FEATURES

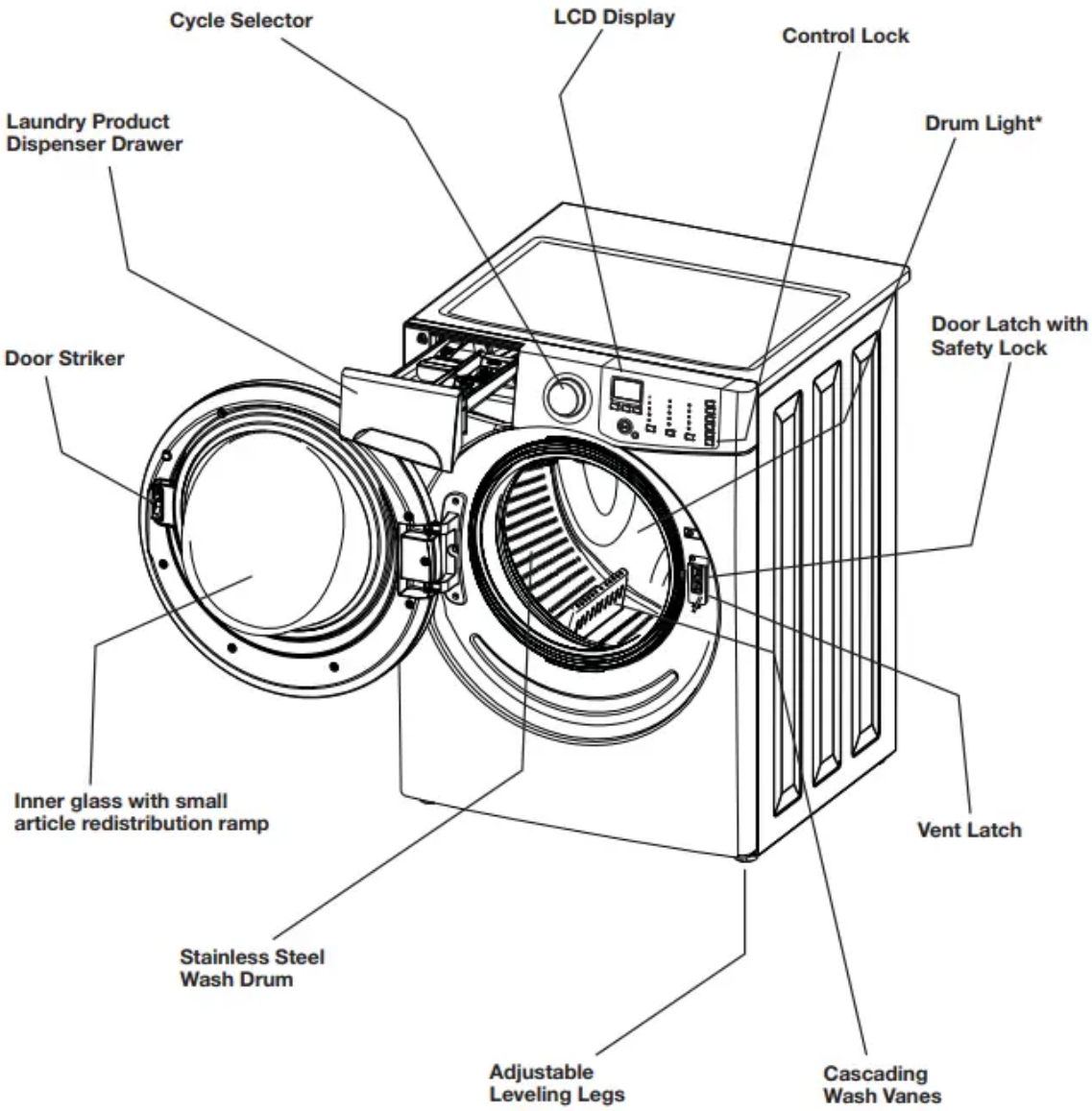
Cycle Selector
LCD Display
Control Lock
Laundry Product
Dispenser Drawer
Drum Light*
Door Latch with
Safety Lock
Door Striker
Inner glass with small
article redistribution ramp
Vent Latch
Stainless Steel
Wash Drum
Adjustable
Leveling Legs
Cascading
Wash Vanes

OPERATING INSTRUCTIONS

Normal Operating Sounds

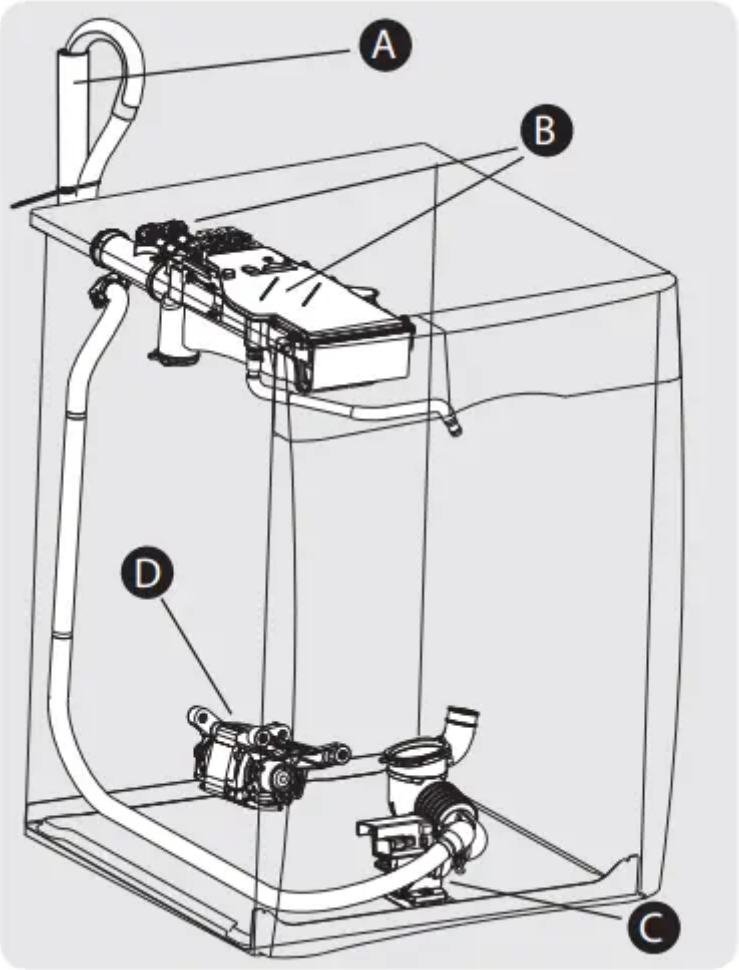

You may or may not hear the following sounds from your new washer:

A. **DRAIN HOSE** The washer has a fl exible drain hose to carry water from the washer to the stand pipe of your home. You will hear water fl owing into your stand pipe. This is a normal part of the operation of the washer.

B. **WATER VALVES/DISPENSER** As water enters the dispenser system, it is common to hear a water fl owing sound. This normal sound will vary slightly based on the water pressure in your home.

C. **DRAIN PUMP** Your washer is equipped with a high velocity drain pump. It is normal to hear humming and gurgling sounds as water is pumped from the washer. Both of these sounds are normal and indicate that your pump is functioning correctly.

D. **HIGH SPEED MOTOR A** powerful motor is used to drive the drum to high spin speeds to extract water from your load. You will hear a sound associated with these higher spin speeds. This sound is normal and will vary slightly as the spin speed varies with load size and cycle selected.

CAUTION

Abnormal, on-going sounds may be an indication of a pending washer failure and should be investigated by a qualifi ed technician.

Operating Your Washer

WARNING

To reduce the risk of fi re, electric shock or injury to persons, read the IMPORTANT SAFETY INSTRUCTIONS in this Use and Care Guide before operating your washer.

1. Sort laundry into loads that can be washed together.
   - Sort items by recommended cycle and water temperature.
   - Separate white, light and colorfast items from dark and non-colorfast items. • Separate items that shed lint from items that attract lint. Casual, synthetic, knit, and corduroy items will pick up lint from towels, rugs, and chenille bedspreads.
   - Separate heavily soiled items from lightly soiled items.
   - Separate lacy, sheer, loosely knit, or delicate items from durable items.
   - Do not machine wash items containing fi berglass. Small particles of fi berglass left in the drum may transfer to fabrics in other loads and cause skin irritation.

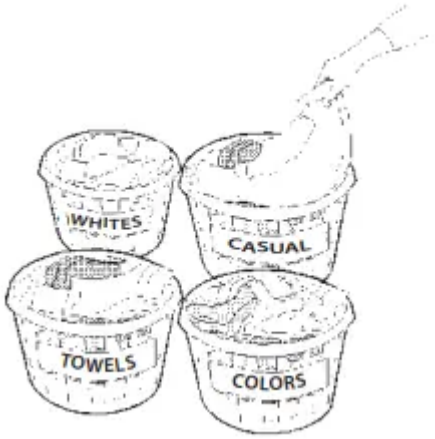

2. Prepare items for washing.
   - Empty pockets.

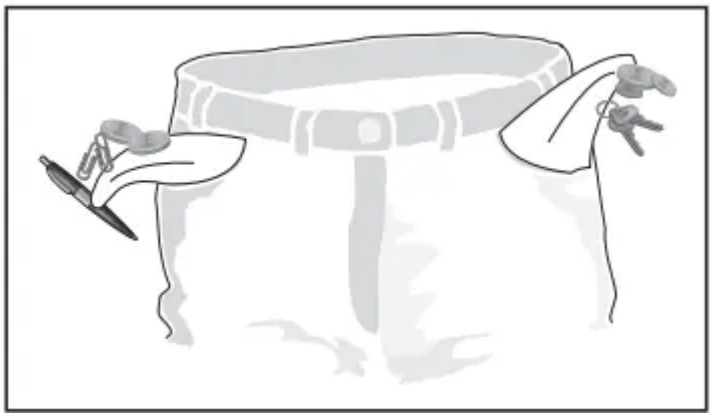

   - Brush off lint and dirt. Shake out rugs and beach towels.

• Close zippers, fasten hooks, tie strings and sashes, and remove non-washable trims and ornaments.
• Mend rips and tears to prevent further damage during washing.
• Turn knit items inside out to prevent pilling.
• Place delicate and small items such as bras, hosiery and baby socks in a mesh bag

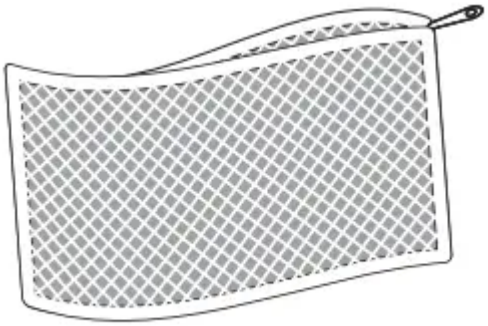

(Mesh bag not included.)

3. Pretreat stains and heavy soil.

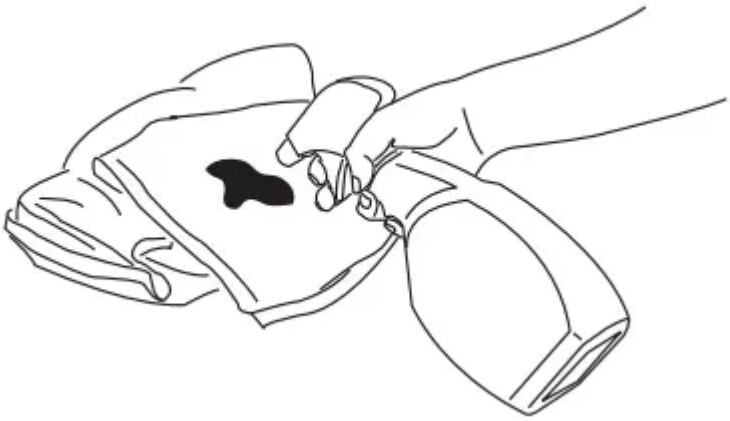

• See Stain Removal Guide in this guide for safe, successful stain removal instructions.

4. Add laundry load to washer.

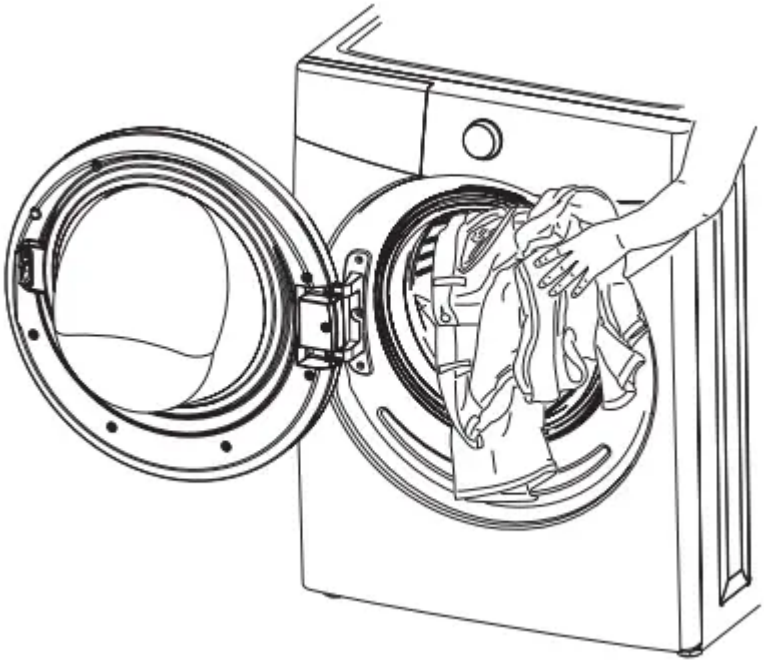

• Combine large and small items in a load.

• Load large items fi rst. Large items should not be more than half the total wash load.

• Washing single items such as a sweater, towel or jeans is ineffi cient and may cause an out-of-balance load. Add 1 or 2 similar items to help balance the load.

• Wash a single heavy item such as a king-sized comforter, bedspread or sleeping bag separately.

• The washer can be fully loaded, but the items should not be tightly packed. The door should close easily

5. Add laundry products to the dispenser.

For best results

Use a low-sudsing, high efficiency detergent to prevent oversudsing in front load washers. Look for this symbol on the detergent label: he

Detergent, liquid chlorine bleach and liquid fabric softener will be dispensed at the proper times in the cycle.

IMPORTANT Open and close the dispenser drawer slowly. Closing the drawer too quickly could result in early dispensing of the bleach or fabric softener.

Use the cap or scoop provided by the detergent manufacturer to measure the amount recommended. Detergent dosage may need to be adjusted for water temperature, water hardness, load size and soil level.

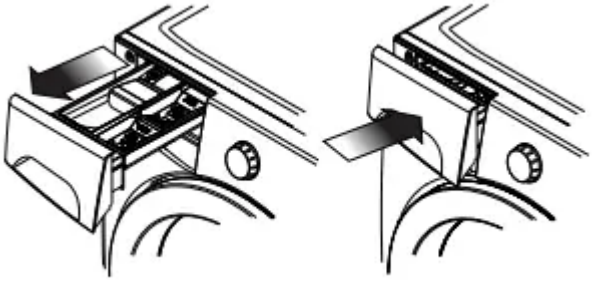

Liquid Detergent

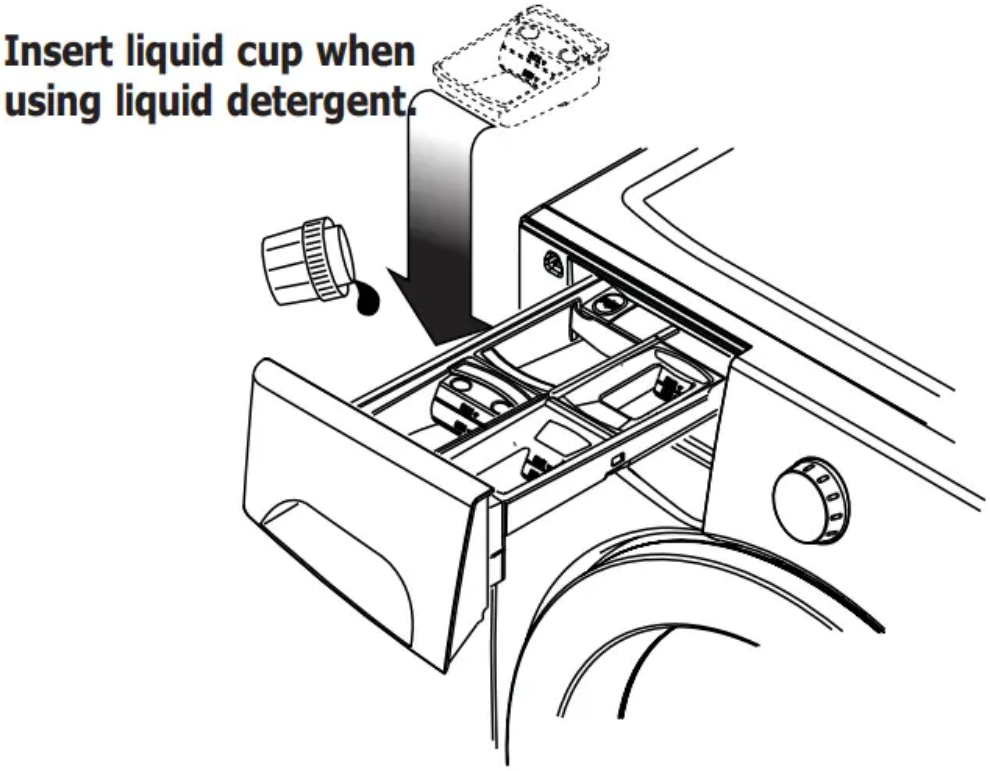

Add the recommended amount of a high effi ciency liquid detergent to the “Main Wash - liquid only” cup.

Do not exceed the MAX fi ll line.

Liquid detergent can also be added directly to the “Main Wash” chamber when not using the “PreWash” option.

NOTE From time to time you may see water in the “Main Wash - liquid only” chamber. This is part of the normal operation of the washer

Powder Detergent

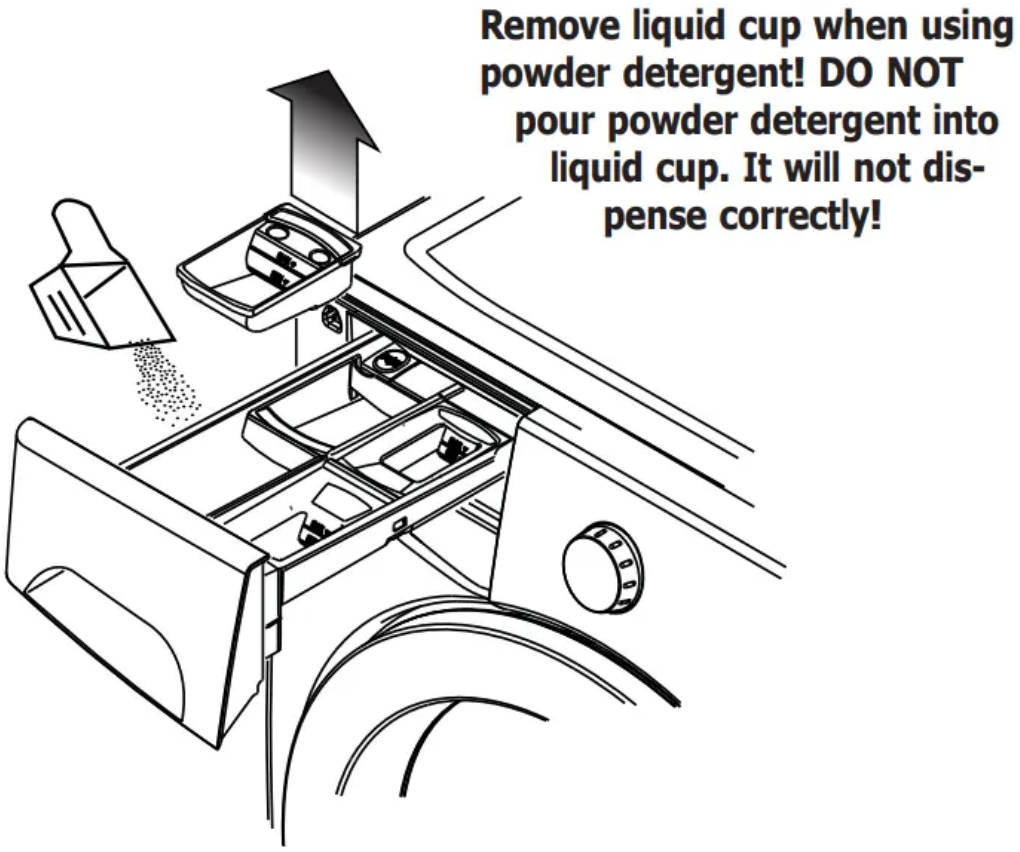

To use a high effi ciency powder detergent, remove the “Main Wash - liquid only” cup and add the powder directly to the “Main Wash” detergent chamber

IMPORTANT Save the liquid cup insert for future use. DO NOT discard it while you are using powder detergent.

Other Wash Products

Color-safe bleach, water conditioner, detergent booster and enzyme products may be added with the detergent.

Put liquid products with liquid detergent in the “Main Wash - liquid only” chamber or powder products with powder detergent in the “Main Wash” detergent chamber

IMPORTANT Do not mix liquids and powders.

Detergent for Prewash

For heavily soiled or stained loads, select the Prewash option and add the recommended amount of detergent to the “Pre-Wash” detergent cup

NOTE From time to time you may see water in the “Main Wash - liquid only”, “Liquid Bleach” and “Fabric Softener” chambers. This is part of the normal operation of the washer.

Liquid Chlorine Bleach

If desired, add liquid chlorine bleach to the chamber labeled “Liquid Bleach” and marked

with this symbol:

Fill to the MIN line for small loads or the MAX line for large loads. DO NOT fi ll above the maximum fill line

IMPORTANT To prevent fabric damage, do not overfi ll the “Liquid Bleach” chamber or pour liquid chlorine bleach directly onto the load.

Add color-safe bleach with the detergent. Liquid Fabric Softener

If desired, pour the recommended amount of liquid fabric softener into the chamber labeled “Fabric Softener” and marked with this symbol:

Fill to the MIN line for small loads or the MAX line for large loads.

DO NOT fi ll above the maximum fill line.

NOTE To prevent staining, do not overfi ll the “Fabric Softener” chamber or pour liquid fabric softener directly on the wash load.

Use of a fabric softener-dispensing ball is not recom mended in tumble action washers.

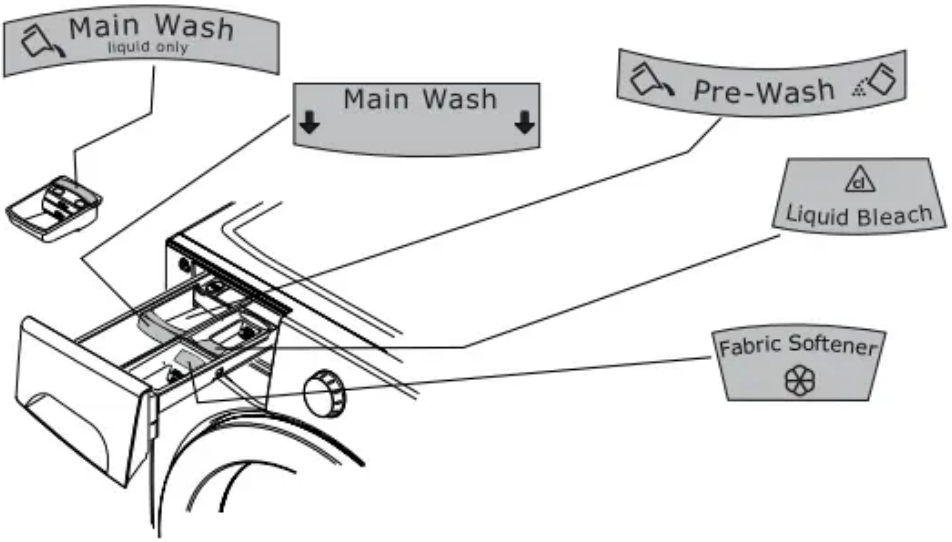

6. Select the appropriate cycle and settings for the load.
   • Turn the cycle selector knob in either direction to select the cycle desired. The indicator for that cycle will be illuminated.
   • The estimated cycle time, suitable wash and rinse water temperatures, fi nal spin speed, soil level, and options for each cycle will be indicated for the cycle selected. See the “Washer Settings Chart” for more details.
   • To change the settings, press the Temp, Spin Speed and Soil Level buttons to scroll to the desired settings.
   • To select or delete an option, press the button for that option. The indicator will be illuminated when the option has been selected. The indicator will no longer be lighted when the option has been deleted.
   NOTE To provide the best care for your laundry, not every setting or option is available

with every cycle. If a setting or option is not available for the cycle selected, the indicator will not light.

• Adjustments to a cycle will be remembered and re called each time that cycle is selected in the future.

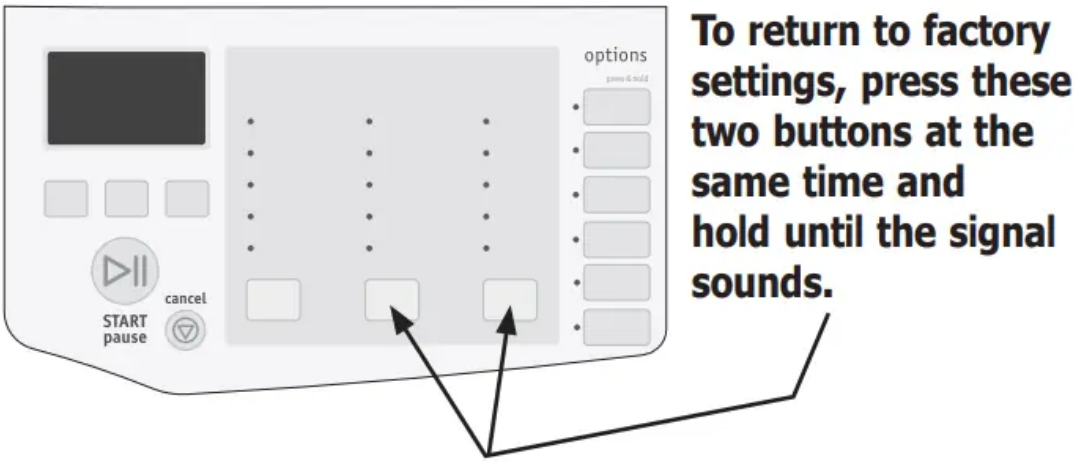

7. Start the washer.

• Close the door and press Start. The washer will not operate with the door open. “DOOR OPEN” will be displayed as a reminder to close the door.

• Select Delay Start to delay the beginning of the cycle, if desired.

• As a safety measure, the door will automatically lock during the entire wash cycle.

• To add a forgotten item to the washer any time during the wash portion of the cycle, press Pause. When the door unlocks, open the door, add the item, close the door and press Start to resume the cycle

• If changes to the settings or options are attempted after the cycle starts, you will hear several beeps when the buttons are pressed. To change the settings or options, press Pause, make the new selections and press Start again.

• To change the cycle once the cycle has begun, press Cancel, select a new cycle, and press Start again. Just turning the cycle selector knob will not change the cycle.

• To stop the cycle, press Cancel.

NOTE If the cycle is interrupted during spin, it will take approximately 2-3 minutes for the door lock to release. DO NOT force open the door.

• A signal will sound at the end of the cycle if the Chime option has been selected.

• Remove items from the washer when the cycle ends and place in dryer, line dry or dry fl at as directed on the fabric care label.

• Excess wrinkling, color transfer or odors may develop in items left in the washer after the cycle has ended, if not removed promptly

CAUTION: ENTRAPMENT and TIP-OVER HAZARD

Do not leave the door open if there are small children or pets present. An open door could entice children to hang on the door or crawl inside the washer. If there are no small children present, you may leave the door ajar to prevent odor build up.

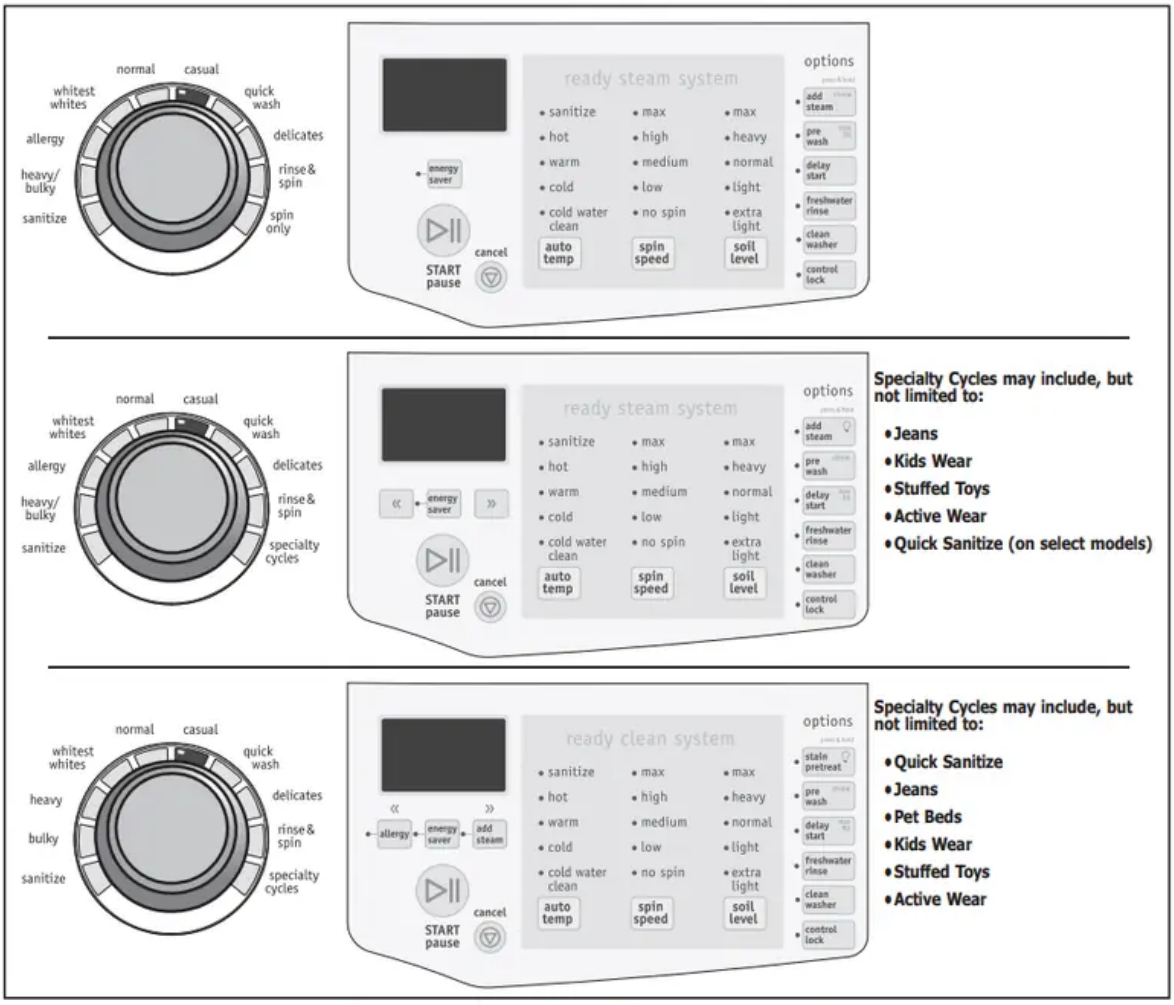

This manual covers many models and not all cycles, options, or features listed are available on every model. Consoles shown above for reference only. Your model may differ.

Cycle Selection

Turn the cycle selector in either direction to the cycle desired. The indicator for that cycle will be illuminated. To change the cycle once it has begun, press the cancel button before selecting a new cycle. Just turning the cycle selector knob to another selection will not change the cycle.

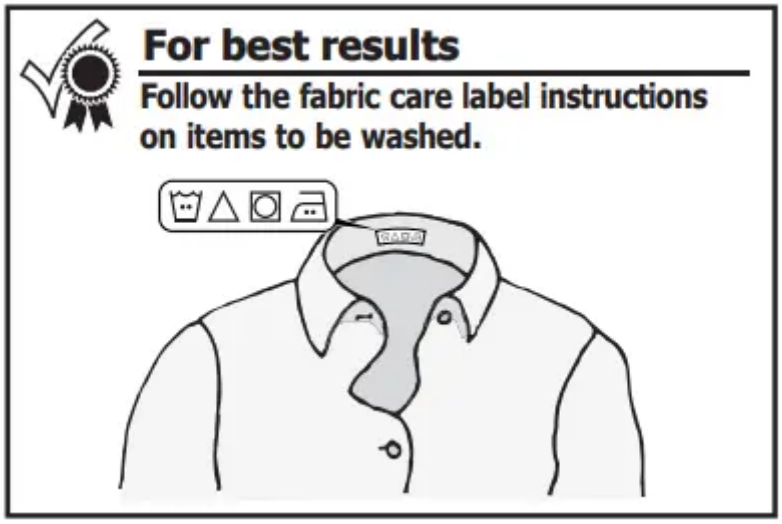

Sanitize

Use the Sanitize cycle to clean and sanitize heavily soiled, colorfast fabrics including towels, bedding, and children's clothing. Very hot water, all spin speeds, all Soil Levels except light and extra light, and all options except Prewash, Energy Saver and Stain Pretreat (on select models) are available with this cycle. It is recommended that you set your water heater to 120° F (49° C) or higher to ensure proper performance during this cycle. If the setting is lower or the load is extra large, the cycle time will be extended by 30 minutes or more. The Sanitize cycle will kill 99.9% of bacteria with no carryover of bacteria between loads. No bleach or harsh chemicals are needed, but higher temperatures are required. Please check fabric care labels to prevent damage.

NOTE This cycle has been certifi ed by NSF International, an independent third party testing and certifi cation organization dedicated to public health, safety and environmental protection.

NSF Protolcol P172
Sanitization Performance of Residential and Commercial, Family-Sized Clothes Washers

The wash water is heated by an internal boost heater to a maximum of 152° F (67° C) as the load tumbles. Cold water is added to cool down the load prior to drain and spin.

NOTE If the voltage at your outlet is under 110 v, the internal heater may not adequately heat the wash water. If the cycle is interrupted while the water is heating, the fi nal temperature of the wash water may be lower and sanitation may be reduced.

As a precaution, the washer door is locked once the water temperature reaches 130° F (55° C). If the cycle is cancelled during the wash phase and the water temperature is greater than 150° F (66° C), an automatic cool down and drain will occur before the door can be opened. Bulky (on select models) This cycle is designed for bulky items such as comforters, blankets, mattress pads, sleeping bags and similar items. Ten minutes of normal reversing tumble wash action are followed by 5 minutes of gentle tumbling, 2 rinses and a fi nal spin. Fresh Water Rinse and Stain Pretreat (on select models) are available with this cycle.

Heavy/Bulky (on select models) The Heavy/Bulky cycle provides 20 minutes of reversing tumble wash action for heavily soiled items. Hot water is recommended to remove heavy soil and most stains. Stain Pretreat (on select models), Fresh Water Rinse, and Energy Saver are available options.

Heavy (on select models) The Heavy cycle provides 20 minutes of reversing tumble wash action for heavily soiled items. Hot water is recommended to remove heavy soil and most stains. Stain Pretreat (on select models), Fresh Water Rinse, and Energy Saver are available options.

Allergy (on select models) If you have asthma or allergy sufferers in your home, use this cycle to combine hot water temperature (boosted with internal heater), fast speed tumbling and multiple rinses to help ensure the destruction of dust mites and removal of pet dander.

NOTE This cycle has been certifi ed by NSF International, an independent third party testing and certifi cation organization dedicated to public health, safety and environmental protection.

NSF Protolcol P351
Allergen Reduction Performance
of Residential and Commercial,
Family-Sized Clothes Washers

The Allergy cycle will kill all dust mites and eliminate at least 95% of pet dander. Since higher temperatures are required, please check fabric care labels to prevent damage.

Whitest Whites

The Whitest Whites cycle provides 15 minutes of tumble wash action followed by two rinses. Use this cycle to clean soiled white fabrics with the addition of bleach. Hot water is recommended to ensure optimal bleach activation. For peak rinsing performance and to avoid chlorine residues on your laundry add a Fresh Water Rinse to this cycle. All options except Sanitize wash and Light soil are available, including Energy Saver.

Normal

The Normal cycle provides 15 minutes of reversing tumble wash action for normally soiled loads. Stain Pretreat (on select models), Fresh Water Rinse, and Energy Saver are available options. All wash temperatures except Sanitize (on select models) and all soil levels are available.

Casual

Casual cycle provides 10 minutes of reversing tumble wash action for cottons and blends with a no-iron fi nish followed by a Cool Down rinse, 2 additional rinses and a fi nal spin. Fresh Water Rinse and Stain Pretreat (on select models) can be selected.

Quick Wash

The Quick Wash cycle provides 5 minutes of reversing tumble action to quickly wash small, lightly soiled loads in 20 minutes. A warm wash/cold rinse is available and you can choose between Max and High spin speeds.

Delicates

This cycle provides 10 minutes of gentle reversing wash action for knits and delicates. To protect your delicate items, Hot water wash and Heavy Soil options are not available. The Stain Pretreat (on select models) and Fresh Water Rinse options are available.

Jeans (on select models) Wash an entire load of denim jeans with the Jeans cycle. It provides 20 minutes of reversing tumble wash action with Auto Temp Cold water, Medium Spin Speed to reduce wrinkling and a Freshwater Rinse to remove excess dirt and detergent.

Rinse & Spin

Select Rinse & Spin for loads that need a cold water rinse or to add fabric softener that may have been omitted in a regular cycle. Add the fabric softener to the dispenser chamber. Select the spin speed appropriate for the load.

Spin Only (on select models)

Use the Spin Only cycle anytime you want to drain water from the washer and spin out the load or as a follow-up to a No Spin selection. Select the spin speed appropriate to the load.

Specialty Cycle Selection

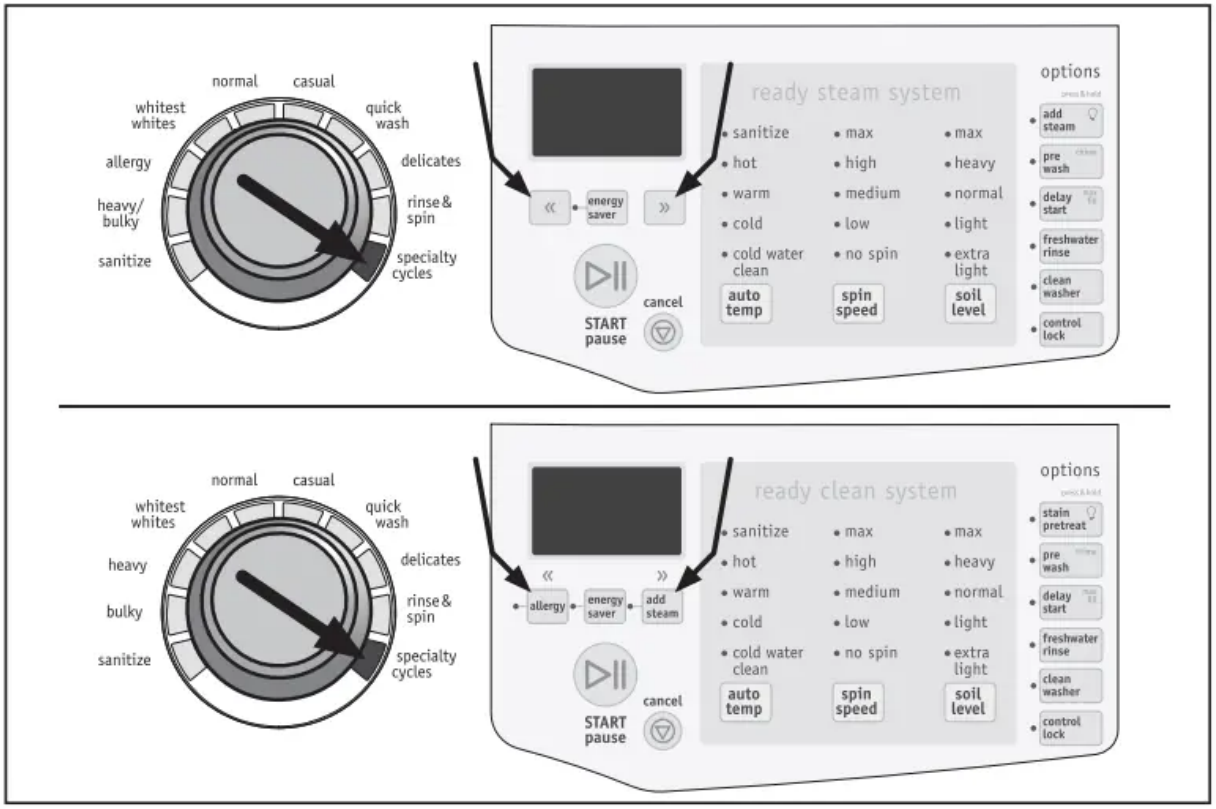

Specialty Cycles (on select models)

Turn the cycle selector to Specialty Cycles to access additional custom cycles. Scroll through the cycles by pressing the outer buttons under the LCD screen.

Jeans

Wash an entire load of denim jeans with the Jeans cycle. It provides 20 minutes of reversing tumble wash action with Auto Temp Cold water, Medium Spin Speed to reduce wrinkling and a Freshwater Rinse to remove excess dirt and detergent.

Quick Sanitize (on select models)

Use the Quick Sanitize cycle to quickly kill 99.9% of bacteria with no carryover of bacteria between loads. No bleach or harsh chemicals are needed, but higher temperatures are required. Please check fabric care labels to prevent damage.

NOTE This cycle has been certifi ed by NSF International, an independent third party testing and certifi cation organization dedicated to public health, safety and environmental protection.

NSF Protolcol P172
Sanitization Performance of Residential and Commercial, Family-Sized Clothes Washers

Kids Wear

Wash normally-soiled kids wear and baby wear with this specialty cycle. Freshwater Rinse, High Spin Speed and Auto Temp Hot water are default presets. Allergy will also be selected as an option if available on your model.

Pet Beds (on select models)

Wash soft-sided pet beds, pet pillows or pet blankets with the Pet Beds cycle. The Allergy option will kill dust mites and eliminate 95% of pet dander with multiple rinses. Auto Temp Cold water to release protein stains, Freshwater Rinse and High Spin Speed to extract more water (reducing drying time) are preset selections. Not recommended for wool or fl eece fabrics.

IMPORTANT Remove as much of pet hair as possible with vacuum, pet hair roller or brush to prevent clogging washer drain pump.

Stuffed Toys

Wash stuffed animals and soft toys with the Stuffed Toys cycle. Wash temperature is Auto Temp Cold, with a mid-agitation injection of steam to release stubborn stains. Freshwater Rinse and Slow Spin Speed to prevent deformation of toys are also preset selections. Protect your washer drum fi nish and maximize toy life by placing it in a pillow case and tying the end closed before washing it.

Active Wear

The Active Wear cycle provides 5-17 minutes of reversing tumble wash action for lightweight, synthetic athletic apparel. All temperatures except Sanitize and hot and all spin speeds and soil levels are available with this cycle.

Cycle Settings

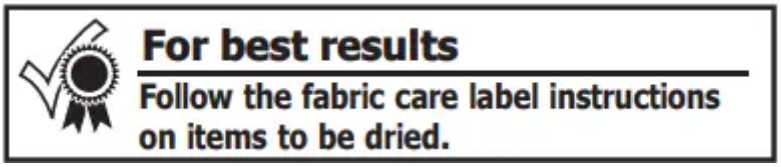

Appropriate wash temperature, spin speeds, soil level and options will automatically be displayed for each cycle. The settings can be changed before the cycle is started.

WASH WATER TEMPERATURE

To change the preset temperature, press the Temp button to scroll to the desired setting. Select a wash water temperature according to fi ber content, colorfastness and soil level. A cold water rinse saves energy and reduces wrinkling.

To protect your fabrics, not all temperatures are available with every cycle. The indicator will not light if the setting is not available with that cycle.

The temperature selected for the cycle will be remembered and recalled each time that cycle is selected in the future.

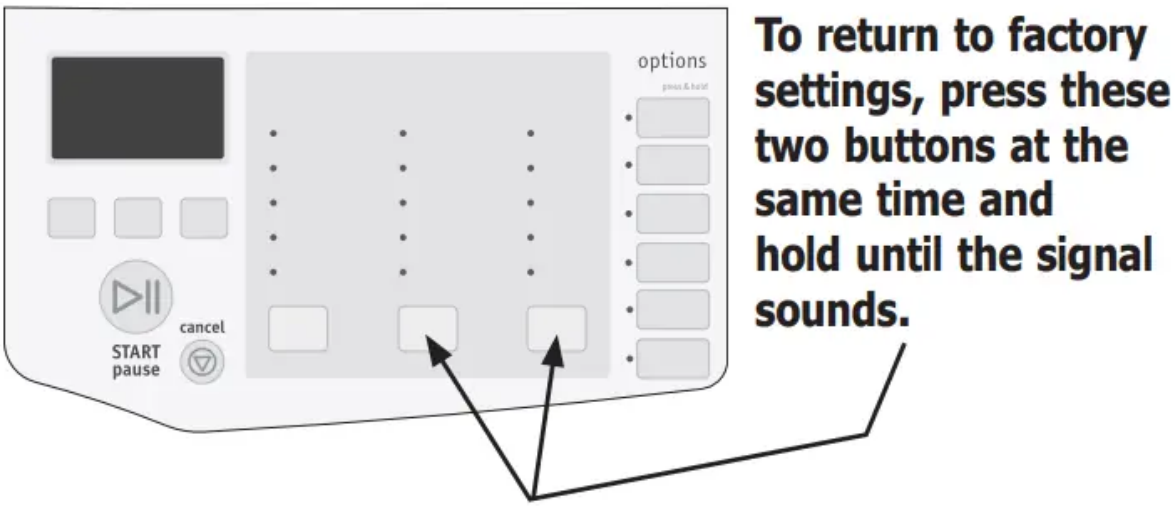

NOTE To change the temperature once the cycle has begun, press the Pause button, make the new selection and press Start again.

Auto Temp wash water temperatures are automatically regulated to maximize detergent effectiveness and improve washing performance. The water heater setting and its distance from the washer, water usage in other parts of the home, and seasonally low ground water temperature in some geographic areas can affect water temperature.

Sanitize

This setting sanitizes heavily soiled colorfast fabrics such as towels, bedding, and children's clothing by killing 99.9% of bacteria using wash water heated with a boost heater to 152° F (67° C). Cold water is used to cool and rinse the load.

NOTE This setting has been certifi ed by NSF International, an independent third party testing and certifi cation organization dedicated to public health, safety and environmental protection.

NSF Protolcol P172
Sanitization Performance of Residential and Commercial, Family-Sized Clothes Washers

Auto Temp Hot

Use this setting for heavily soiled white or colorfast cottons and blends.

Auto Temp Warm

Use this setting for normally soiled white or colorfast cottons or blends.

Auto Temp Cold

Some warm water will automatically blend with cold tap supply to achieve a precise Auto Temp Cold. Use this setting for lightly soiled non-colorfast items, knits, delicates, and hand washables.

Cold Water Clean

Wash and rinse temperatures are equivalent to temperature of cold tap supply. Use this selection for fabrics and colors that are prone to dye transfer. For use with cold water detergents.

SPIN SPEED

Max, High, Medium and Low spin speeds are available for each cycle. The spin speed and/or duration of fi nal spin vary from model to model and cycle to cycle.

Increasing the spin speed will extract more water, decrease drying time and conserve energy. Decreasing the spin speed will reduce wrinkling.

Select Low spin speed to gently spin items that should be line dried.

Use No Spin to omit the fi nal spin at the end of the cycle. The load will be very wet. Remove items from the wash drum to drip dry or select a Spin Only or Rinse and Spin cycle to remove excess water at a more convenient time.

SOIL LEVEL

Adjust the wash time in 3-minute increments based on the soil level of each load. Max, Heavy, Normal, Light and Extra Light soil levels are available.

Cycle Options

To add options, press the corresponding options buttons to illuminate the selections desired. To delete options, press the options buttons again and the indicator lights will turn off. Some Options require a “Press & Hold” effort to activate or deactivate the secondary function.

Not all options are available on every model. To protect your fabrics, not all options are available with every cycle. If an option is not appropriate for the cycle, the indicator will not light. Occasionally, a setting and option in the same cycle will confl ict with each other, like Add Steam and Energy Saver. When this happens, the option selected fi rst will cause the confl icting option to not be selectable.

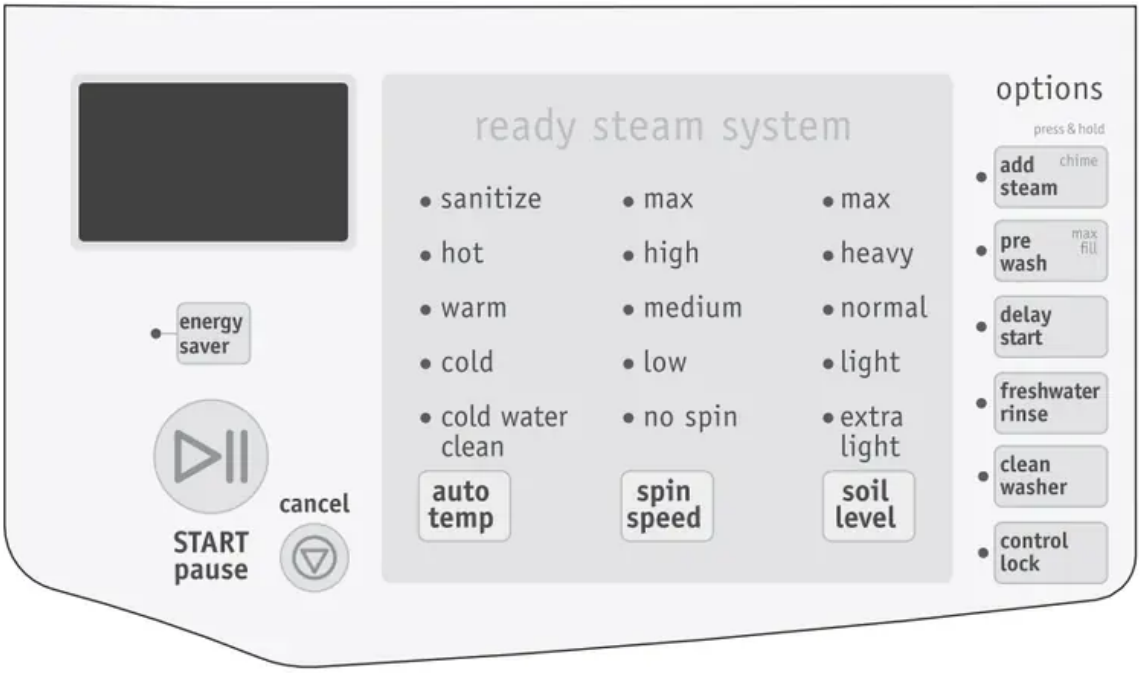

NOTE To change the Options after the cycle starts, press Pause, adjust the setting and press Start to resume the cycle.

Allergy (on select models)

If you have asthma or allergy sufferers in your home, add this option to combine hot water temperature (boosted with internal heater), fast speed tumbling and multiple rinses to help ensure the destruction of dust mites and removal of pet dander.

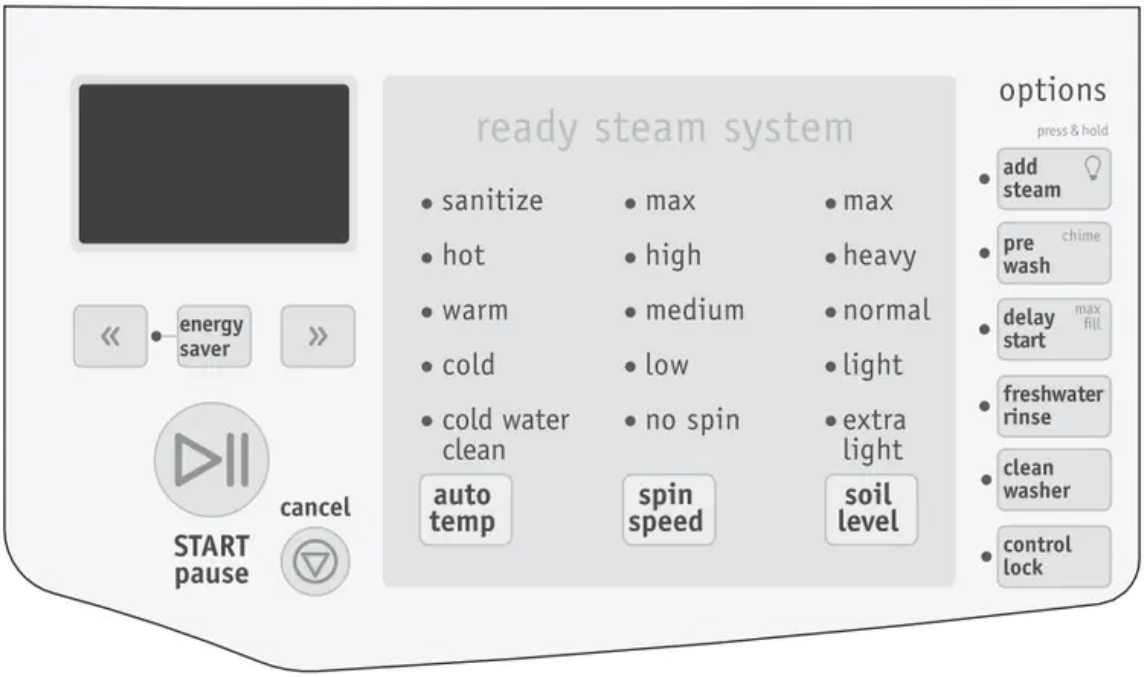

NOTE This option has been certifi ed by NSF International, an independent third party testing and certifi cation organization dedicated to public health, safety and environmental protection.

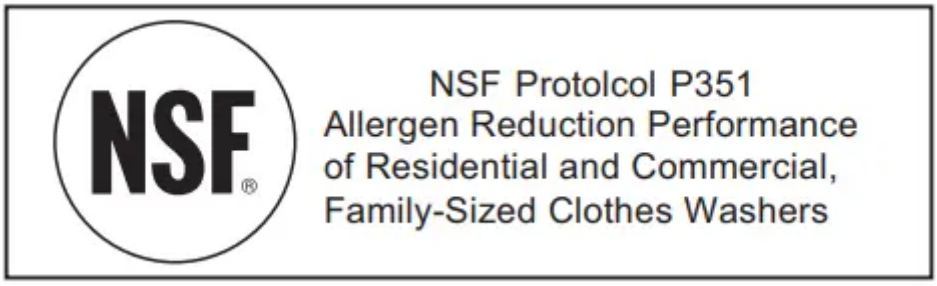

The Allergy option will kill all dust mites and eliminate at least 95% of pet dander. Since higher temperatures are required, please check fabric care labels to prevent damage.

Energy Saver

The Energy Saver option reduces the warm water temperature a few degrees to save energy and also extracts more water to reduce drying time. On some models, you may also notice after the cycle begins most lights and indicators will turn off. To turn those lights temporarily back on press Energy Saver during the cycle.

Add Steam

Select this option to add approximately 20 minutes of tumbling in steam during the wash cycle. It is recommended for heavily soiled loads to help enhance the release of tough stains from fabrics after initial agitation. It is available with all cycles except Delicates, Quick Wash, Rinse & Spin and Spin Only.

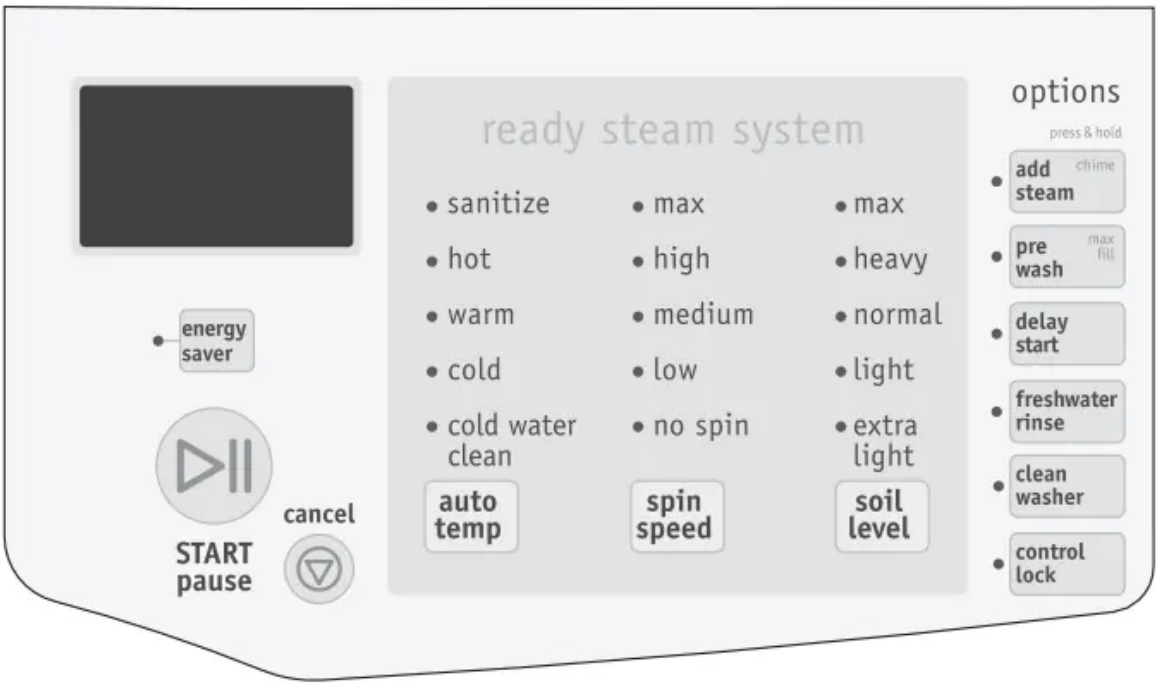

NOTE

- Steam may not necessarily be visible inside drum during a steam wash cycle.

- Steam may not be present during entire steam wash cycle.

IMPORTANT

- If steam is selected, rinse temperatures will be elevated.
- If washer is paused during a steam wash cycle, the door will remain locked due to higher temperature in drum. DO NOT force open - it will unlock upon cooling.
- During a steam cycle you may notice steam exiting from the rear vent of the washer - this is normal and not cause for alarm.

Drum Light (Press & Hold on some models)

The drum light will come on whenever the door is opened to illuminate the drum during loading and unloading. Closing the door turns off the light. The drum light will automatically turn off if the door is left open more than 3 minutes.

On models with Press & Hold features, you can activate the drum light during a cycle by pressing and holding the button under Options with the symbol. The light will stay on during the cycle for 3 minutes. To turn it off, press and hold the button again.

Stain Pretreat (on select models)

Stain Pretreat uses a special 10 minute soak/pretreat agitation before the main wash. It fi lls initially with detergent and cold water to prevent protein stains from setting, then the internal heater is activated to heat the wash water to remove non-protein based stains. Can be used with Prewash for the toughest stains.

Pre Wash

Select this option to add a short initial wash period to a cycle. Heavily soiled and stained loads will prewash for approximately 5 minutes. The water will drain and the load will automatically advance to the regular wash cycle. See step 5 in “Operating Your Washer” section in this guide for details on adding detergent to the dispenser.

Chime (Press & Hold)

A signal will sound at the end of the cycle if this option is selected.

Delay Start

Press Delay Start to select a wash time convenient to your schedule or during off peak energy hours. The delay time selected will be displayed and begin counting down when you select Start.

Max Fill (Press & Hold)

Increase the water fi ll level of the agitation portion of any wash cycle.

Freshwater Rinse

Use this option when additional rinsing is desired to remove excess dirt and detergent. It is recommended for heavily soiled loads or if household members have sensitive skin.

Clean Washer

To clean and freshen the washer, perform the Clean Washer cycle. If you wish to begin the cycle, press select when prompted. This maintenance cycle uses hot water and two rinses to remove residue that may cause odor. See “Inside Routine Cleaning (Preventative)” for detailed information about the Clean Washer cycle.

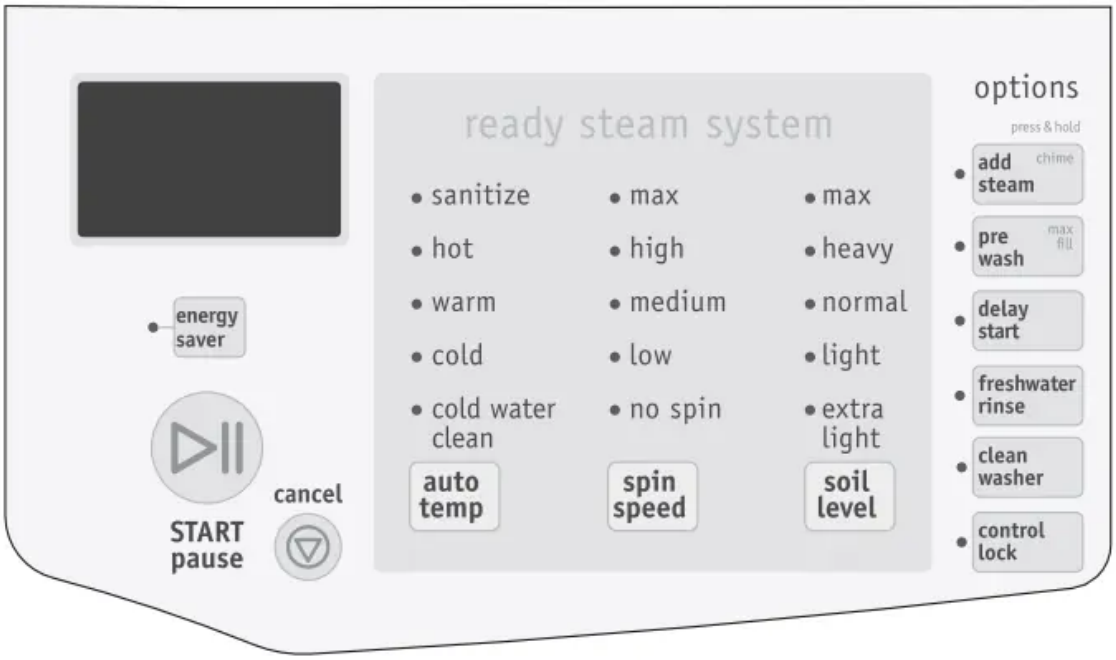
ready steam system
sanitize
hot
warm
cold
cold water clean
max
high
medium
low
no spin
max
heavy
normal
light
extra light
auto temp
spin speed
soil level
options
press & hold
add steam
chime
pre wash
max fill
delay start
freshwater rinse
clean washer
control lock
energy saver
START pause
cancel

ready steam system
sanitize
hot
warm
cold
cold water clean
max
high
medium
low
no spin
max
heavy
normal
light
extra light
auto temp
spin speed
soil level
options
press & hold
add steam
pre wash
chime
delay start
max fill
freshwater rinse
clean washer
control lock
«
energy saver
»
START pause
cancel

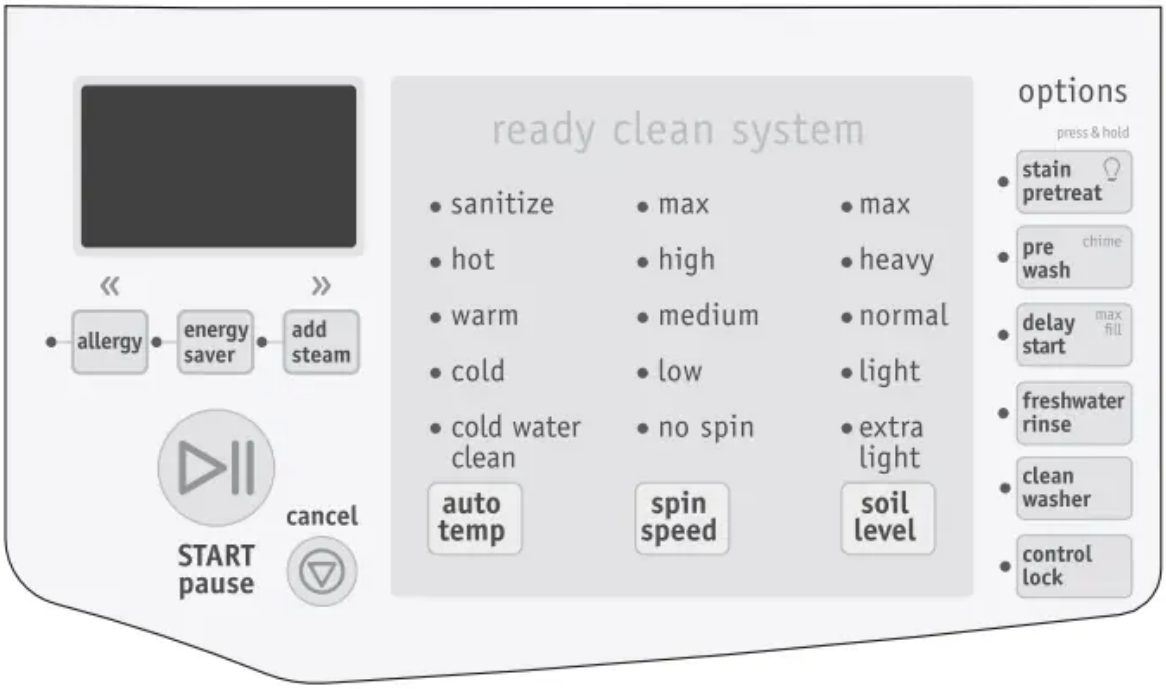

NOTE The washer will automatically prompt you to run the Clean Washer cycle every 50 cycles. You may press the Cancel button to manually perform the cycle at another time.

Control Lock

To lock the controls between cycles, press and hold the Control Lock button for 5 seconds. Repeat to unlock the controls when you are ready to operate the washer. Use this feature to reduce the likelihood of accidental operation by children.

Other Features

Status Display/Status Lights

The estimated total cycle time will be displayed when the cycle is selected. The time may increase if water pressure is low, oversudsing occurs or the load becomes unbalanced. The approximate time remaining will be displayed during the cycle.

A situation where oversudsing has been detected by the washer will result in the washer automatically adding up to 4 extra rinses to attempt to clear the suds. Each extra rinse the washer performs to clear the suds will add 5 minutes to the cycle display time. If an excessive amount of detergent has been added and additional rinsing has not corrected the issue, “TOO MUCH DETERGENT” will be displayed.

Vent Latch

Help prevent odor buildup and mildew between washes by utilizing your washer’s vent latch feature. To apply the vent lock, (1) open the door slightly, (2) lift the latch arm and then (3) press the arm down onto the plastic door strike, snapping it in place. The vent latch can be released

either of two ways - by pulling door out and manually returning latch arm to lower position or by pushing door shut and allowing latch arm to continue its pivot upward.

STATUS DISPLAY

The following will also be displayed at the appropriate times during the cycle:

DOOR LOCK	RINSING
PREWASHING	DRAINING
WASHING	SPINNING
ADDING STEAM	CYCLE COMPLETE

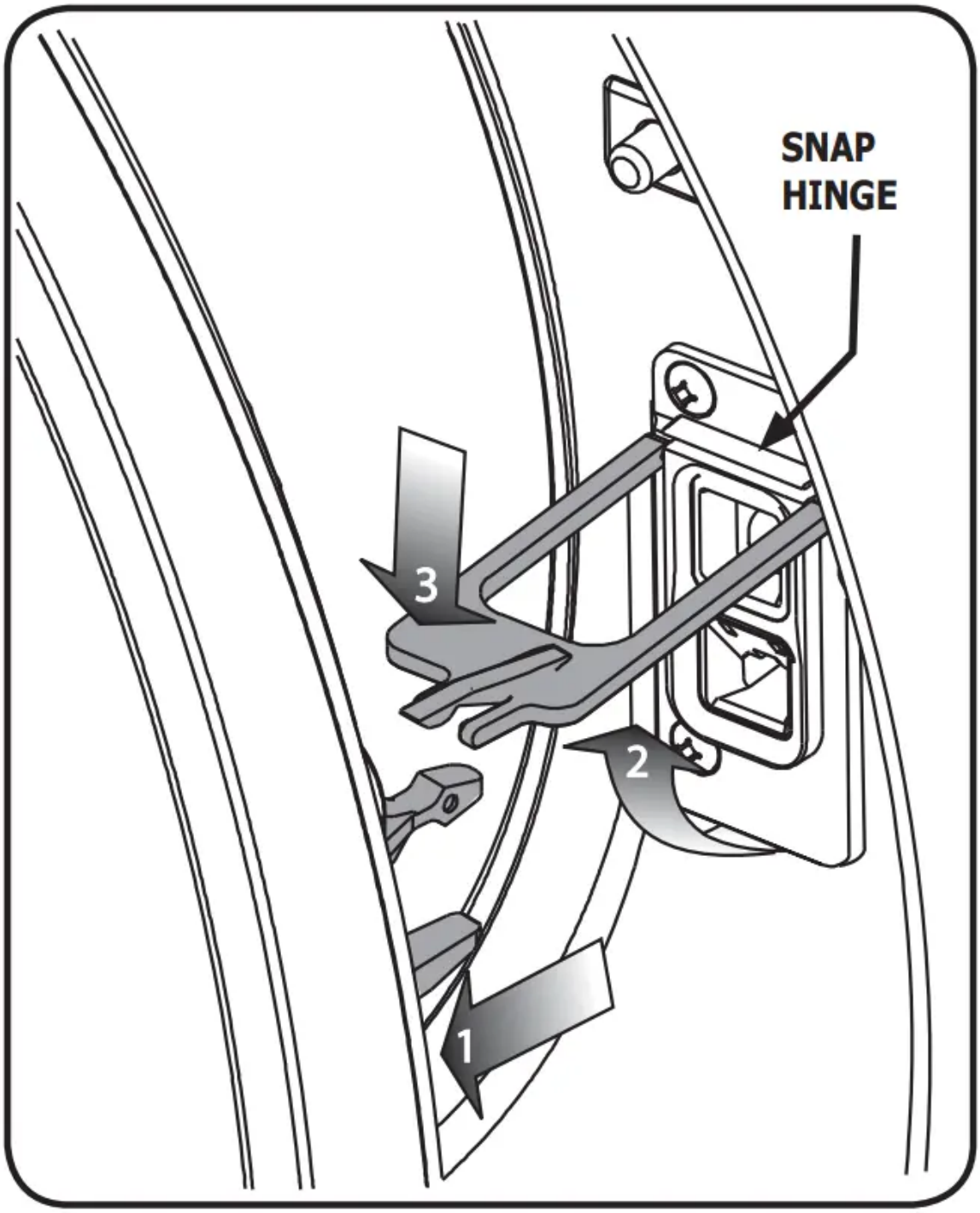

IMPORTANT Do not attempt to close door if vent latch arm is disengaged and arm is in an outward position. Return latch arm to lower position before closing and latching the door.

NOTE The vent latch may become dislodged from hinge point if door closure is attempted while latch arm is not in an acceptable closing position. The latch arm can be snapped back in at the hinge location. Washer will still operate without latch arm installed.

Clean Washer Cycle

TO REFRESH OR CLEAN INSIDE OF WASHER

To clean and freshen the washer, perform the Clean Washer cycle. For best results use the Clean Washer cycle once a month. To begin the cycle, press Select when prompted during automated reminder mode or manually select the cycle by following these directions: Rotate cycle knob to Rinse & Spin (or Spin Only, if your models does not have Rinse & Spin cycle). Then press the Clean Washer option button. The LCD screen will display “SYSTEM CLEAN”.

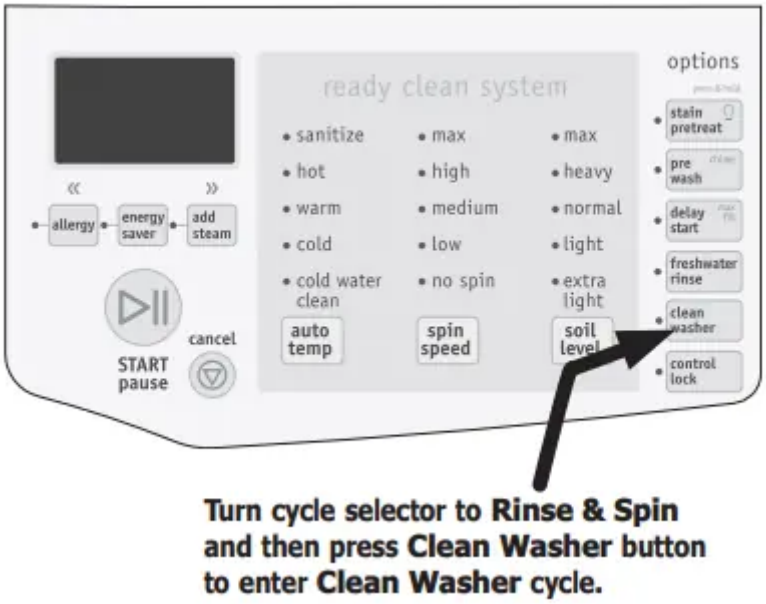

NOTE The washer will automatically prompt you to run the Clean Washer cycle every 50 cycles. You may press the Cancel button to manually perform the cycle at another time.

IMPORTANT Items left in washer while performing the Clean Washer cycle will cause a severe out-of-balance situation that could damage the washing machine.

If installed, remove the “MAIN WASH - LIQUID ONLY” cup from the dispenser. REMOVE ALL ITEMS FROM WASH DRUM before fi lling the detergent chamber with one (1) cup of liquid chlorine bleach OR one (1) pouch of TIDE® WASHING MACHINE CLEANER. DO NOT use both. Press Start to begin.

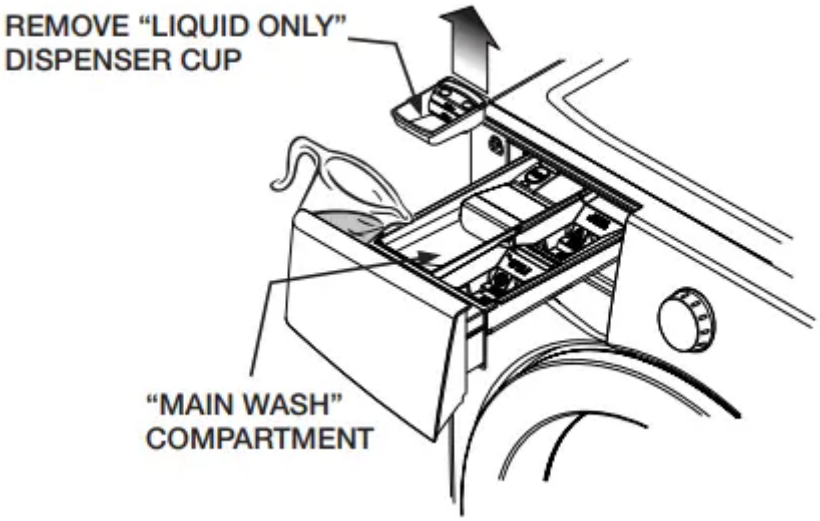

For best results

Immediately follow up with a Spin Only cycle. Select Extra Rinse on Max Spin Speed with no detergent or bleach to help clear any residual bleach left after the Clean Washer cycle.

NOTE If the Clean Washer cycle is cancelled or paused during the cycle, the washer will go through 2 rinse cycles to clean the drum of any residual bleach before unlocking the door.

WARNING

HARMFUL VAPOR HAZARD

Do not use or mix liquid chlorine bleach with other household chemicals such as toilet cleaners, rust removers, acid or products containing ammonia. These mixtures can produce dangerous fumes which can cause serious injury or death.

WASHER SETTINGS CHART

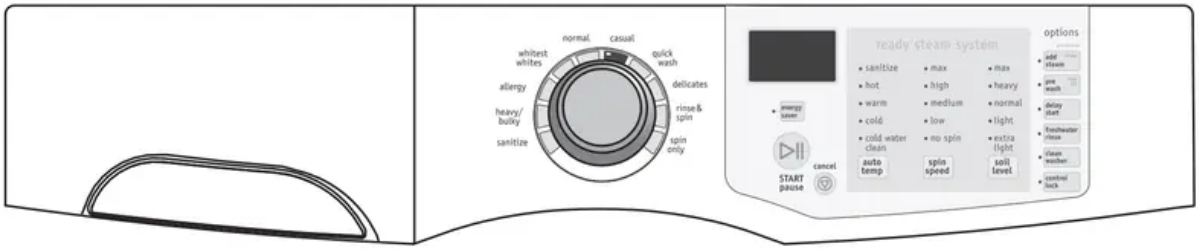

These Temperature, Spin Speeds, Soil Levels and Options are available with the following cycles:

	Sanitize	Heavy/Bulky	Allergy	Whitest Whites	Normal	Casual	Quick Wash	Delicates	Jeans (on select models)	Rinse & Spin	Spin Only
Auto Temp											
Sanitize	✓										
Hot		✓	✓	✓	✓						
Warm		✓		✓	✓	✓	✓	✓	✓		
Cold		✓			✓	✓	✓	✓	✓		
Cold Water Clean		✓			✓	✓	✓	✓	✓	✓	✓[1]
Spin Speed											
Max	✓	✓	✓	✓	✓		✓		✓	✓	✓
High	✓	✓	✓	✓	✓	✓	✓		✓	✓	✓
Medium	✓	✓	✓	✓	✓	✓		✓	✓	✓	✓
Low	✓		✓	✓	✓	✓		✓	✓	✓	✓
No Spin					✓	✓		✓	✓	✓	✓
Soil Level											
Max	✓	✓	✓	✓	✓				✓		
Heavy	✓	✓	✓	✓	✓	✓			✓		
Normal	✓	✓	✓	✓	✓	✓		✓	✓		
Light				✓	✓	✓	✓	✓	✓		
Extra Light				✓	✓	✓	✓	✓			
Options											
Energy Saver		✓		✓	✓	✓			✓		
Add Steam	✓	✓	✓	✓	✓	✓			✓		
Pre Wash		✓		✓	✓				✓		
Delay Start	✓	✓	✓	✓	✓	✓	✓	✓	✓	✓	✓
Freshwater Rinse	✓	✓	✓	✓	✓	✓	✓	✓	✓		✓[1]
Clean Washer										✓	✓[1]
Control Lock	✓	✓	✓	✓	✓	✓	✓	✓	✓	✓	✓
Press & Hold Chime	✓	✓	✓	✓	✓	✓	✓	✓	✓	✓	✓
Press & Hold Max Fill	✓	✓	✓	✓	✓	✓	✓	✓	✓		

✓Available selections / ✓[1]Available on certain models only
Shaded areas represent factory presets.

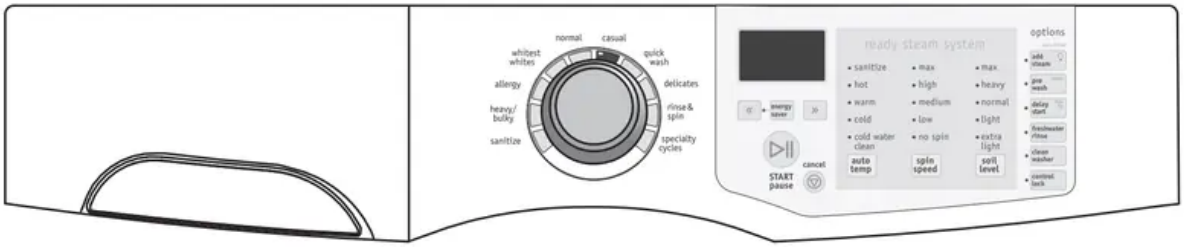

These Temperature, Spin Speeds, Soil Levels and Options are available with the following cycles:

	Sanitize	Heavy/Bulky	Allergy	Whitest Whites	Normal	Casual	Quick Wash	Delicates	Rinse & Spin	Specialty Cycles: Quick Sanitize (select models)	Specialty Cycles: Jeans	Specialty Cycles: Kids Wear	Specialty Cycles: Stuffed Toys	Specialty Cycles: Active Wear
Auto Temp														
Sanitize	✓									✓				
Hot		✓	✓	✓	✓							✓		
Warm		✓		✓	✓	✓	✓	✓					✓	
Cold		✓			✓	✓	✓	✓			✓			✓
Cold Water Clean		✓			✓	✓	✓	✓	✓					
Spin Speed														
Max	✓	✓	✓	✓	✓		✓		✓	✓				✓
High	✓	✓	✓	✓	✓	✓	✓		✓			✓		
Medium	✓	✓	✓	✓	✓	✓		✓	✓		✓			
Low	✓		✓	✓	✓	✓		✓	✓				✓	
No Spin					✓	✓		✓	✓					
Soil Level														
Max	✓	✓	✓	✓	✓									
Heavy	✓	✓	✓	✓	✓	✓								
Normal	✓	✓	✓	✓	✓	✓		✓				✓	✓	✓
Light				✓	✓	✓	✓	✓			✓			
Extra Light				✓	✓	✓	✓	✓		✓				
Options														
Energy Saver		✓		✓	✓	✓								
Add Steam	✓	✓	✓	✓	✓	✓							✓	
Pre Wash		✓		✓	✓									
Delay Start	✓	✓	✓	✓	✓	✓	✓	✓	✓	✓	✓	✓	✓	✓
Freshwater Rinse	✓	✓	✓	✓	✓	✓	✓	✓	✓		✓	✓	✓	
Clean Washer									✓					
Control Lock	✓	✓	✓	✓	✓	✓	✓	✓	✓	✓	✓	✓	✓	✓
Press & Hold Light	✓	✓	✓	✓	✓	✓	✓	✓	✓	✓	✓	✓	✓	✓
Press & Hold Chime	✓	✓	✓	✓	✓	✓	✓	✓	✓	✓	✓	✓	✓	✓
Press & Hold Max Fill	✓	✓	✓	✓	✓	✓	✓	✓		✓	✓	✓	✓	✓

✓Available selections
▭ Shaded areas represent factory presets.

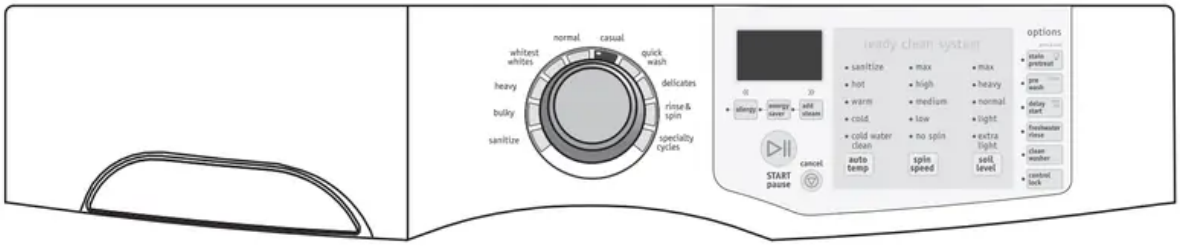

These Temperature, Spin Speeds, Soil Levels and Options are available with the following cycles:

	Sanitize	Bulky	Heavy	Whitest Whites	Normal	Casual	Quick Wash	Delicates	Rinse & Spin	Specialty Cycles					
										Quick Sanitize	Jeans	Pet Beds	Kids Wear	Stuffed Toys	Active Wear
Auto Temp															
Sanitize	✓									✓					
Hot		✓	✓	✓	✓							✓	✓		
Warm		✓	✓	✓	✓	✓	✓	✓						✓	
Cold		✓	✓		✓	✓	✓	✓			✓				✓
Cold Water Clean		✓	✓		✓	✓	✓	✓	✓						
Spin Speed															
Max	✓	✓	✓	✓	✓		✓		✓	✓					✓
High	✓	✓	✓	✓	✓	✓	✓		✓			✓	✓		
Medium	✓	✓	✓	✓	✓	✓		✓	✓		✓				
Low	✓			✓	✓	✓		✓	✓					✓	
No Spin					✓	✓		✓	✓						
Soil Level															
Max	✓	✓	✓	✓	✓										
Heavy	✓	✓	✓	✓	✓	✓						✓			
Normal	✓	✓	✓	✓	✓	✓		✓			✓		✓	✓	✓
Light		✓		✓	✓	✓	✓	✓							
Extra Light				✓	✓	✓	✓	✓		✓					
Options															
Allergy	✓		✓									✓	✓		
Energy Saver		✓	✓	✓	✓	✓									
Add Steam	✓	✓	✓	✓	✓	✓						✓		✓	
Stain Pretreat		✓	✓	✓	✓	✓		✓							
Pre Wash		✓	✓	✓	✓										
Delay Start	✓	✓	✓	✓	✓	✓	✓	✓	✓	✓	✓	✓	✓	✓	✓
Freshwater Rinse	✓	✓	✓	✓	✓	✓	✓	✓	✓		✓	✓	✓	✓	
Clean Washer									✓						
Control Lock	✓	✓	✓	✓	✓	✓	✓	✓	✓	✓	✓	✓	✓	✓	✓
Press & Hold Light	✓	✓	✓	✓	✓	✓	✓	✓	✓	✓	✓	✓	✓	✓	✓
Press & Hold Chime	✓	✓	✓	✓	✓	✓	✓	✓	✓	✓	✓	✓	✓	✓	✓
Press & Hold Max Fill	✓	✓	✓	✓	✓	✓	✓	✓		✓	✓	✓	✓	✓	✓

✓Available selections
Shaded areas represent factory presets.

STAIN REMOVAL GUIDE

Safe Stain Removal Procedures

To reduce the risk of fi re or serious injury to persons or property, comply with the basic warnings listed below:

- Read and comply with all instructions on stain removal products.
- Keep stain removal products in their original labeled containers and out of children's reach.
- Thoroughly wash any utensils used.
- Do not combine stain removal products, especially ammonia and chlorine bleach. Dangerous fumes can result.

- Never wash items which have been previously cleaned in, washed in, soaked in or spotted with gasoline, dry cleaning solvents or other fl ammable or explosive substances because they give off vapors that could ignite or explode.
- Never use highly fl ammable solvents, such as gasoline, inside the home. Vapors can explode on contact with fl ames or sparks.

For Successful Stain Removal:

- Remove stains promptly.
- Determine the kind of stain, then follow the recom mended treatment in the stain removal chart on the next page.
- To pretreat stains, use a prewash product, liquid detergent, or a paste made from powder detergent and water.
- Use cold water on unknown stains because hot water can set stains.
- Consult care label instructions for treatments to avoid on specifi c fabrics.
- Check for colorfastness by testing stain remover products on an inside seam.
- Rinse and wash items after stain removal.

WARNING

HARMFUL VAPOR HAZARD

Do not use or mix liquid chlorine bleach with other household chemicals such as toilet cleaners, rust removers, acid or products containing ammonia. These mixtures can produce dangerous fumes which can cause serious injury or death.

For best results
Follow the fabric care label instructions on items to be washed.

Stain Removal Suggestions

STAIN	TREATMENT
Adhesive tape, chewing gum, rubber cement	Apply ice. Scrape off excess. Place stain face down on paper towels. Saturate with prewash stain remover or nonflammable dry cleaning fluid.
Baby formula, dairy products, egg	Use product containing enzymes to pretreat or soak stains. Soak for 30 minutes or more. Wash.
Beverages (coffee, tea, soda, juice, alcoholic beverages)	Pretreat stain. Wash using cold water and bleach safe for fabric.
Blood	Rinse with cold water. Rub with bar soap. Or, pretreat or soak with product containing enzymes. Wash using bleach safe for fabric.
Candle wax, crayon	Scrape off surface wax. Place stain face down between paper towels. Press with warm iron until wax is absorbed. Replace paper towels frequently. Treat remaining stain with prewash stain remover or nonflammable dry cleaning fluid. Hand wash to remove solvent. Wash using bleach safe for fabric.
Chocolate	Pretreat or soak in warm water using product containing enzymes. Wash using bleach safe for fabric.
Collar or cuff soil, cosmetics	Pretreat with prewash stain remover or rub with bar soap.
Dye transfer on white fabric	Use packaged color remover. Wash using bleach safe for fabric.
Grass	Pretreat or soak in warm water using product containing enzymes. Wash using bleach safe for fabric.
Grease, oil, tar (butter, fats, salad dressing, cooking oils, car grease, motor oils)	Scrape residue from fabric. Pretreat. Wash using hottest water safe for fabric. For heavy stains and tar, apply nonflammable dry cleaning fluid to back of stain. Replace towels under stain frequently. Rinse thoroughly. Wash using hottest water safe for fabric.
Ink	Some inks may be impossible to remove. Washing may set some inks. Use prewash stain remover, denatured alcohol or nonflammable dry cleaning fluid.
Mildew, scorch	Wash with chlorine bleach if safe for fabric. Or, soak in oxygen bleach and hot water before washing. Badly mildewed fabrics may be permanently damaged.
Mud	Brush off dry mud. Pretreat or soak with product containing enzymes.
Mustard, tomato	Pretreat with prewash stain remover. Wash using bleach safe for fabric.
Nail polish	May be impossible to remove. Place stain face down on paper towels. Apply nail polish remover to back of stain. Repeat, replacing paper towels frequently. Do not use on acetate fabrics.
Paint, varnish	WATER BASED: Rinse fabric in cool water while stain is wet. Wash. Once paint is dry, it cannot be removed. OIL BASED AND VARNISH: Use solvent recommended on can label. Rinse thoroughly before washing.
Perspiration	Use prewash stain remover or rub with bar soap. Rinse. Wash using nonchlorine bleach in hottest water safe for fabric.
Rust, brown or yellow discoloration	Use rust remover safe for fabric. Do not use chlorine bleach because it may intensify discoloration.
Shoe polish	LIQUID: Pretreat with a paste of powder detergent and water. PASTE: Scrape residue from fabric. Pretreat with prewash stain remover or nonflammable dry cleaning fluid. Rinse. Rub detergent into dampened area. Wash using bleach safe for fabric.
Tomato	Pretreat with prewash stain remover. Wash using bleach safe for fabric.
Urine, vomit, mucus, feces	Pretreat or soak in product containing enzymes. Wash using bleach safe for fabric.
Wine	Pretreat or soak in cold water. Wash in hottest water and bleach safe for fabric

CARE AND CLEANING

Inside Routine Cleaning (Preventative)

To help prevent odors, mold or mildew, leave the door open for a few hours after use or whenever the washer is not in use.

CAUTION

ENTRAPMENT and TIP-OVER HAZARD

Do not leave the door open if there are small children or pets present. An open door could entice children to hang on the door or crawl inside the washer. If there are no small children present, you may leave the door ajar to prevent odor build up.

TO REFRESH OR CLEAN INSIDE OF WASHER

To clean and freshen the washer, perform the Clean Washer cycle. For best results use the Clean Washer cycle once a month. To begin the cycle, press Select when prompted during automated reminder mode or manually select the cycle by following these directions:

Rotate cycle knob to Rinse & Spin (or Spin Only, if your models does not have Rinse & Spin cycle). Then press the Clean Washer option button. The LCD screen will display “SYSTEM CLEAN”.

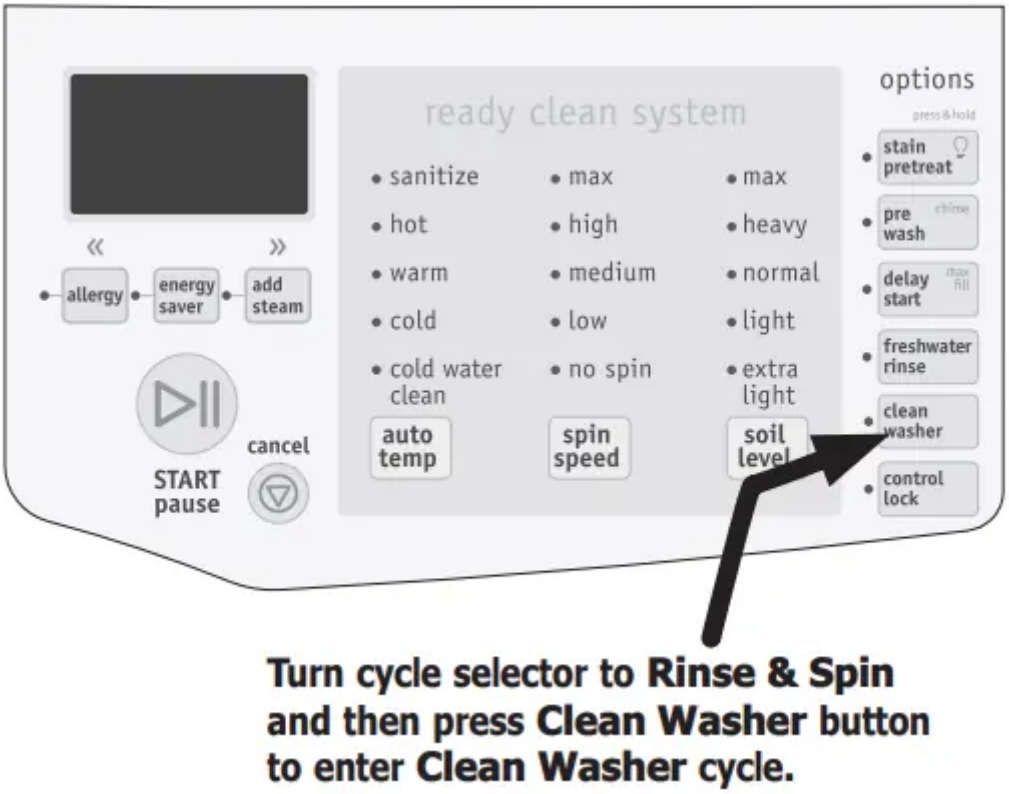

IMPORTANT Items left in washer while performing the Clean Washer cycle will cause a severe out-of-balance situation that could damage the washing machine.

If installed, remove the “MAIN WASH - LIQUID ONLY” cup from the dispenser. REMOVE ALL ITEMS FROM WASH DRUM before fi lling the detergent chamber with one (1) cup of liquid chlorine bleach OR one (1) pouch of TIDE® WASHING MACHINE CLEANER. DO NOT use both. Press Start to begin.

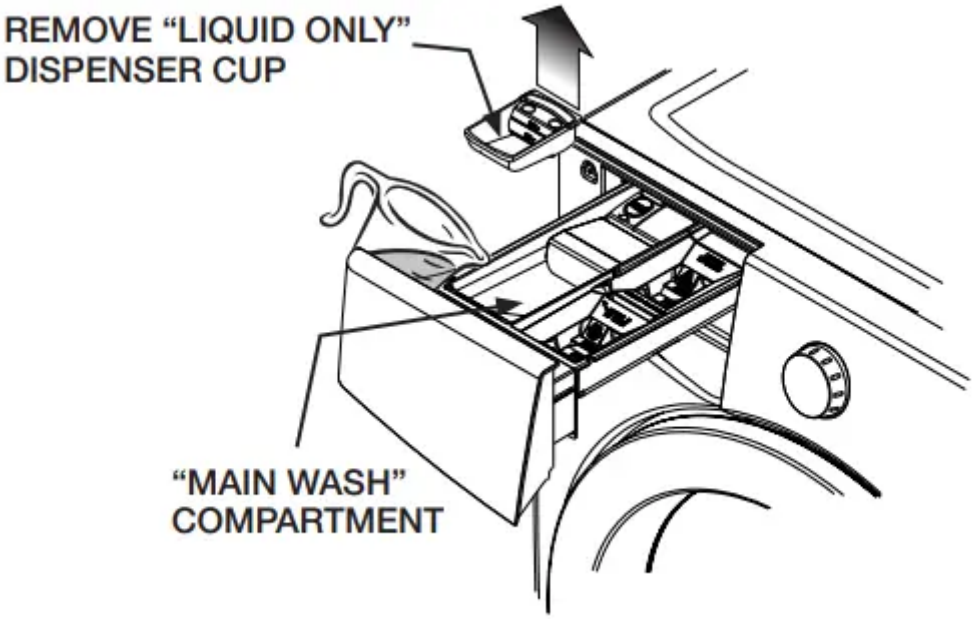

For best results

Immediately follow up with a Spin Only cycle. Select Extra Rinse on Max Spin Speed with no detergent or bleach to help clear any residual bleach left after the Clean Washer cycle.

NOTE If the Clean Washer Cycle is cancelled or paused during the cycle, the washer will go through 2 rinse cycles to clean the drum of any residual bleach before unlocking the door

WARNING

HARMFUL VAPOR HAZARD

Do not use or mix liquid chlorine bleach with other household chemicals such as toilet cleaners, rust removers, acid or products containing ammonia. These mixtures can produce dangerous fumes which can cause serious injury or death.

Other Inside Routine Cleaning (Preventative)

Cleaning Dispenser Drawer Area

NOTE Detergent and fabric softener may build up in the dispenser drawer. Residue should be removed once or twice a month.

- Remove the drawer by pulling the drawer out until it stops.
- Reach back into the left rear corner of the drawer cavity and press down fi rmly on the lock tab. Pull out the drawer.
- Remove the insert from the bleach and fabric softener compartments.
- Rinse the drawer and inserts with a combination of ¾ cup liquid chlorine bleach and 1 gallon hot tap water to remove traces of accumulated powders and liquids. Large amounts of fabric softener residue may indicate improper dilution or more frequent cleaning is required. Rinse well with tap water.
- To clean the drawer opening, use a small brush to clean the recess. Remove all residue from the upper and lower parts of the recess.
- Replace the insert by pressing it in place until you hear a slight click. Return the dispenser drawer

Daily Preventative Maintenance

- Remove items from the washer as soon as the cycle ends. Excess wrinkling, color transfer, and odors may develop in items left in the washer.
- If there are no small children or pets present, you may leave the door ajar when the washer is not in use.
- Leave the dispenser drawer open slightly at the end of the wash day.
- Dry around the washer door opening, fl exible gasket, and door glass. These areas should always be clean to ensure a water tight seal.
- When extremely soiled items have been washed, a dirty residue may remain on the drum. Remove this by wiping the drum with a nonabrasive household cleanser. Rinse thoroughly with water.

- Periodically, wipe dry the folds in the bottom of the fl exible gasket to remove lint and other debris.

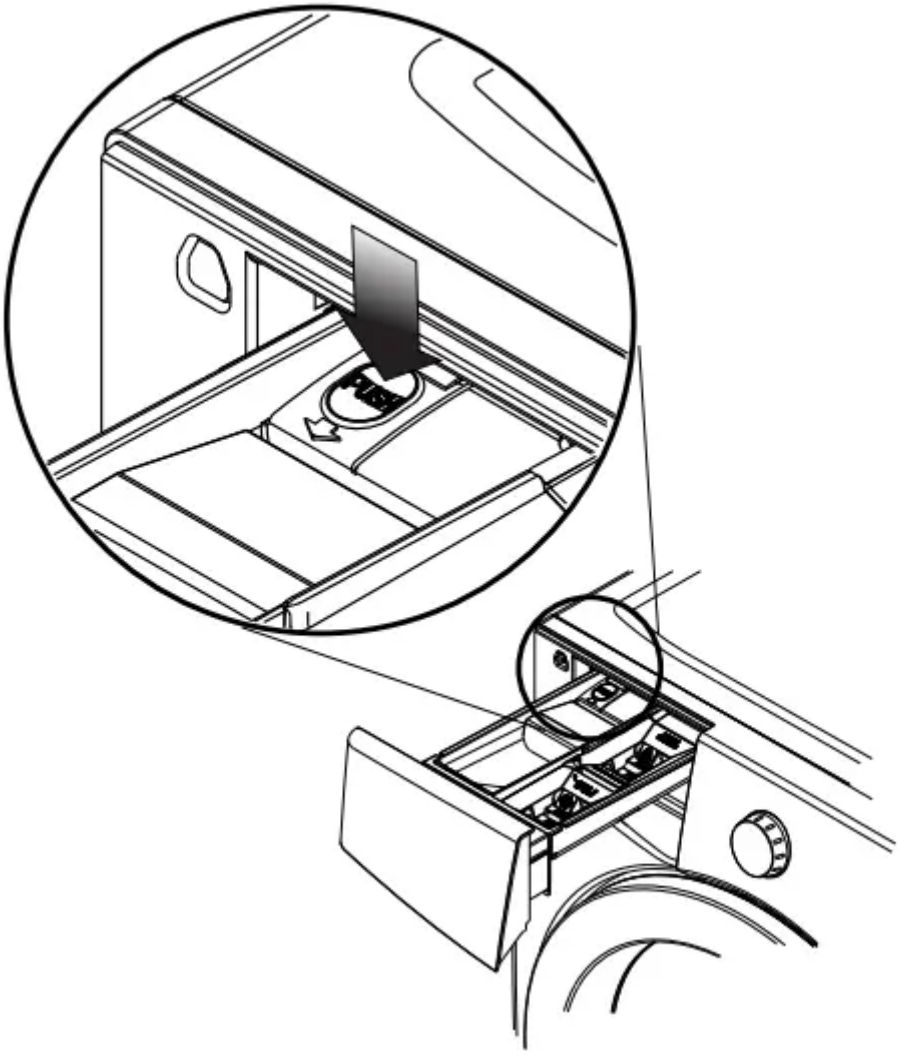

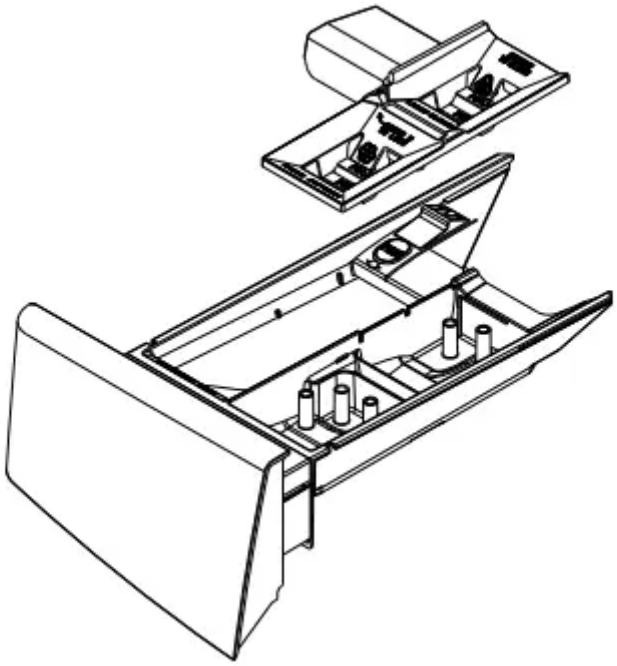

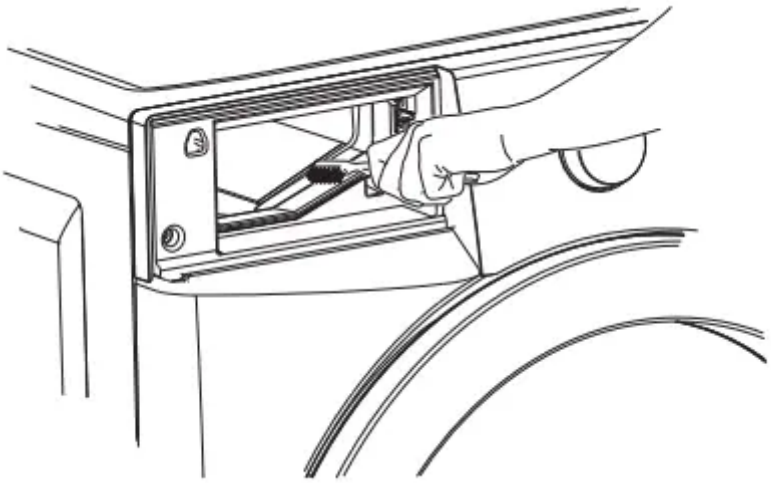

Inside Cleaning (Aggressive)

In cases where the Clean Washer cycle along with care and cleaning of rubber gasket folds isn't done, and severe odor, mold, mildew, or residue buildup have developed, follow the below cleaning procedure to help alleviate the problem.

CLEANING PROCEDURE - Washer Drum

Ensure the wash tub is empty (or no clothes load). Open the detergent drawer and pour eight (8) cups of bleach into the "MAIN WASH" detergent compartment. Select Clean Washer cycle as described previously in Inside Routine Cleaning (Preventative).

Upon cycle completion inspect the interior of the washer to see if the odor/residue has been eliminated. If any additional cleaning is required, repeat the above procedure. This may take

several cycles depending on the severity of the odor/residue. You may observe some remaining discoloration due to the long term effects of this residue.

For especially contaminated areas visible inside the drum (including the front rubber seal), these areas might be more effectively cleaned by spraying a Bleach Cleaner on a scrub brush, soft sponge, or towel and scrubbing.

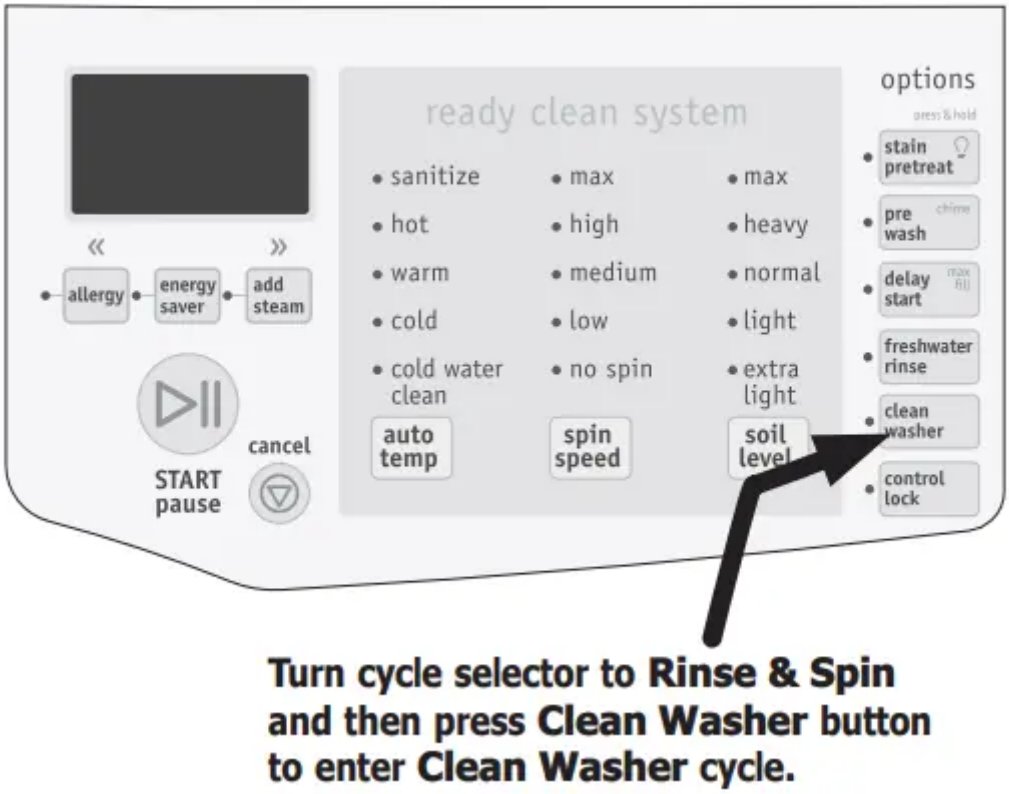

IMPORTANT Always wear rubber or latex gloves and protect fl oor and clothing from damage. If odor is still left after bleach cycle(s) and bleach cleaner, open the detergent drawer and pour one (1) pouch of TIDE® WASHING MACHINE CLEANER in detergent drawer. Select Clean Washer Cycle as above and start the washer.

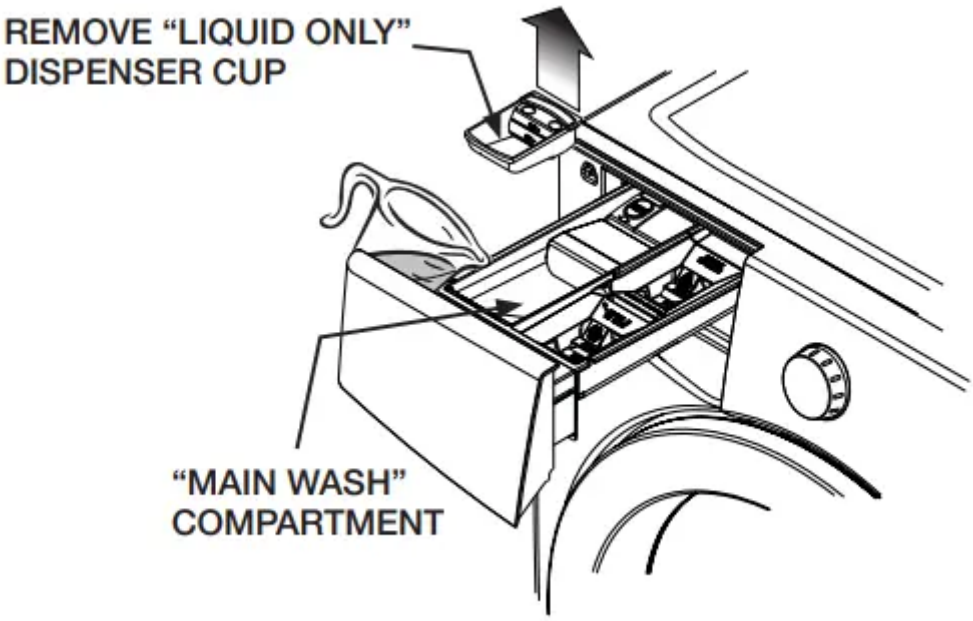

For best results

Immediately follow up with a Spin Only cycle. Select Extra Rinse on Max Spin Speed with no detergent or bleach to help clear any residual bleach left after the Clean Washer cycle.

IMPORTANT See Inside Routine Cleaning (Preventative) for future cleaning maintenance which is necessary to avoid repeating issues

NOTE If the Clean Washer cycle is cancelled or paused during the cycle, the washer will go through 2 rinse cycles to clean the drum of any residual bleach before unlocking the door

WARNING

HARMFUL VAPOR HAZARD

Do not use or mix liquid chlorine bleach with other household chemicals such as toilet cleaners, rust removers, acid or products containing ammonia. These mixtures can produce dangerous fumes which can cause serious injury or death

Outside Routine Cleaning

- When washing is completed, wipe top and sides of washer with a damp cloth. Turn water faucets off to prevent pres sure build-up in the hoses.
- Clean the cabinet with mild soap and water. Never use harsh, gritty or abrasive cleansers
- If the cabinet becomes stained, clean with diluted chlo rine bleach (1 part bleach to 8 parts water). Rinse several times with clear water.
- Remove glue residue from tape or labels with a mixture of warm water and mild detergent. Or, touch residue with the sticky side of tape.
- When cleaning chrome parts use a window cleaner with ammonia or mild soap and water.
- Before moving the washer, place a strip of cardboard or thin fi berboard under the front leveling legs to prevent damage to the floor

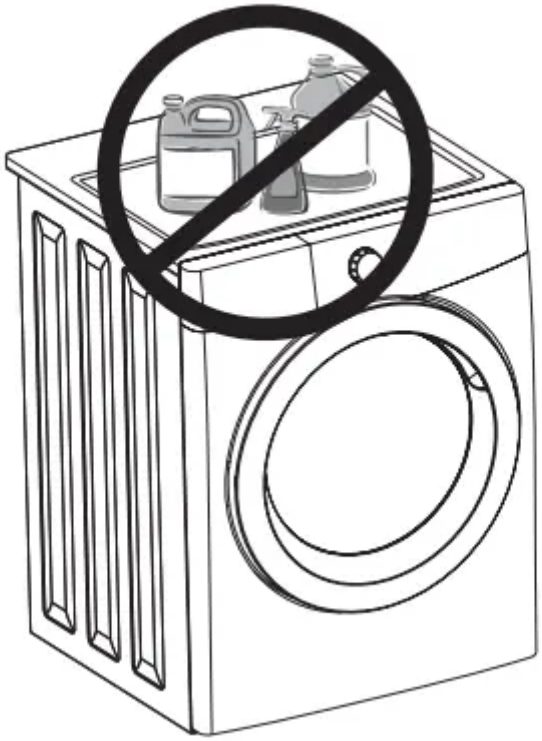

IMPORTANT Do not store or place laundry products on top of washer at any time. They can damage the fi nish or controls.

Winterizing Instructions

IMPORTANT If the washer is stored in an area where freezing can occur or moved in freezing temperatures, follow these winterizing instructions to prevent damage to the washer:

1. Turn off water supply faucets.
2. Disconnect hoses from water supply and drain water from hoses.
3. Plug electrical cord into a properly grounded electrical outlet.
4. Add 1 gallon (3.8 L) nontoxic recreational vehicle (RV) antifreeze to empty wash drum. Close door.
5. Select the Spin Only cycle. Press Start and let the washer drain for 1 minute to drain out all the water. Not all of the RV antifreeze will be expelled.
6. Press Cancel, unplug electrical power cord, dry off drum interior and close door.
7. Remove dispenser drawer. Drain any water in compartments and dry compartments. Replace drawer.
8. Store washer in an upright position.
9. To remove antifreeze from washer after storage, perform Clean System Cycle as described earlier.

SOLUTIONS TO COMMON PROBLEMS

Common Washing Problems

Many washing problems involve poor soil and stain removal, residues of lint and scum, and fabric damage. For satisfactory washing results, follow these suggestions provided by The Soap and Detergent Association.

PROBLEM	POSSIBLE CAUSES	SOLUTIONS	PREVENTIVE MEASURES
Blue stains	• Undiluted liquid detergent or fabric softener dispensed directly onto fabric.	• If caused by detergent, mix 1 cup (240 ml) white vinegar with 1 quart (.95 L) water in a plastic container. Soak item 1 hour. Rinse. • If caused by fabric softener, rub stains with bar soap. Wash.	• Avoid overfilling detergent and fabric softener compartments of dispenser.
Discoloration, graying	• Not enough detergent. • Wash water temperature too low. • Incorrect sorting.	• Rewash with correct amount of detergent and hottest water safe for fabric. • Add bleach safe for fabric.	• Sort items by soil level and color. • Use correct amount of detergent, hottest water and bleach safe for fabric.
Greasy, oily stains	• Not enough detergent. • Undiluted liquid fabric softener poured directly on fabric.	• Treat with prewash stain remover or liquid detergent. • Increase detergent and water temperature. Rewash. • Rub fabric softener stains with bar soap.	• Use correct amount of detergent and hottest water safe for fabric. • Do not pour liquid fabric softener directly on fabric. See Operating Your, step 5.
Holes, tears, or snags	• Incorrect use of chlorine bleach. • Unfastened zippers, hooks, buckles. • Rips, tears and broken threads. • Overloading the washer. • Degradation of fabric.	• May be irreversible if rips, tears and seams cannot be mended.	• Never pour chlorine bleach directly on fabric. • Check condition of items before washing. See Operating Your, steps 2 and 5.
Lint	• Incorrect sorting. • Tissues left in pocket. • Overloading the washer. • Not enough detergent. • Undissolved detergent has left a residue resembling lint. • Static cling is attracting lint. • Load washed too long.	• Reduce load size. Rewash using correct water temperature, water level, and amount of detergent. • Add nonprecipitating water conditioner to wash water to remove detergent residue. • Add liquid fabric softener to final rinse. • Dry load in dryer. • Remove lint with lint brush or roller.	• See Operating Your, steps 1 and 2. • Do not overload washer. • Use correct temperature and amount of detergent, water and wash time.

PROBLEM	POSSIBLE CAUSES	SOLUTIONS	PREVENTIVE MEASURES
Pilling (Fibers ball up and cling to fabric.)	• Pilling is normal with synthetic and permanent press fabrics. This is due to abrasion from normal wear.	• Use a lint brush or shaver to remove pills.	• Use fabric softener in the washer to lubricate fibers. • When ironing, use spray starch or fabric finish on collars and cuffs. • Turn items inside out to reduce abrasion.
Residue or powder on dark items; Stiff, harsh fabrics.	• Undissolved detergent. • Some granular detergents can combine with hard water minerals to form a residue. • Overloading the washer.	• Rewash load.	• Increase water temperature using hottest water safe for fabric. • Do not overload washer. • Use liquid detergent or use nonprecipitating water conditioner with powder detergent.
Wrinkling	• Overloading the washer. • Incorrect wash cycle for wash load.	• Reduce load size. • Rinse in cold water with liquid fabric softener using the casual or delicate cycle.	• Do not overload washer. • Remove items from washer as soon as cycle is completed. • Use liquid fabric softener.
Yellow buildup of body soil on synthetic fabrics	• Agitation time too short. • Wash water temperature too low. • Not enough detergent.	• Soak in detergent booster or product containing enzymes. • Wash in hottest water safe for fabric using casual cycle. • Increase detergent. • Add bleach safe for fabric or treat with color remover.	• Select correct wash cycle. • Use correct amount of detergent. • Wash synthetics frequently using hot or warm water.
Yellow or brown rust stains	• Iron or manganese in water supply, water pipes, or water heater.	• To restore discolored load of whites, use rust remover safe for fabric. • Do not use chlorine bleach to remove rust stains. It may intensify discoloration.	• Use nonprecipitating water softener. • Before washing, run hot water for a few minutes to clear lines. • Drain water heater occasionally. • For an ongoing problem, install an iron filter in your water supply system.

PROBLEM	POSSIBLE CAUSES	SOLUTIONS	PREVENTIVE MEASURES
Residue stains / buildup, mold or mildew stains in gasket	• Moisture in the washer. • Use of non-HE detergent. • Overdosing detergent. • Overloading wash drum. • Leaving a wet load set in washer. • Cold water washes which may not completely dissolve and remove detergents.	• Perform SYSTEM CLEAN cycle • Scrub gasket with Comet™ Spray Gel Mildew Stain Remover using brush to remove stains. • Use only HE (high efficiency detergent) along with recommended dosage. • Remove wash load immediately upon cycle completion.	• Run dehumidifier in laundry room. • Avoid overfilling detergent and fabric softener compartments of dispenser. • Dry the inside of washer and gasket after every run.
Residue stains / buildup, mold or mildew stains in dispenser drawer	• Moisture in the washer. • Use of non-HE detergent. • Overdosing detergent.	• Remove dispenser drawer and wipe dispenser and inserts with combination of ¾ cup liquid chlorine bleach and one gallon hot water. Rinse well, and repeat if necessary. Return drawer to location. NOTE: Wear rubber of latex gloves. Protect floor and clothing from bleach damage. • Use only HE (high efficiency detergent) along with recommended dosage.	• Avoid overfilling detergent and fabric softener compartments of dispenser.
Water in fold of flexible gasket	• Result of washing and part of normal operation.	• At the end of each wash, dry inside of gasket fold with clean dry towel all around gasket.	
Odor	• Moisture in the washer. • Use of non-HE detergent. • Overdosing detergent. • Leaving a wet load remain in washer. • Cold water washes which may not completely dissolve and remove detergents.	• Perform SYSTEM CLEAN cycle. • At the end of each wash, dry inside of gasket fold with clean, dry towel all around gasket. • Use only HE (high efficiency detergent) along with recommended dosage. • Remove wash load immediately upon cycle completion. • Pour one cup liquid chlorine bleach in standpipe; let remain a day and flush with water.	• Leave door and dispenser drawer open for a few hours after use or whenever washer is not in use.

Service Prevention Checklist

Before calling for service, review this list. It may save both time and expense. The list includes common occurrences that are not the result of defective workmanship or materials in this washer.

OCCURRENCE	POSSIBLE CAUSE	SOLUTION
NOISE		
High pitch "jet engine" noise.	A certain amount of motor whine is normal during the spin cycle.	
Rattling and clanking noise.	Foreign objects such as coins or safety pins may be in drum or pump.	Stop washer and check drum. If noise continues after washer is restarted, objects may be in pump. Call your authorized servicer.
	Belt buckles and metal fasteners are hitting wash drum.	To prevent unnecessary noise and damage to drum, fasten fasteners and turn items inside out.
Thumping sound.	Heavy wash loads may produce a thumping sound. This is usually normal. If sound continues, washer is probably out of balance.	Stop washer and redistribute wash load.
Vibrating noise.	Washer is not resting firmly on floor.	Move washer so it rests firmly on floor. Adjust leveling legs. See INSTALLATION INSTRUCTIONS for details.
	Shipping bolts and foam block have not been removed during installation.	See INSTALLATION INSTRUCTIONS for removing shipping bolts and foam block.
	Wash load unevenly distributed in drum.	Stop washer and rearrange wash load.
OPERATING		
Washer does not start.	Electrical power cord may not be plugged in or connection may be loose.	Make sure plug fits tightly in wall outlet.
	House fuse blown, circuit breaker tripped, or a power outage has occurred.	Reset circuit breaker or replace fuse. Do not increase fuse capacity. If problem is a circuit overload, have it corrected by a qualified electrician. If problem is a power outage, call local electric company.
	Water supply faucets are not turned on.	Turn on water supply faucets.
	Motor is overheated. Washer motor will stop if it becomes overheated.	It will automatically restart after a cool down period of up to 30 minutes (if washer has not been manually turned off).
	Washer door is not completely closed.	Close door completely.
Washer won't spin.	Load is too small.	Add 1 or 2 similar items to help balance the load.
Residue left in drum.	Heavily soiled items.	Wipe drum with a nonabrasive household cleanser, then rinse. Shake or brush excess dirt and sand from items before washing

OCCURRENCE	POSSIBLE CAUSE	SOLUTION
WATER		
Water collects in folds of the bellows at the end of the cycle.	This is a result of the washing action and is part of the normal operation of the washer.	
Water collects in bleach and fabric softener compartments.	This is a result of the siphoning action and is part of the normal operation of the washer.	Water may be removed by removing the dispenser drawer (see Care and Cleaning in this guide) and draining water into the empty drum or sink.
Wash load too wet after spin.	Washer is overloaded.	Do not overload washer. See Operating Your Washer, step 4.
	Load is too small.	Add 1 or 2 similar items to help balance the load.
	Load is out of balance.	Rearrange load to allow proper spinning.
	Drain hose is kinked.	Straighten drain hose.
Water does not enter washer or it enters slowly.	Water supply is not adequate in area.	Check another faucet in the house. Wait until water supply and pressure increase.
	Water supply faucets are not completely open.	Fully open hot and cold faucets.
	Water is being used elsewhere in the house. Water pressure must be at least 30 psi (260 kPa).	Avoid running water elsewhere while washer is filling.
	Water inlet hoses are kinked.	Straighten hoses.
Warm or hot water is not hot enough.	Hot water heater is set too low or is a distance from washer.	Measure hot water temperature at nearby faucet with candy or meat thermometer. Water temperature should be at least 120°F (49°C). Adjust water heater as necessary.
	Hot water is being used elsewhere in the house.	Avoid using hot water elsewhere before or during washer use. There may not be enough hot water available for proper cleaning. If problem persists, your hot water system may be unable to support more than 1 use at a time.
Water in washer does not drain or drains slowly.	Drain hose is kinked or clogged.	Clean and straighten the drain hose.
	Drain hose standpipe is too tall. Maximum standpipe height is 8' (2.4 m).	Reduce standpipe height to less than 8' (2.4 m). See INSTALLATION INSTRUCTIONS.
	House drain pipes are clogged.	Unclog drain pipes. Contact plumber if necessary.
Water leaks.	Fill hose connection is loose at faucet or washer.	Check and tighten hose connections. Install rubber sealing washers provided.
Oversudsing.	Wrong detergent.	Run rinse cycle. Use a low-sudsing, high efficiency detergent.
	Too much detergent.	Run rinse cycle. Use less detergent in future loads.
Incorrect wash and rinse temperatures.	Hot and cold water hoses are connected to wrong supply faucets.	Connect hot water hose to hot water faucet and cold water hose to cold water faucet.
Water is entering washer but tub does not fill.	Drain hose standpipe is too low. Standpipe must be a minimum of 23.6" (60 cm) high to prevent siphoning.	Increase standpipe height to at least 23.6" (60 cm). See INSTALLATION INSTRUCTIONS.

Warning

This content is compiled from multiple sources and is provided for reference purposes only. It may not be complete or fully applicable to all situations. If you are unable to resolve your issue, please contact the product manufacturer or an authorized service provider for official support.

Document generated by ManualsFile