User manual Ceramic Cooktop

PRODUCT DESCRIPTION

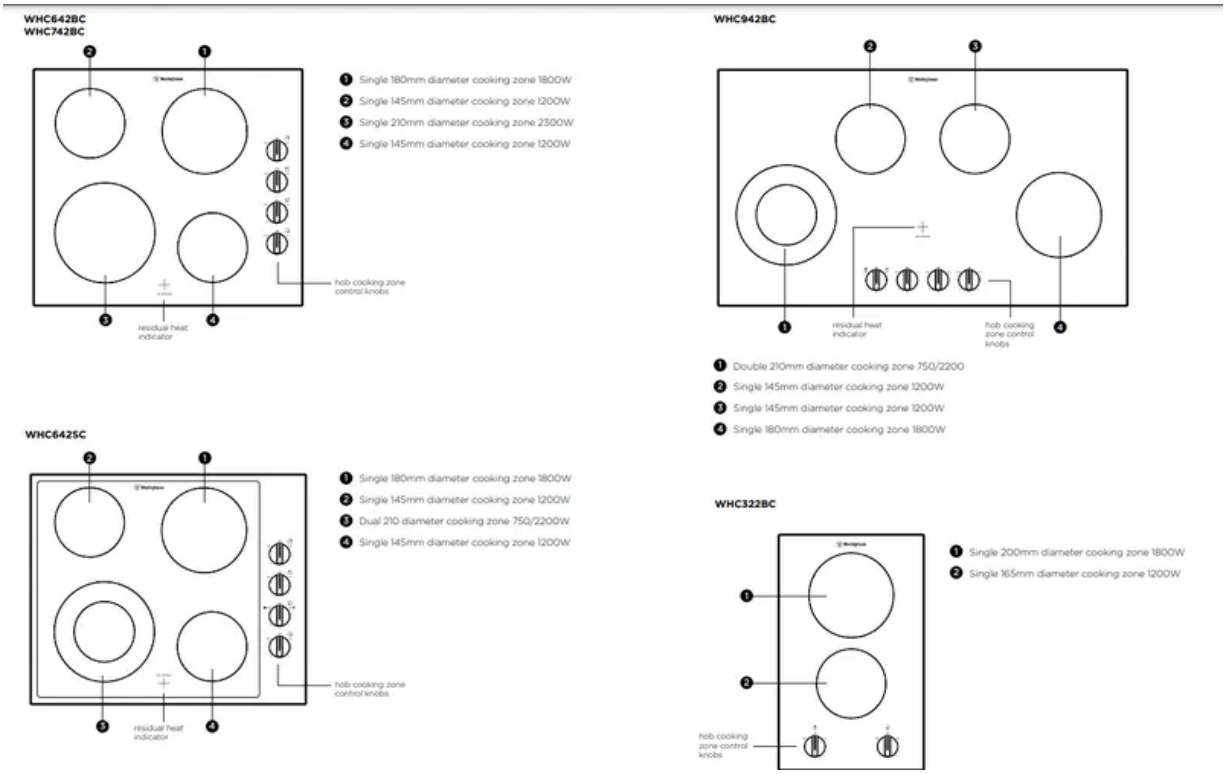

OPERATING YOUR APPLIANCE

IMPORTANT: When a cooking zone is switched on it may hum briefly. This is a characteristic of all ceramic glass cooking zones and does not impair either the function of the life of the appliance.

Controlling the temperature - single zone

- To increase the heat, turn the control knob clockwise.

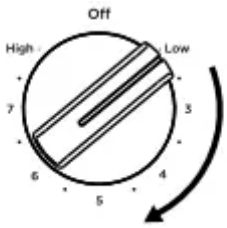

- To decrease the heat, turn the control knob anti-clockwise.

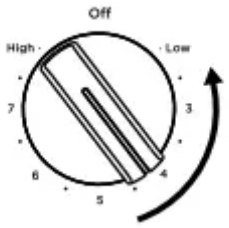

- To switch off, turn the control knob to the off position.

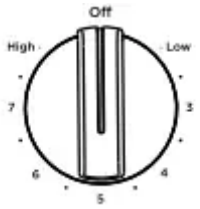

- When boiling water or searing food select a high setting. As soon as steam forms or the fat or oil is hot, set a lower heat setting. To end the cooking process, turn the knob to the ‘Off’ position.

IMPORTANT: The Ring Control Knobs for single cooking zones can be turned either right or left.

Controlling the temperature - dual zone

By switching the outside ring on and off, the effective heating surface can be matched to the size of the cookware.

IMPORTANT: The inside ring must be switched on before switching on the outside ring.

- To turn the outside ring on, turn the control knob clockwise past a slight resistance, as far as it will go. The inside ring must be switched on before turning on the outside ring.

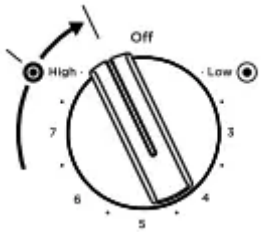

- Turn the control knob anti-clockwise to reach the desired setting.

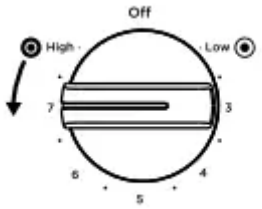

- To switch off, turn the control knob to the off position.

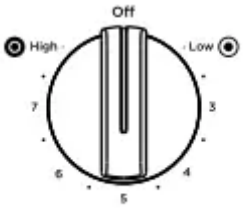

Cookware

- For optimal results use good quality cookware with a heavy flat base. Cookware made of enamelled or with aluminium or copper bottoms can leave discolourations on the glass ceramic surface which are difficult or impossible to remove.

ENVIRONMENT ENVIRONMENTAL TIPS

- Always place the cookware on the cooking zone before it is switched on.
- If possible, always place the lids on the pans.
- Switch the cooking zones off before the end of the cooking time to take advantage of the residual heat.
- Ensure the bottom of the pan is the same size as the cooking zone you are using

Allowing heat to escape during cooking increases cooking time and energy consumption

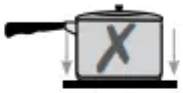

Using the wrong size pot for the cooking zone allows heat to escape

CARE AND CLEANING

General cleaning

- WARNING Ensure that the appliance is turned off and all residual heat has dissipated before attempting to clean the cooktop.
- CAUTION: Sharp objects and abrasive cleaning materials will damage the appliance. To prevent scratches to the surface only non-scratch scourers should be used. Damage caused by abrasive cleaning materials is not covered by the Warranty.
- CAUTION: Residue from cleaning agents may damage or stain the appliance. Damage caused by residual cleaning agents is not covered by the Warranty. Wipe the appliance with a mild detergent and a soft, damp cloth. Remove all residue after cleaning and dry with a soft cloth.

Removing deposits

1. Place a scraper* on the glass ceramic surface at an angle.
2. Remove residue by sliding the blade over the surface.
3. Wipe the appliance clean with a mild detergent and a damp cloth.
4. Dry the appliance using a clean, dry cloth.

* Provided with selected models or available for purchase as an accessory

TIPS & INFORMATION

- Sugar, food containing sugar, plastics and tin foil should be removed immediately with a scraper.
- Limescale, water rings, fat splashes and metallic discolouration should be removed with a glass ceramic or stainless steel cleaner when the appliance has cooled down.
- Scratches or dark stains on the glass ceramic that cannot be removed do not affect the functioning of the appliance.

TROUBLESHOOTING

1. The cooking zones are not functioning.

- The desired heat setting is not set.
    - Set the heat setting.
- The fuse in the house’s electrical wiring (fuse box) has been tripped.
    - Check the fuse. If the fuse continues to trip, please call an authorised electrician.

2. The residual heat indicator is not displaying anything.

- The cooking zone was only on for a short period of time and is therefore not hot.
    - If the cooking zone is hot, call the Customer Service Department.

3. Red rings, limescale or water rings, shiny metallic or other discolouration, scratches/shadows, bubbles or other miscellaneous stains on ceramic glass cooktop surfaces.

- Cooktop surface has not been cleaned correctly. Cleaning/maintenance of the cooktop surface is not covered under warranty. If a service call is placed to clean the cooktop you will be charged for the visit.
    - Use a ceramic glass cleaner such as Cerapol

4. Pitting of ceramic glass surface.

- Spillovers of liquid with high sugar content.
    - These types of spills must be removed immediately with a special scraper for the glass. If not, permanent damage to the cooktop glass can occur which is not covered under warranty.

5. The residual heat indicator is not displaying anything.

- The cooking zone was only on for a short time and is therefore not hot.
    - If the cooking zone is supposed to be hot, call the Customer Service Department

6. Outer ring on double ring element won’t turn on.

- Control knob has not been turned far enough.
    - Turn control knob clockwise, past a slight resistance. Refer instructions

If you are unable to remedy the problem by following the above suggestions, please contact your dealer or the Customer Care Department.

WARNING: Repairs to the appliance are only to be carried out by qualified service engineers due to the risk of electric shock.

CAUTION: If the appliance has been wrongly operated or installed, service calls may not be covered under the Warranty

TECHNICAL DATA

MODEL	WHC642BC		WHC742BC		WHC642SC		WHC942BC		WHC322BC	
PNC	949 163 433		949 163 437		949 163 434		949 163 438		949 163 432	
Product dimensions (w x d mm)	590x520		700x520		606x505		900x520		320x520	
Cut out dimensions (w x d mm)	560x490		560x490		560x490		880x490		300x490	
Power (kW)	6.5		6.5		6.4		6.4		3.0	
Service cord	hardwired		hardwired		hardwired		hardwired		hardwired	
Elements	No. of zones	Watts	No. of zones	Watts	No. of zones	Watts	No. of zones	Watts	No. of zones	Watts
Front left	1	2300	1	2300	2	750/2200	2	750/2200	1	1200
Rear left	1	1200	1	1200	1	1200	1	1200	1	1800
Front right	1	1200	1	1200	1	1200	1	1800		
Rear right	1	1800	1	1800	1	1800	1	1200		
Total	4	6.5	4	6.5	4	6.4	4	6.4	2	3.0

INSTALLING YOUR APPLIANCE

WARNING: To avoid any potential hazard, you must follow our instructions when you install your appliance. Failure to install the appliance correctly could invalidate any warranty or liability claims and lead to prosecution.

- This appliance must be installed by an authorised person according to all codes and regulations as stated in the local municipal building code and other relevant statutory regulations.
- Wiring connections must be in accordance with AS/ NZS 3000 Wiring Rules and any particular conditions of the local authority.
- Wiring should be protected against mechanical failure. Refer to AS/NZS3000 clauses 3.3.2.6, 3.9, 3.10
- A means of disconnection with a contact separation of at least 3mm must be supplied in the fixed wiring.
- This appliance must be installed by an authorised person according to all codes and regulations as stated in the local municipal building code and other relevant statutory regulations.
- The minimum distances to other appliances and units are to be observed.
- Turn off the power at the mains before installing this appliance.
- Supply cords must have a temperature rating not less than 105°C.
- The surface temperature of the appliance exceeds 95°C. Underbench access must be restricted to prevent a hazard.

- The clamping joints must be installed by a qualified electrician.
- The electrical schematic must be observed.

Electrical connection

- Before connecting, check that the nominal voltage of the appliance stated on the rating plate, corresponds to the available supply voltage. The rating plate is located on the lower casing of the hob.
- The hob is to be connected to the mains using a device that allows the appliance to be disconnected from the mains at all poles with a contact opening width of at least 3mm. eg. automatic line protecting cut-out, earth leakage trips or fuse. A cable with a minimum temperature rating of V90HT or higher must be used as the mains connecting cable.
- The connection must be carried out as shown in the diagram. The connecting links should be fitted according to the appropriate connection diagram. The earth lead is connected to terminal

Connection cable

- Use the correct mains cable of type H05BB-F Tmax 90°C (or higher) for a single phase or two phase connection.
- Replace the damaged mains cable with a special cable (type H05BB-F TMAX 90°C or higher) WHC323BC: 3 x 1.5mm² with and all-pole 16A breaker. The others: 3 x 2.5mm2 with an all-pole 25A breaker. Speak to your local Service Centre.
- The earth cord (green/yellow cable) must be 2cm longer than phase and neutral cable (blue and brown cables).
- The cable conditions must be in accordance with regulations and the terminal screws tightened securely.
- The connecting cable is to be secured with the mains cable cleat and the covering closed by pressing firmly (lock into place).
- Before switching on for the first time, any protective foil or stickers must be removed from the glass ceramic surface.

IMPORTANT: Once connected to the mains supply, check that all the cooking zones are ready for use by briefly switching each on in turn at the maximum setting.

Applying the seal

- Clean the worktop around the cut-out area.

- Stick the single-sided adhesive sealing tape provided around the outside edge of the underside of the hob, ensuring that it is not stretched. The 2 ends of the tape should join in the middle of one side. Allow the tape to overlap by 2-3mm, trim, and press the 2 ends together

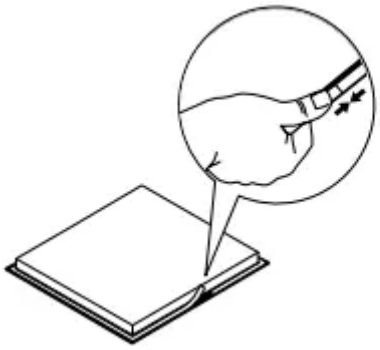

Assemble spring clips as shown, to support unit in benchtop.

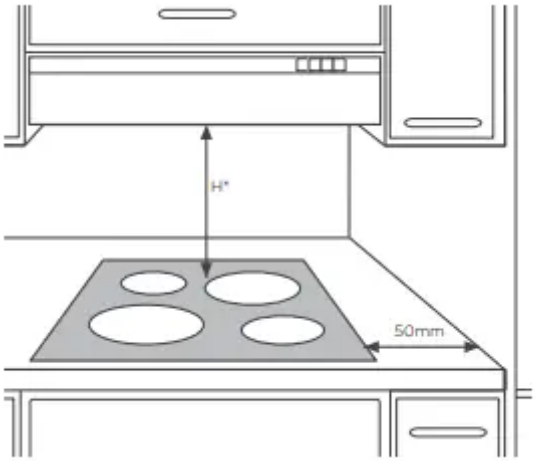

The cooktop must be installed at least 50mm from any combustible surface.

H* - refer to rangehood manufacturers installation instructions for minimum height from cooktop.

NOTE: The clearance must meet or exceed the minimum recommended for both the rangehood and cooktop. Refer to the rangehood installation manual.

WHC642BC

WHC642SC

WHC742BC

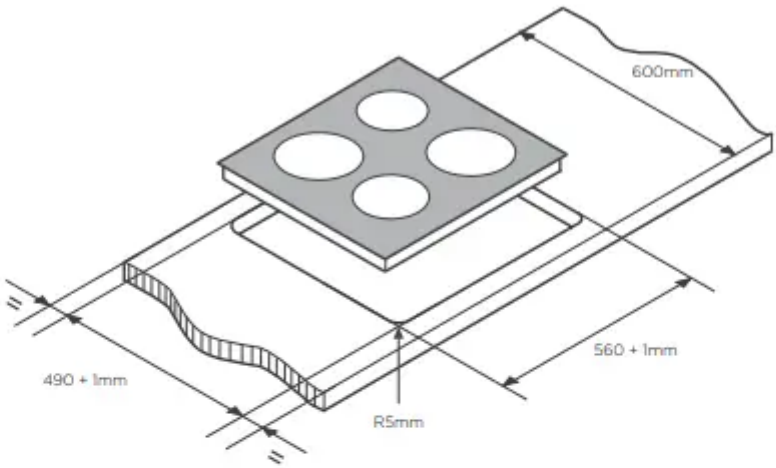

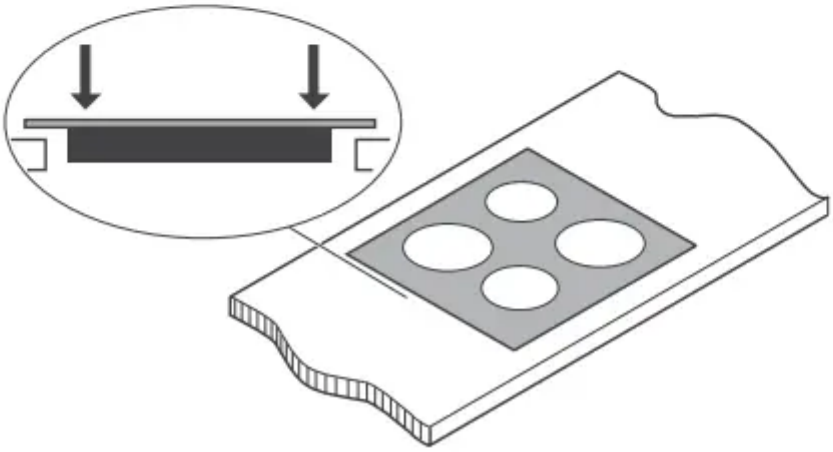

WHC942BC

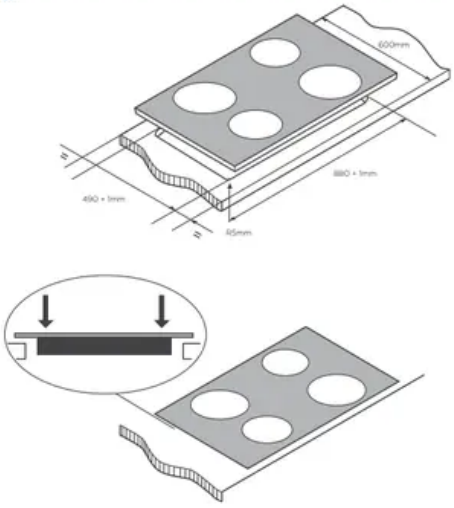

WHC322BC

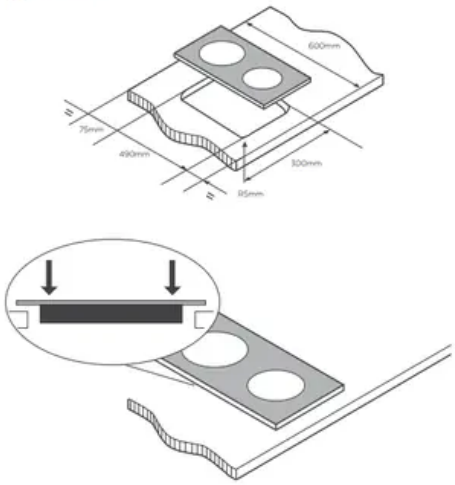

IMPORTANT: It is recommended to centre the bench cutout with equal distance front and back as shown but the product has also been certified to be installed with no clearance between the rear

edge of the cooktop glass and rear wall if required. In doing need to leave sufficient clearance to so, installers still take into account that the glass dimensions are larger than the cut out.

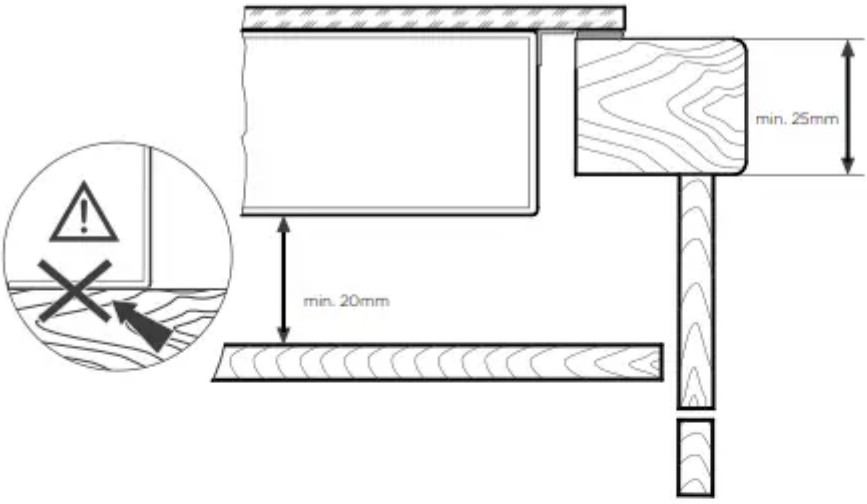

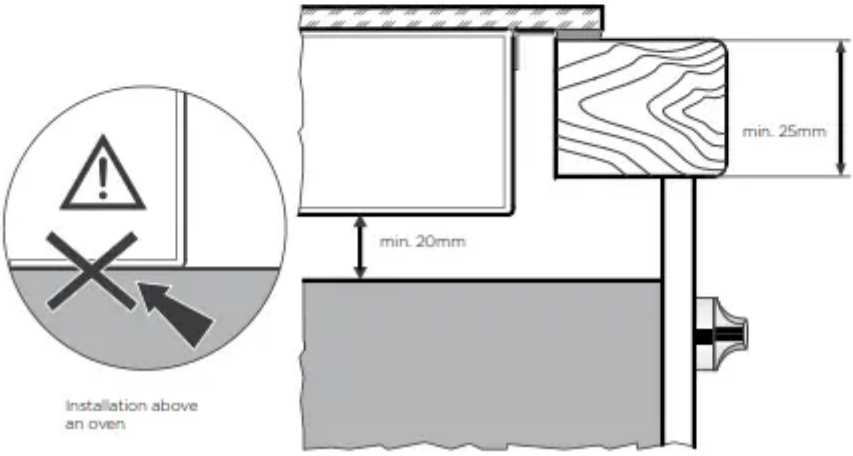

IMPORTANT SAFETY INSTRUCTIONS

Please read the user manual carefully and store in a handy place for later reference.

IMPORTANT: Important – check for any damages or marks - If you find the appliance is damaged or marked, you must report it within 7 days if you wish to claim for damage/ marks under the manufacturer’s warranty. This does not affect your statutory rights.

ENVIRONMENTAL - Information on disposal for users

- Most of the packing materials are recyclable. Please dispose of those materials through your local recycling depot or by placing them in appropriate collection containers.
- If you wish to discard this product, please contact your local authorities and ask for the correct method of disposal.

WARNING: These warnings have been provided in the interest of safety. You MUST read them carefully before installing or using the appliance.

- An authorised person must install this appliance and carry out servicing. (Certificate of Compliance to be retained)
- This appliance must be earthed.
- In order to avoid any potential hazard, the enclosed installation instructions must be followed.
- Do not modify this appliance.
- This appliance must not be used as a space heater.
- Ensure the appliance is switched off before cleaning. This can be done by switching off the appliance via the powerpoint or isolating switch (if available), or the switchboard.
- Do not use steam cleaners, as this may cause moisture build up.
- Always keep the appliance clean.
- Do not use the appliance as a storage area or work surface.
- Do not place or store flammable liquids, highly inflammable materials or fusible objects (e.g. plastic film, plastic, aluminium) on or near the appliance.
- Do not leave the appliance on unattended.
- This appliance is not intended for use by persons (including children) with reduced physical, sensory or mental capabilities, or lack of experience and knowledge, unless they have been given supervision or instruction concerning use of the appliance by a person responsible for their safety.
- Children should be supervised to ensure that they do not play with the appliance.
- Accessible parts will become hot when in use. To avoid burns and scalds children should be kept away.
- During use, this appliance becomes hot. Care should be taken to avoid touching hot surfaces.
- Ensure that all electrical cables are kept well clear of the appliance during use.
- Overheated fats and oils can ignite very quickly. When cooking with fat or oil do not leave the appliance unattended.
- Switch the cooking zones off after each use.

- To maintain safe operation, it is recommended that the product be inspected every 5 years by an authorised service person.
- In the event of faults with the appliance or damage to the glass ceramic (cracks, scratches or splits), the appliance must be switched off and disconnected from the electrical supply to prevent the possibility of an electric shock.

WARNING: Read the following carefully to avoid damage to the appliance.

- Before using the appliance, ensure that all packing materials are removed from the appliance. Remove stickers and film from the glass ceramic.
- Wipe away protective oil using a mild detergent and a clean damp cloth.
- Do not use harsh abrasive cleaners, powder cleaners, steel wool or wax polishes on this appliance.
- With the exception of razor blade scrapers designed for ceramic glass cleaning, (provided with some models or available to purchase through our spare parts) do not use sharp metal implements or utensils on any surface, as these may leave permanent scratches or marks.
- Always clean the appliance immediately after any food spills.
- This appliance may only be used after being built into a suitable benchtop according to the guidelines provided.
- The glass ceramic can be damaged by objects falling onto it. Care should be taken when using heavy cookware to avoid damaging the glass top and edges.
- Cookware made of cast iron, cast aluminium or with damaged bottoms can scratch the glass ceramic if dragged across the surface. Cookware should be lifted in and out of position rather than dragged or pushed.
- Food that melts and boils over can burn onto the glass ceramic surface and should be removed straight away.
- To avoid damaging the glass ceramic and cookware do not allow saucepans or frying pans to boil dry.
- Do not use the cooking zones with empty cookware or without cookware.

NOTE: You must read these warnings carefully before installing or using the appliance. If you need assistance, contact your Customer Care Centre. The manufacturer will not accept liability, should these instructions or any other safety instructions incorporated in this book be ignored

Warning

This content is compiled from multiple sources and is provided for reference purposes only. It may not be complete or fully applicable to all situations. If you are unable to resolve your issue, please contact the product manufacturer or an authorized service provider for official support.

Document generated by ManualsFile