Unit Specifications and Features

Preparation

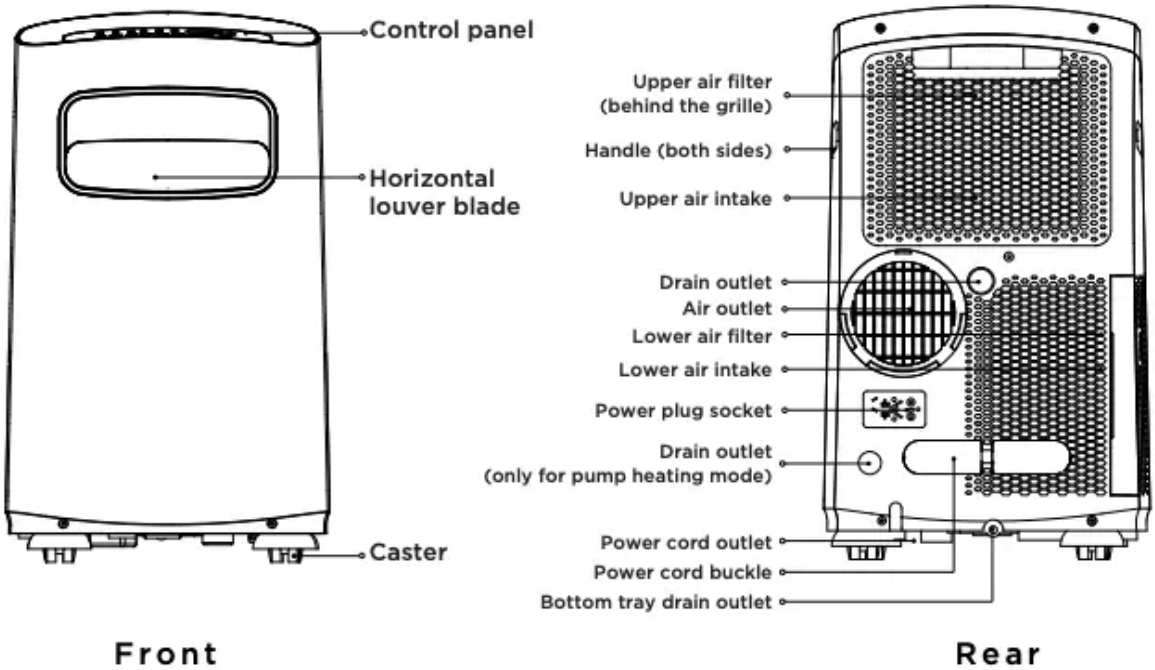

Design and Compliance Notes

Design Notice:

In order to ensure the optimal performance of our products, the design specifications of the unit and remote control are subject to change without prior notice.

Energy Rating Information:

The Energy Rating for this unit is based on an installation using an un-extended exhaust duct without adapters A or B (as shown in the Installation section of this manual).

Unit Temperature Range:

Mode	Temperature Range
Cool	17°C - 35°C (62°F - 95°F)
Dry	13°C - 35°C (55°F - 95°F)
Heat (pump heat mode)	5°C - 30°C (41°F - 86°F)
Heat (electrical heat mode)	≤ 30°C (86°F)

Operating Instructions

Key Pad Features

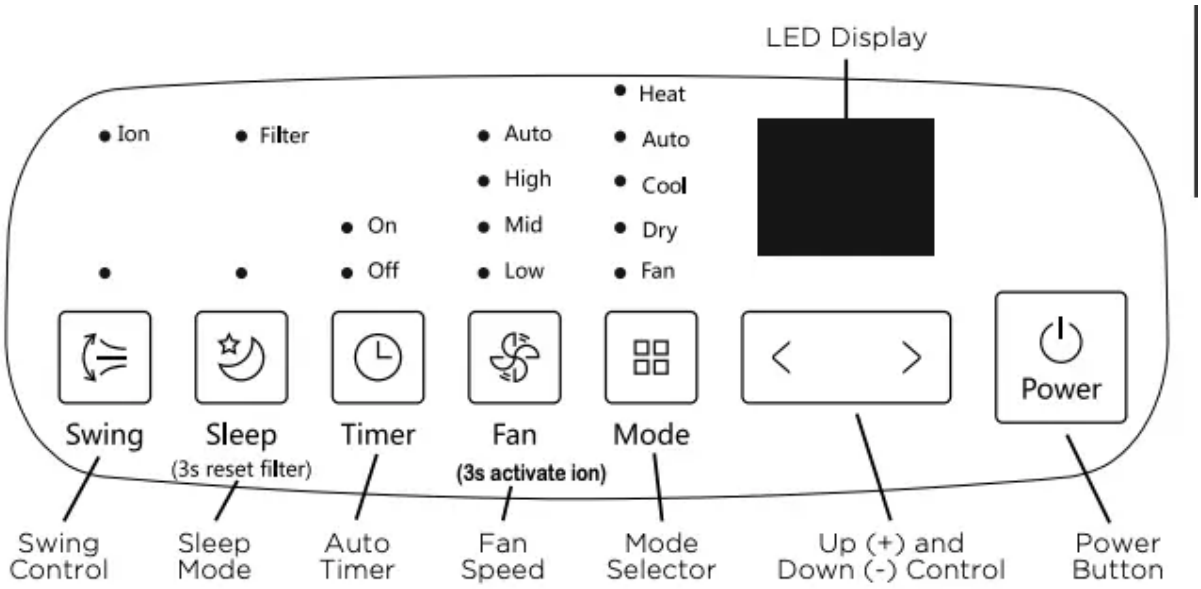

Swing Button (optional)

(Applicable to the models with auto swing feature only)

Used to initiate the Auto swing feature. When the operation is ON, press the SWING button can stop the louver at the desired angle.

Sleep (Eco)/Filter button

Used to initiate the SLEEP/ECO operation.

NOTE After 250 hours of operation, the filter indicator light illuminates. This feature is a reminder to clean the Air Filter for more efficient operation. Press this button for 3 seconds to cancel the reminder.

Timer button

Used to initiate the AUTO ON start time and AUTO OFF stop time program, in conjuction with the + & - buttons. The timer on/off indicator light illuminates under the timer on/off settings.

Fan/Ion button (Ion is optional)

Control the fan speed. Press to select the fan speed in four steps - LOW, MID, HIGH and AUTO. The fan speed indicator light illuminates under different fan settings.

NOTE Press this button for 3 seconds to initiate ION feature. The ion generator is energized and will help to remove pollen and impurities from the air, and trap them in the filter. Press it for 3 seconds again to stop the ION feature

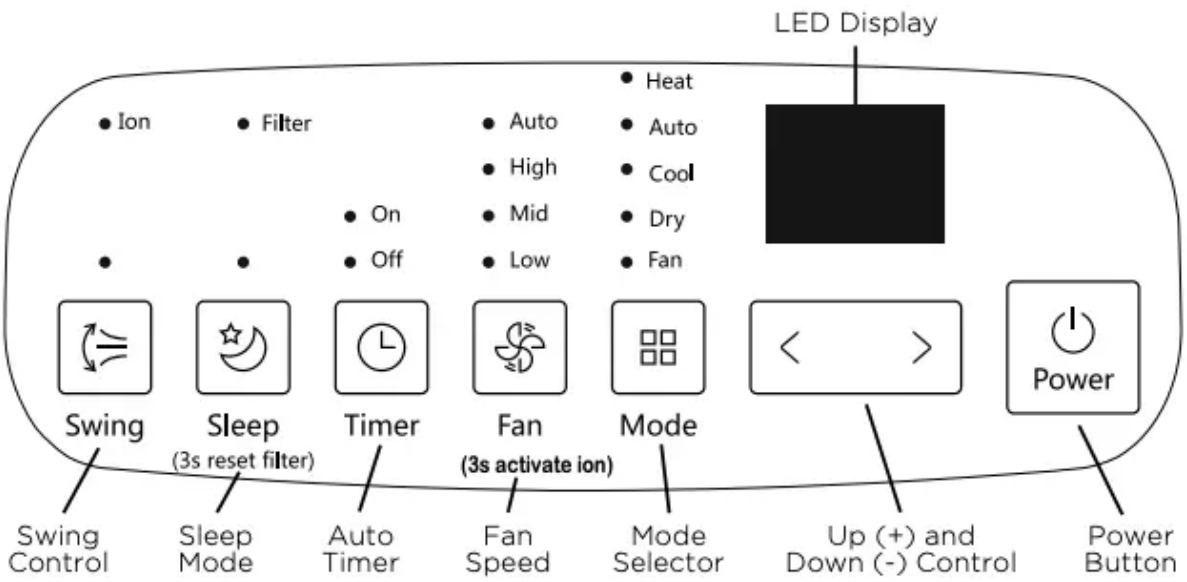

Mode button

Selects the appropriate operating mode. Each time you press the button, a mode is selected in a sequence that goes from AUTO, COOL, DRY, FAN and HEAT (cooling only models without). The mode indicator light illuminates under the different mode settings.

Up (+) and Down (-) buttons

Used to adjust (increasing/decreasing) temperature settings in 1°C/1°F increments in a range of 17°C/62°F to 30°C/86°F or the TIMER setting in a range of 0 ~ 24hrs.

NOTE The control is capable of displaying temperature in degrees Fahrenheit or degrees Celsius. To convert from one to the other, press and hold the Up and Down buttons at the same time for 3 seconds.

Power button

Power switch on/off.

LED display

Shows the set temperature in °C or °F and the Auto-timer settings. While on DRY and FAN modes, it shows the room temperature.

Shows Error codes and protection code:

E1 - Room temperature sensor error.

E2 - Evaporator temperature sensor error.

E3 - Condenser temperature sensor error on some models).

E4 - Display panel communication error.

E7 - Zero-crossing malfunction.

P1 - Bottom tray is full -- Connect the drain hose and drain the collected water away. If protection repeats, call for service.

NOTE When one of the above malfunctions occurs, turn off the unit, and check for any obstructions. Restart the unit, if the malfunction is still present, turn off the unit and unplug the power cord. Contact the manufacturer or its service agents or a similar qualified person for service.

Operation Instructions

COOL operation

- Press the “MODE” button until the “COOL” indicator light comes on.
- Press the ADJUST buttons “+” or “-” to select your desired room temperature. The temperature can be set within a range of 17°C~30°C/62°F~86°F.
- Press the “FAN SPEED” button to choose the fanspeed.

HEAT operation (cooling only models without)

- Press the “MODE” button until the HEAT” indicator light comes on.
- Press the ADJUST buttons “+” or “ - “ to select your desired room temperature. The temperature can be set within a range of 17°C~30°C/62°F~86°F.
- Press the “FAN SPEED” button to choose the fan speed. For some models, the fan speed can not be adjusted under HEAT mode.

DRY operation

- Press the “MODE” button until the “DRY” indicator light comes on.
- Under this mode, you cannot select a fan speed or adjust the temperature. The fan motor operates at LOW speed.
- Keep windows and doors closed for the best dehumidifying effect.
- Do not put the duct to window.

AUTO operation

- When you set the air conditioner in AUTO mode, it will automatically select cooling, heating (cooling only models without), or fan only operation depending on what temperature you have selected and the room temperature.
- The air conditioner will control room temperature automatically round the temperature point set by you.
- Under AUTO mode, you can not select the fan speed.

FAN operation

- Press the “MODE” button until the ”FAN“ indicator light comes on.
- Press the “FAN SPEED” button to choose the fan speed. The temperature can not be adjusted.

- Do not put the duct to window.

TIMER operation

- When the unit is on, press the Timer button will initiate the Auto-off stop program, the TIMER OFF indicator light illuminates. Press the UP or down button to select the desired time. Press the TIMER button again within seconds, the Auto-on start program is initiated. And the TIMER ON indicator light illuminates. Press the up or down button to select the desired Auto-on start time.
- When the unit is off, press the Timer button to initiate the Auto-on start program, press it again within five seconds will initiate the Auto-off stop program.
- Press or hold the UP or DOWN button to change the Auto time by 0.5 hour increments, up to 10 hours, then at 1 hour increments up to 24 hours. The control will count down the time remaining until start.
- The system will automatically revert back to display the previous temperature setting if there is no operation in a 5 seconds period.
- Turning the unit ON or OFF at any time or adjusting the timer setting to 0.0 will cancel the Auto Start/Stop timer program.
- When the malfunctionoccurs, the Auto Start/Stop timed program will also be cancelled.

SLEEP/ECO operation

Press this button, the selected temperature will increase (cooling) or decrease heating) by 1°C/1°F 30 minutes. The temperature will then increase (cooling) or decrease (heating) by another 1°C/1°F after an additional 30 minutes. This new temperature will be maintained for 7 hours before it returns to the originally selected temperature. This ends the Sleep/Eco mode and the unit will continue to operate as originally programmed.

NOTE This feature is unavailabe under FAN or DRY mode.

Other Features

FOLLOW ME/TEMP SENSING

Feature (optional)

NOTE This feature can be activated from the remote control ONLY. The remote control serves as a remote thermostat allowing for the precise temperature control at its location.

To activate the Follow Me/Temp Sensing feature, point the remote control towards the unit and press the Follow Me/Temp Sensing button. The remote display is actual temperature at its location. The remote control will send this signal to the air conditioner every 3 minutes interval until press the Follow Me/Temp Sensing button again. If the unit does not receive the Follow Me/Temp Sensing signal during any 7 minutes interval, the unit will beep to indicate the Follow Me/Temp Sensing mode has ended.

AUTO-RESTART

If the unit breaks off unexpectedly due to the power cut, it will restart with the previous function setting automatically when the power resumes.

WAIT 3 MINUTES BEFORE RESUMING OPERATION

After the unit has stopped, it can not be restarted operation in the first 3 minutes. This is to protect the unit. Operation will automatically start after 3 minutes.

AIR FLOW DIRECTION ADJUSTMENT

The louver can be adjusted automatically. Adjust the air flow direction automatically.

NOTE

On some models the louver can be adjusted manually only):

- When the Power is ON, the louver opens fully.
- Press the SWING button on the panel or remote controller to initiate the Auto swing feature. The louver willl swing up and down automatically.
- Please do not adjust the louver manually

Water drainage

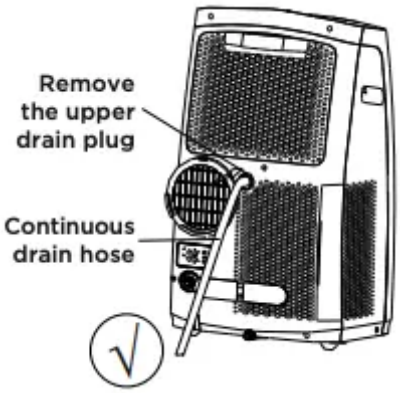

- During dehumidifying modes, remove the upper drain plug from the back of the unit, install the drain connector (5/8” universal female mender) with 3/4” hose (locally purchased). For the models without drain connector, just attach the drain hose to the hole. Place the open end of the hose directly over the drain area in your basement floor.

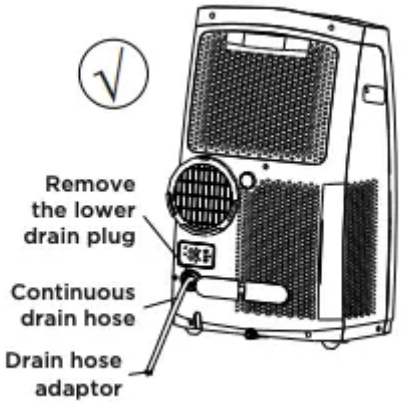

- During heating pump mode, remove the lower drain plug from the back of the unit, install the drain connector (5/8” universal female mender) with 3/4” hose (locally purchased). For the models without drain connector, just attach the drain hose to the hole. Place the open end of the Hose adaptor directly over the drain area in your basement floor.

NOTE Instructions Make sure the hose is secure so there are no leaks. Direct the hose toward the drain, making sure that there are no kinks that will stop the warter flowing. Place the end of the hose into the drain and make sure the end of the hose is down to let the water flow smoothly. (See Figs with). Do never let it up. (See Figs with). When the continuous drain hose is not used, ensure that the corresponding drain plug and knob are installed firmly to prevent leakage.

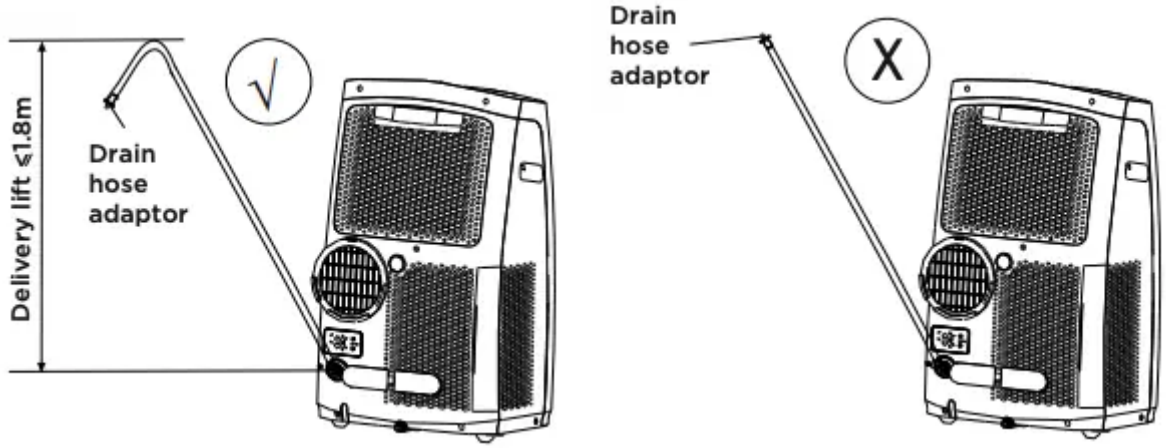

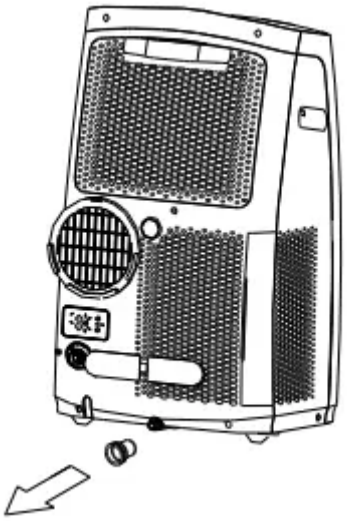

- When the water level of the bottom tray reaches a predetermined level, the unit beeps 8 times, the digital display area shows “P1”. At this time the air conditioning/ dehumidification process will immediately stop. However, the fan motor will continue to operate (this is normal). Carefully move the unit to a drain location, remove the bottom drain plug and let the water drain away. Reinstall the bottom drain plug and restart the machine until the “P1” symbol disappears. If the error repeats, call for service.

NOTE Be sure to reinstall the bottom drain plug firmly to prevent leakage before using the unit.

Installation Instructions

Choosing the Right Location

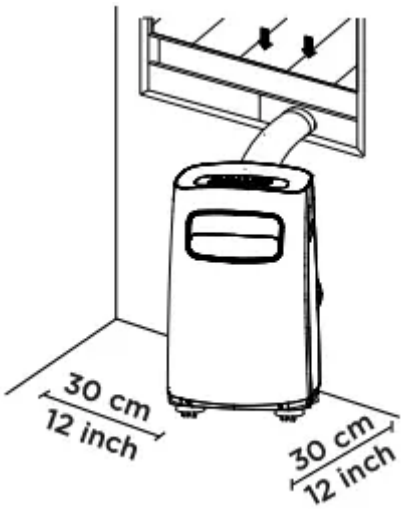

Your installation location should meet the following requirements:

- Make sure that you install your unit on an even surface to minimize noise and vibration.
- The unit must be installed near a grounded plug, and the Collection Tray Drain (found on the back of the unit) must be accessible.

- The unit should be located at least 30 cm (12”) from the nearest wall to ensure proper air conditioning.
- DO NOT cover the Intakes, Outlets or Remote Signal Receptor of the unit, as this could cause damage to the unit.

Note About Fluorinated Gasses

- This air-conditioning unit is a hermetically sealed unit that contains fluorinated gasses. For specific information on the type of gas and the amount, please refer to the relevant label on the unit itself.
- Installation, service, maintenance and repair of this unit must be performed by a certified technician.
- Product uninstallation and recycling must be performed by a certified technician.
- If the system has a leak-detection system installed, it must be checked for leaks at least every 12 months.
- When the unit is checked for leaks, proper record-keeping of all checks is strongly recommended.

NOTE

All the illustrations in the manual are for explanation purpose only. Your machine may be slightly different.

The actual shape shall prevail.

The unit can be controlled by the unit control panel alone or with the remote controller. This manual does not include Remote Controller Operations, see the Remote Controller Instruction>> packed with the unit for details.

Window Installation Kit

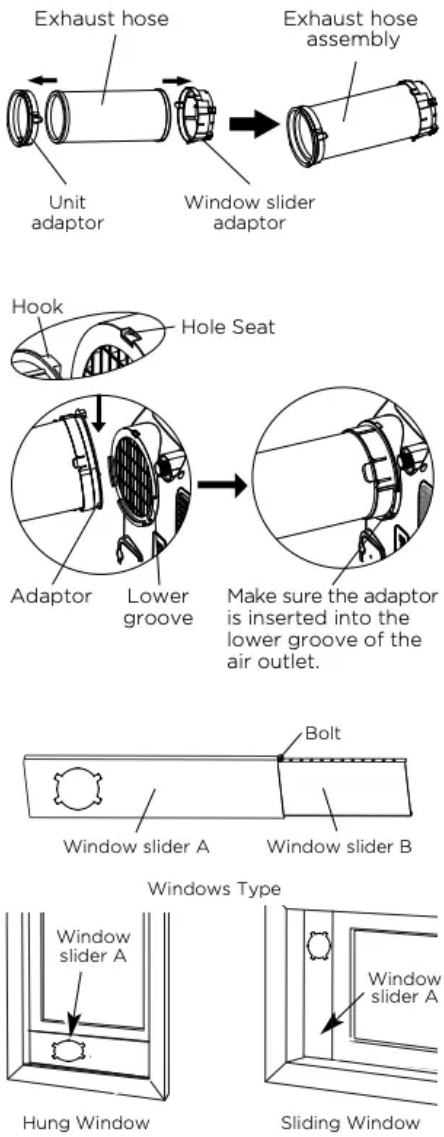

Step One: Preparing the exhaust hose assembly

Press the exhaust hose into the window slider adaptor and unit adaptor, clamp automatically by elastic buckles of the adaptors.

Step Two: Install the exhaust hose assembly to the unit

Insert unit adaptor of the Exhaust hose assembly into the lower groove of the air outlet of the unit while the hook of the adaptor is aligned with the hole seat of the air outlet and slide down the Exhaust hose assembly along the arrow direction for installation.

Step Three: Preparing the adjustable window slider

1. Depending on the size of your window, adjust the size of the window slider.
2. If the length of the window requires two window sliders, use the bolt to fasten the window sliders once they are adjusted to the proper length.

NOTE Once the Exhaust Hose assembly and Adjustable Window Slider are prepared, choose from one of the following two installation methods.

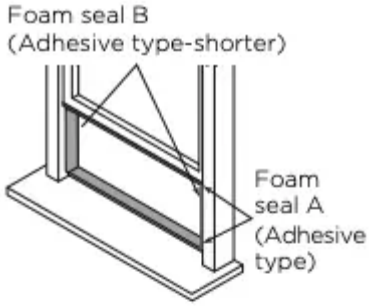

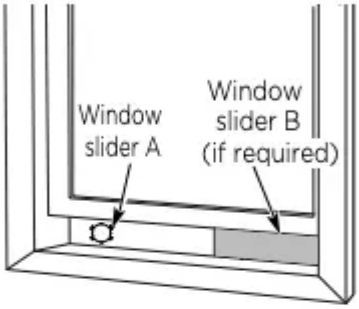

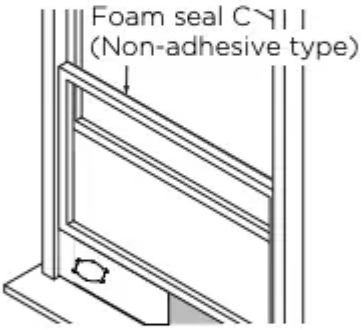

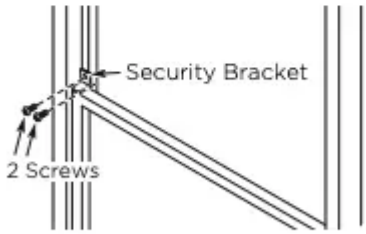

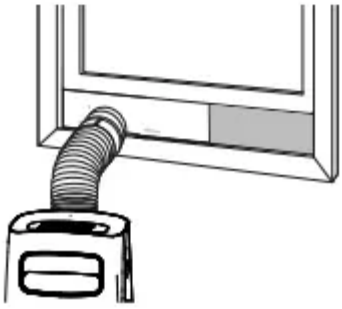

Type 1: Hung window installation

1. Cut the adhesive foam seal A and B strips to the proper lengths, and attach them to the window sash and frame as shown.

2. Insert the window slider assembly into the window opening.

3. Cut the non-adhesive foam seal C strip to match the width of the window. Insert the seal between the glass and the window frame to prevent air and insects from getting into the room.

4. If desired, install the security bracket with 2 screws as shown.

5. Insert the window slider adaptor into the hole of the window slider.

Type 2: Sliding window installation

1. Cut the adhesive foam seal A and B strips to the proper lengths, and attach

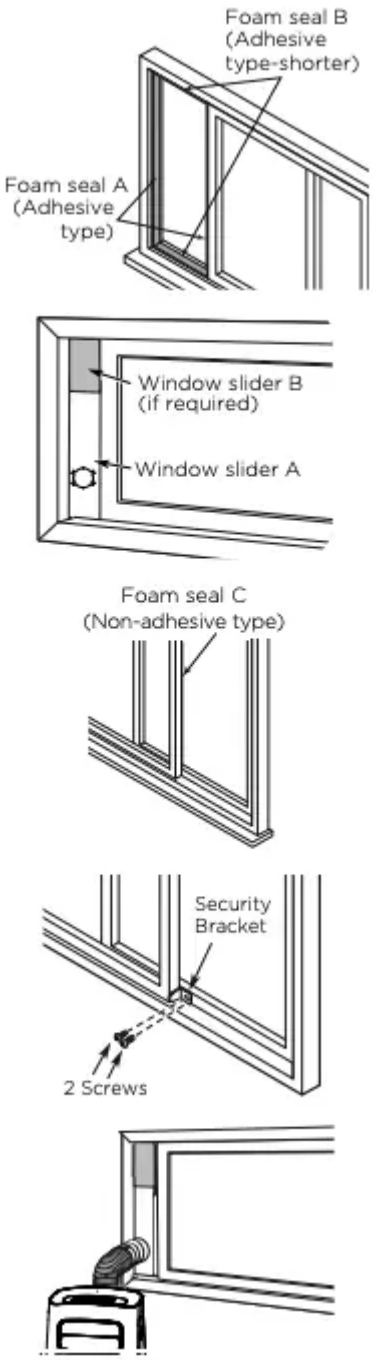

them to the window sash and frame as shown.

2. Insert the window slider assembly into the window opening.

3. Cut the non-adhesive foam seal C strip to match the window height. Insert the foam seal between the glass and the window frame to prevent air and insects from getting into the room.

4. If desired, install the security bracket with 2 screws as shown.

5. Insert the window slider adaptor into the hole of the window slider.

NOTE To ensure proper function, DO NOT overextend or bend the hose. Make sure that there is no obstacle around the air outlet of the exhaust hose (in the range of 500mm) in order to the exhaust system works properly. All the illustrations in this manual are for explanation purpose only. Your air conditioner may be slightly different. The actual shape shall prevail.

Care and Cleaning

Safety Precautions

- Always unplug the unit before cleaning or servicing.
- DO NOT use flammable liquids or chemicals to clean the unit.
- DO NOT wash the unit under running water. Doing so causes electrical danger.
- DO NOT operate the machine if the power supply was damaged during cleaning. A damaged power cord must be replaced with a new cord from the manufacturer.

Clean the Air Filter

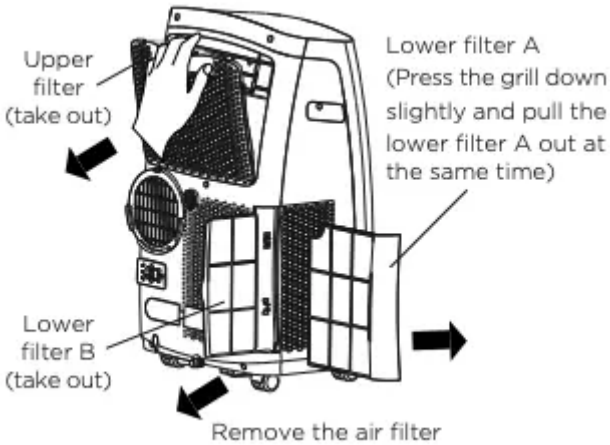

Maintenance Tips

- Be sure to clean the air filter every weeks for optimal performance.
- The water collection tray should be drained immediately after P1 error occurs, and before storage to prevent mold.
- In households with animals, you will have to periodically wipe down the grill to prevent blocked airflow due to animal hair.

Clean the Unit

Clean the unit using a damp, lint-free cloth and mild detergent. Dry the unit with a dry, lint-free cloth.

Store the Unit When Not in Use

- Drain the unit’s water collection tray according to the instructions in the following section.
- Run the appliance on FAN mode for 12 hours in a warm room to dry it and prevent mold.
- Turn off the appliance and unplug it.

- Clean the air filter according to the instructions in the previous section. Reinstall the clean, dry filter before storing.
- Remove the batteries from the remote control.

NOTE Be sure to store the unit in a cool, dark place. Exposure to direct sunshine or extreme heat can shorten the lifespan of the unit.

Troubleshooting Tips

Faults Diagnosis

Please check the machine according to the following form before asking for maintenance:

Problem	Possible Cause	Troubleshooting
Unit does not turn on when pressing ON/ OFF button	P1 Error Code.	The water collection tray is full. Turn off the unit, drain the water from the water collection tray and restart the unit.
	In COOL mode: room temperature is lower than the set temperature.	Reset the temperature.
Unit does not cool well	The air filter is blocked with dust or animal hair.	Turn off the unit and clean the filter according to instructions.
	Exhaust hose is not connected or is blocked.	Turn off the unit, disconnect the hose, check for blockage and reconnect the hose.
	The unit is low on refrigerant	Call a service technician to inspect the unit and top off refrigerant.
	Temperature setting is too high	Decrease the set temperature.
	The windows and doors in the room are open.	Make sure all windows and doors are closed.
	The room area is too large	Double-check the cooling area.
	There are heat sources inside the room.	Remove the heat sources if possible.
The unit is noisy and vibrates too much	The ground is not level.	Place the unit on a flat, level surface.
	The air filter is blocked with dust or animal hair.	Turn off the unit and clean the filter according to instructions.
The unit makes a gurgling sound	This sound is caused by the flow of refrigerant inside the unit	This is normal.

Remote Control Operating Instructions

Function Buttons

Before you begin using your new air conditioner, make sure to familiarize yourself with its remote control. The following is a brief introduction to the remote control itself. For instructions on how to operate your air conditioner, refer to the How to Use Basic Functions section of this manual.

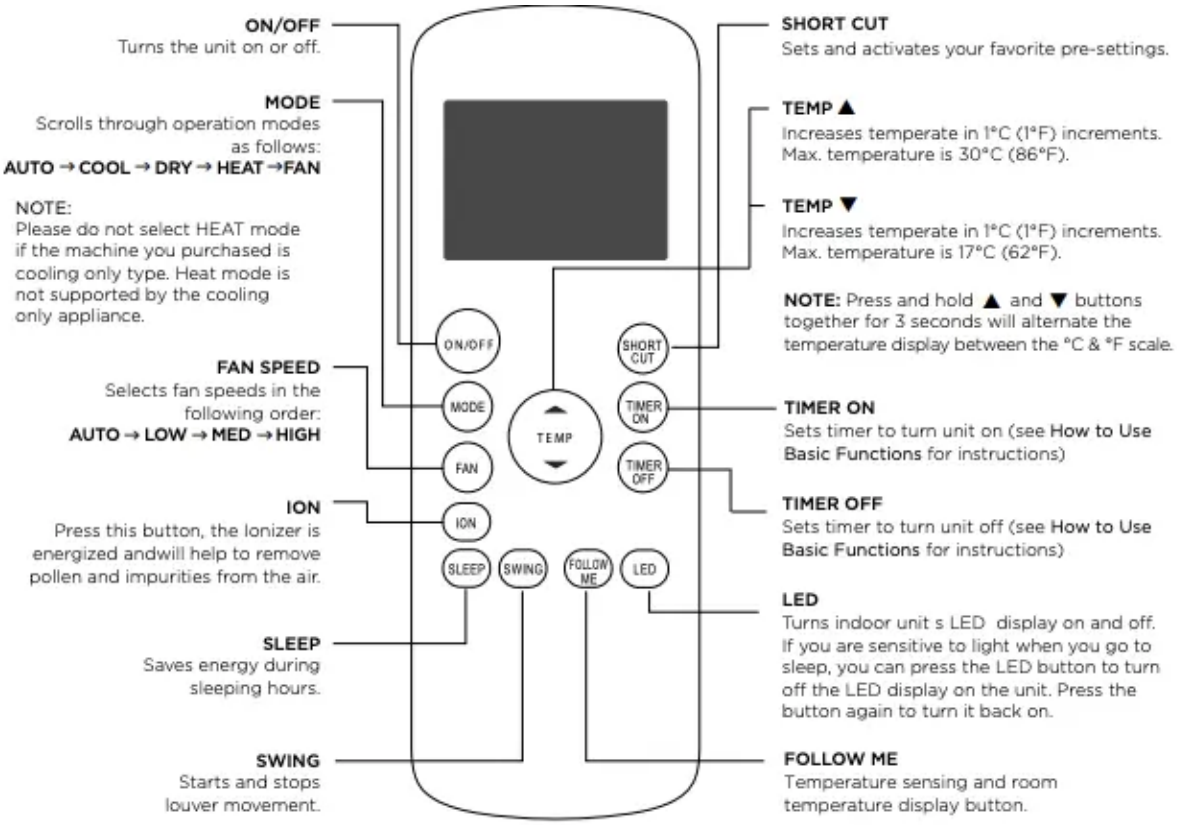

NOTE Swing, Ion and Follow me features are optional. RG57H1(B)/BG(C)E-M without med fan speed.

Handing the Remote Control

NOT SURE WHAT A FUNCTION DOES?

Refer to the How to Use Basic Functions and How to Use Advanced Functions sections of this manual for a detailed description of how to use your air conditioner.

SPECIAL NOTE

Button designs on your unit may differ slightly from the example shown. If the unit does not have a particular function, pressing that function's button on the remote control will have no effect. When there are wide differences between Remote control Illustration and "USER'S MANUAL" on function description, the description of "USER'S MANUAL" shall prevail.

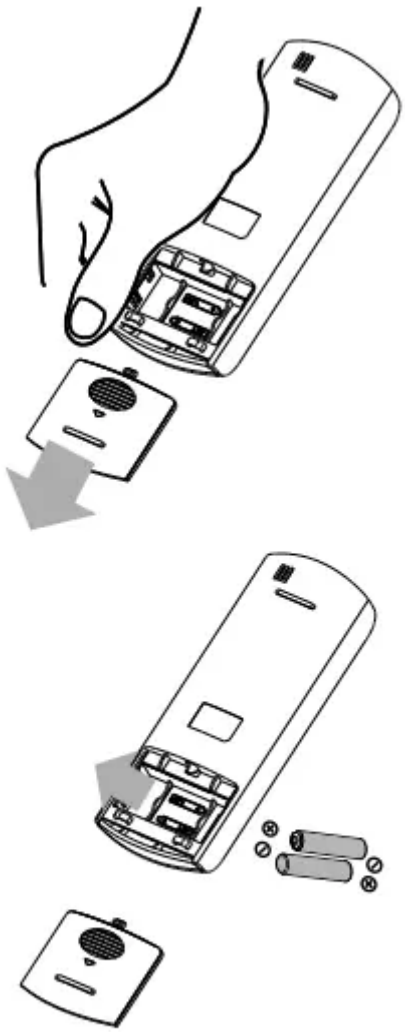

INSERTING AND REPLACING BATTERIES

Your air conditioning unit comes with two AAA batteries. Put the batteries in the remote control before use.

1. Slide the back cover from the remote control downward, exposing the battery compartment.

2. Insert the batteries, paying attention to match up the (+) and (-) ends of the batteries with the symbols inside the battery compartment.

3. Slide the battery cover back into place.

BATTERY NOTES

For optimum product performance:

- Do not mix old and new batteries, or batteries of different types.
- Do not leave batteries in the remote control if you don’t plan on using the device for more than 2 months.

BATTERY DISPOSAL

Do not dispose of batteries as unsorted municipal waste. Refer to local laws for proper disposal of batteries.

TIPS FOR USING REMOTE CONTROL

- The remote control must be used within 8 meters / feet of the unit.
- The unit will beep when remote signal is received.
- Curtains, other materials and direct sunlight can interfere with the infrared signal receiver.

		• Remove batteries if the remote will not be used more than 2 months.

Remote LED Screen Indicators

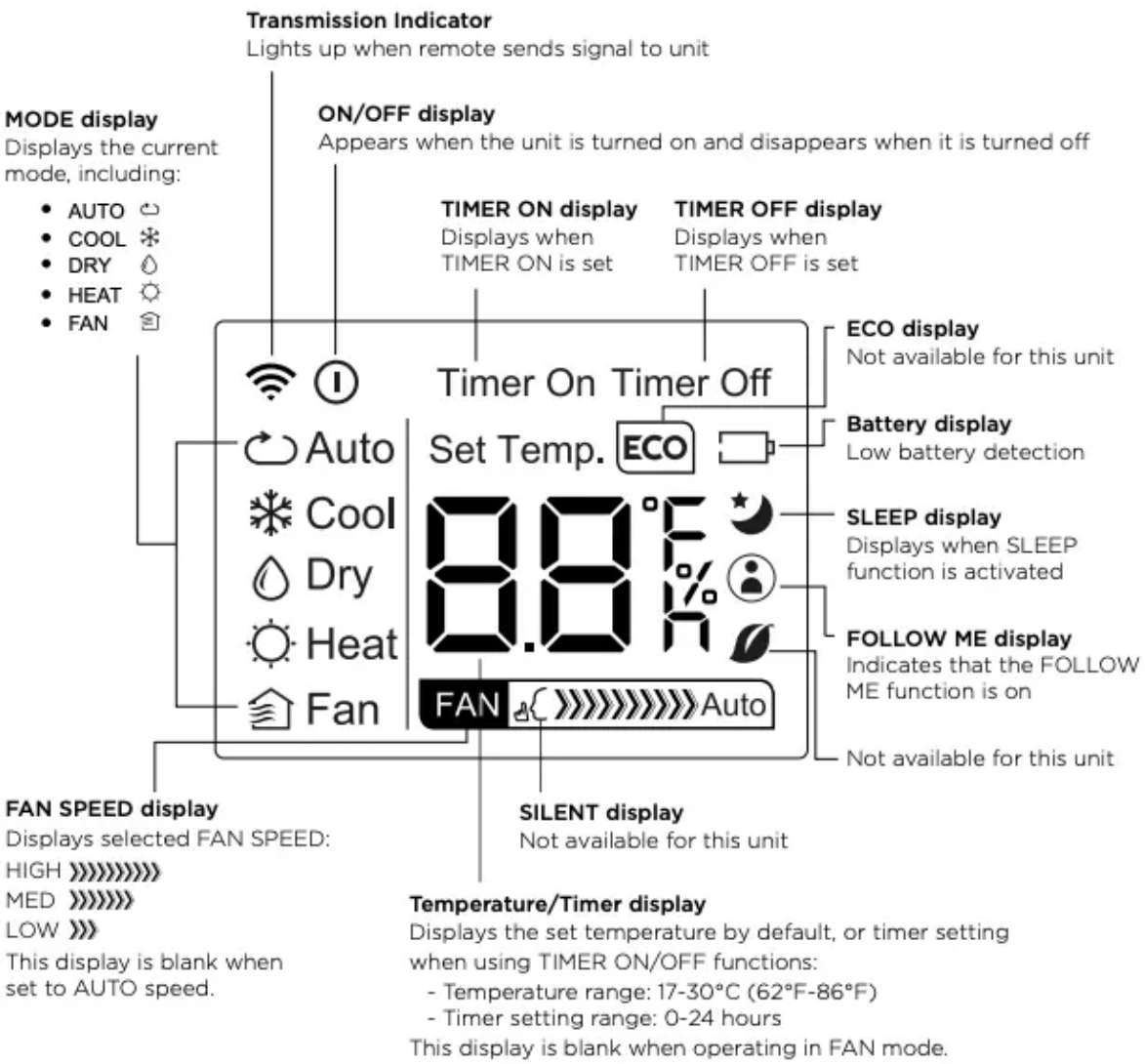

How to Use the Basic Fuctions

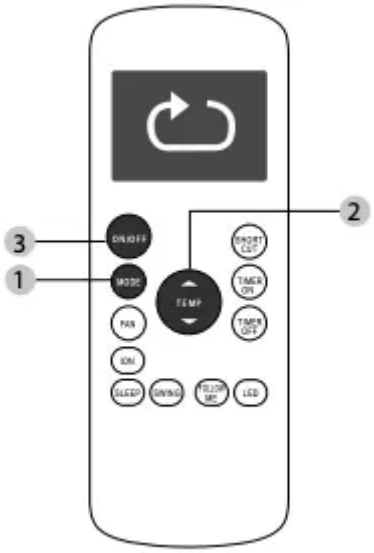

SETTING TEMPERATURE

The operating temperature range for units is 17-30°C (62°F-86°F). You can increase or decrease the set temperature in 1°C (1°F) increments.

AUTO operation

In AUTO mode, the unit will automatically select the COOL, FAN, HEAT or DRY mode based on the set temperature.

1. Press the MODE button to select Auto mode.

2. Set your desired temperature using the Temp ▲ or Temp ▼ button.

3. Press the ON/OFF button to start the unit.

NOTE FAN SPEED can't be set in AUTO mode

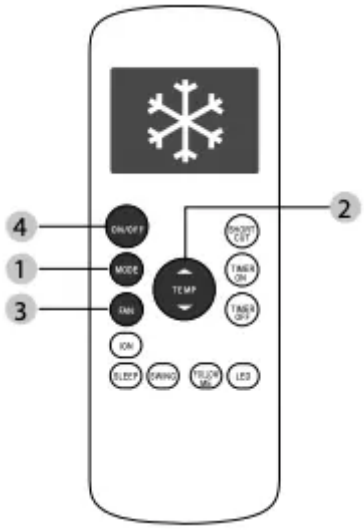

COOL operation

1. Press the MODE button to select COOL mode.

2. Set your desired temperature using the Temp ▲ or Temp ▼ button.

3. Press the FAN button to select the fan speed: AUTO, LOW, MED,or HIGH.

4. Press the ON/OFF button to start the unit.

DRY operation(dehumidifying)

1. Press the MODE button to select DRY mode.

2. Set your desired temperature using the Temp ▲ or Temp ▼ button.

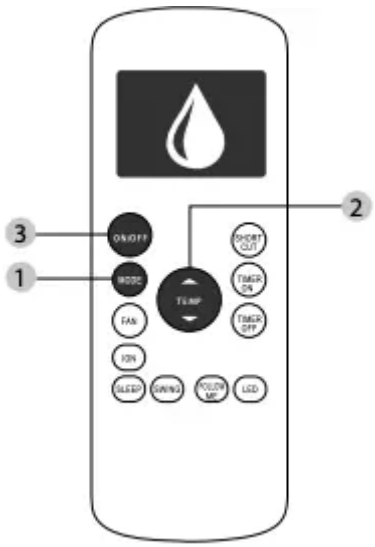		3. Press the ON/OFF button to start the unit. **NOTE** FAN SPEED can't be set in DRY mode.
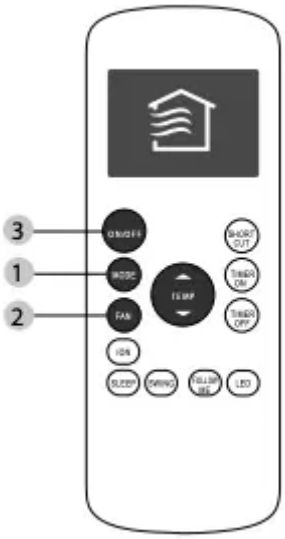		**FAN operation** 1. Press the MODE button to select FAN mode. 2. Press FAN button to select the fan speed: AUTO, LOW, MED or HIGH. 3. Press the ON/OFF button to start the unit. **NOTE** You can't set temperature in FAN mode. As a result, your remote control's LCD screen will not display temperature.
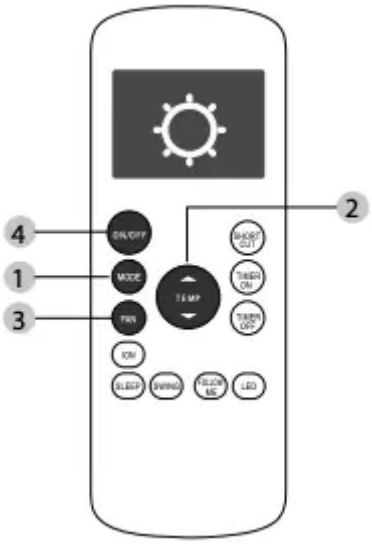		**HEAT operation** 1. Press the MODE button to select HEAT mode. 2. Set your desired temperature using the Temp ▲ or Temp ▼ button. 3. Press the FAN button to select the fan speed: AUTO, LOW, MED, or HIGH. 4. Press the ON/OFF button to start the unit. **NOTE** As outdoor temperature drops, the performance of your unit s HEAT function may be affected. In such

		instances, we recommend using this air conditioner in conjunction with other heating appliance.

Setting the Timer Fuctions

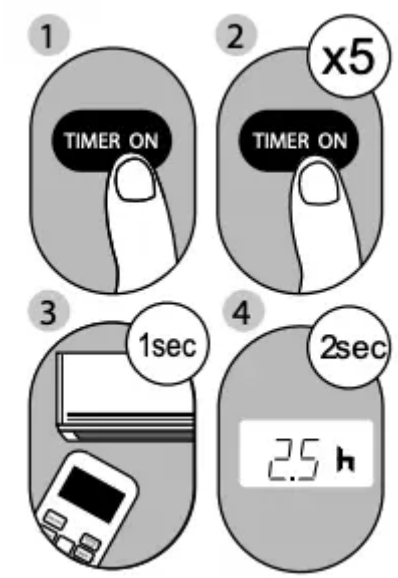

Example: Setting unit to turn on after 2.5 hours.

Your air conditioning unit has two timer-related functions:

TIMER ON - sets the amount of timer after which the unit will automatically turn on.

TIMER OFF - sets the amount of time after which the unit will automatically turn off.

TIMER ON function

The TIMER ON function allows you to set a period of time after which the unit will automatically turn on, such as when you come home from work.

1. Press the TIMER ON button. By default, the last time period that you set and an “h” (indicating hours) will appear on the display

NOTE This number indicates the amount of time after the current time that you want the unit to turn on. For example, if you set TIMER ON for 2 hours, “2.0h“ will appear on the screen, and the unit will turn on after 2 hours.

2. Press the TIMER ON button repeatedly to set the time when you want the unit to turn on.

3. Wait 2 seconds, then the TIMER ON function will be activated. The digital display on your remote control will then return to the temperature display.

TIMER OFF function

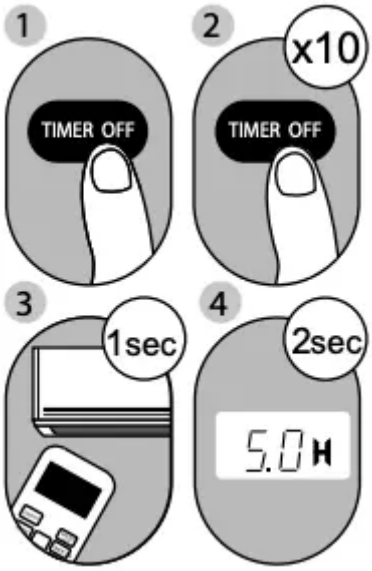

Example: Setting unit to turn off after 5 hours.

The TIMER OFF function allows you to set a period of time after which the unit will automatically turn off, such as when you wake up.

1. Press the TIMER OFF button. By default, the last time period that you set and an “h” (indicating hours) will appear on the display.

NOTE This number indicates the amount of time after the current time that you want the unit to turn off. For example, if you set TIMER OFF for 2 hours, “2.0h“ will appear on the screen, and the unit will turn off after 2 hours.

2. Press the TIMER OFF button repeatedly to set the time when you want the unit to turn off.

3. Wait 2 seconds, then the TIMER OFF function will be activated. The digital display on your remote control will then return to the temperature display.

Continue to press TIMER ON or TIMER OFF until desired time is reached.

NOTE When setting the TIMER ON or TIMER OFF functions, up to 10 hours, the time will increase in 30 minute increments with each press. After 10 hours and up to 24, it will increase in 1 hour increments. The timer will revert to zero after 24 hours. You can turn off either function by setting its timer to “0.0h“.

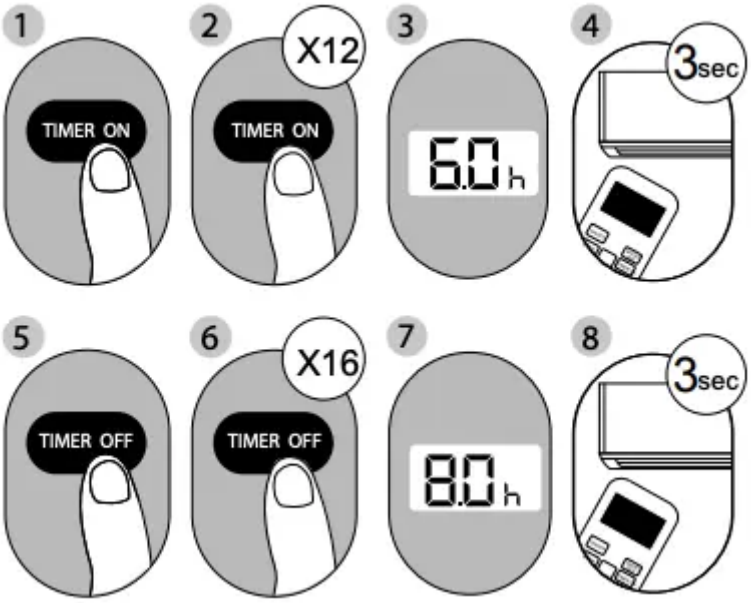

Setting both TIMER ON and TIMER OFF at the same time

Keep in mind that the time periods you set for both functions refer to hours after the current time. For example, say that the current time is 1:00 PM, and you want the unit to turn on automatically at 7:00 PM. You want it to operate for 2 hours, then automatically turn off at 9:00 PM.

Do the following (side figure):

Example: Setting the unit to turn on after 6 hours, operate for 2 hours, then turn off (see the figure below)

Your remote display

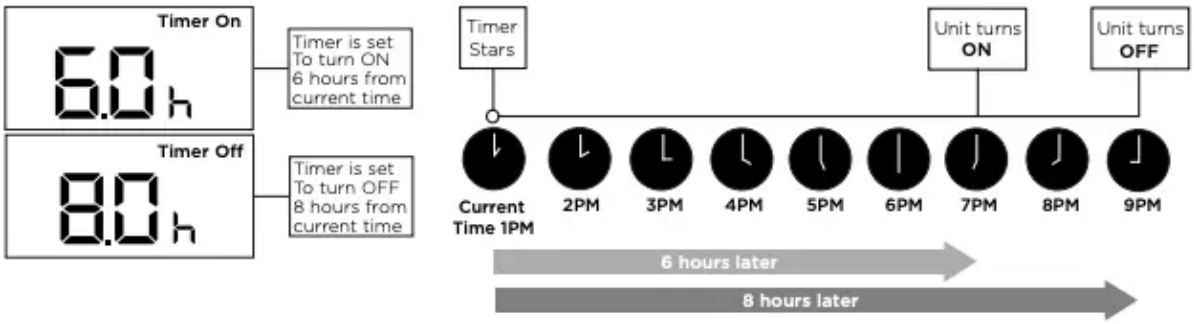

Warning

This content is compiled from multiple sources and is provided for reference purposes only. It may not be complete or fully applicable to all situations. If you are unable to resolve your issue, please contact the product manufacturer or an authorized service provider for official support.

Document generated by ManualsFile