User manual Refrigerator

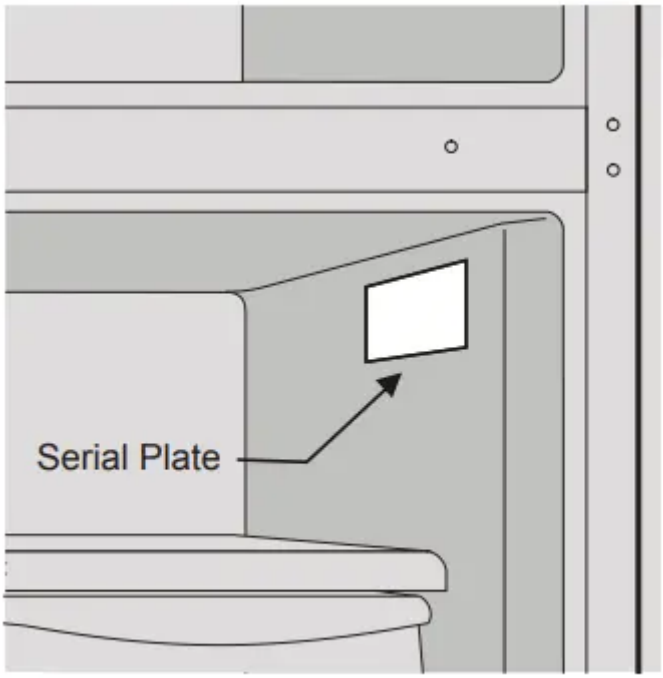

Serial Number Location

FEATURES (FRIGIDAIRE)

***Features may vary according to model**

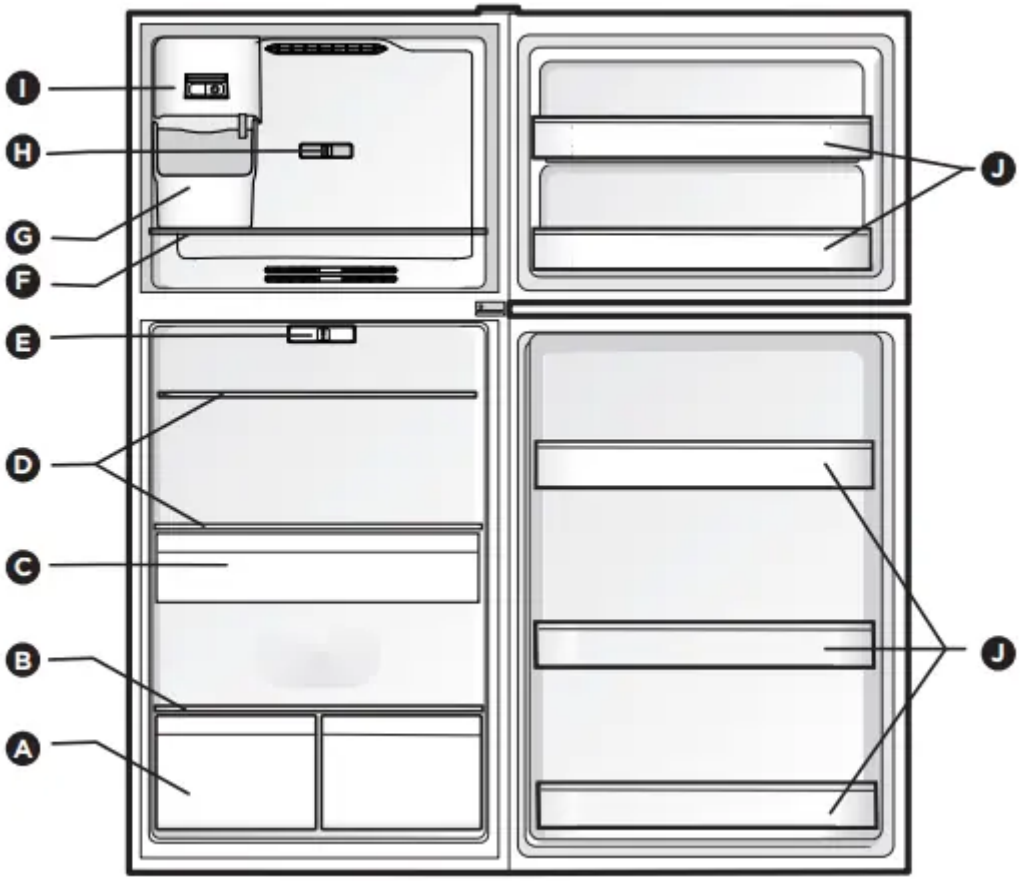

A Crisper Drawers
B Crisper Cover
C Deli Drawer*
D Full Shelves
E Refrigerator Control
F Freezer Shelf
G Ice Bucket*
H Freezer Control
I Ice Maker*
J Fixed Door Bins

IMPORTANT Accessories are available for your appliance and may be purchased at Frigidaire.com or by calling 1-800-374-4432 (Frigidaire.ca or 1-800-265-8352 in Canada) or from an authorized seller.

***Features may vary according to model**

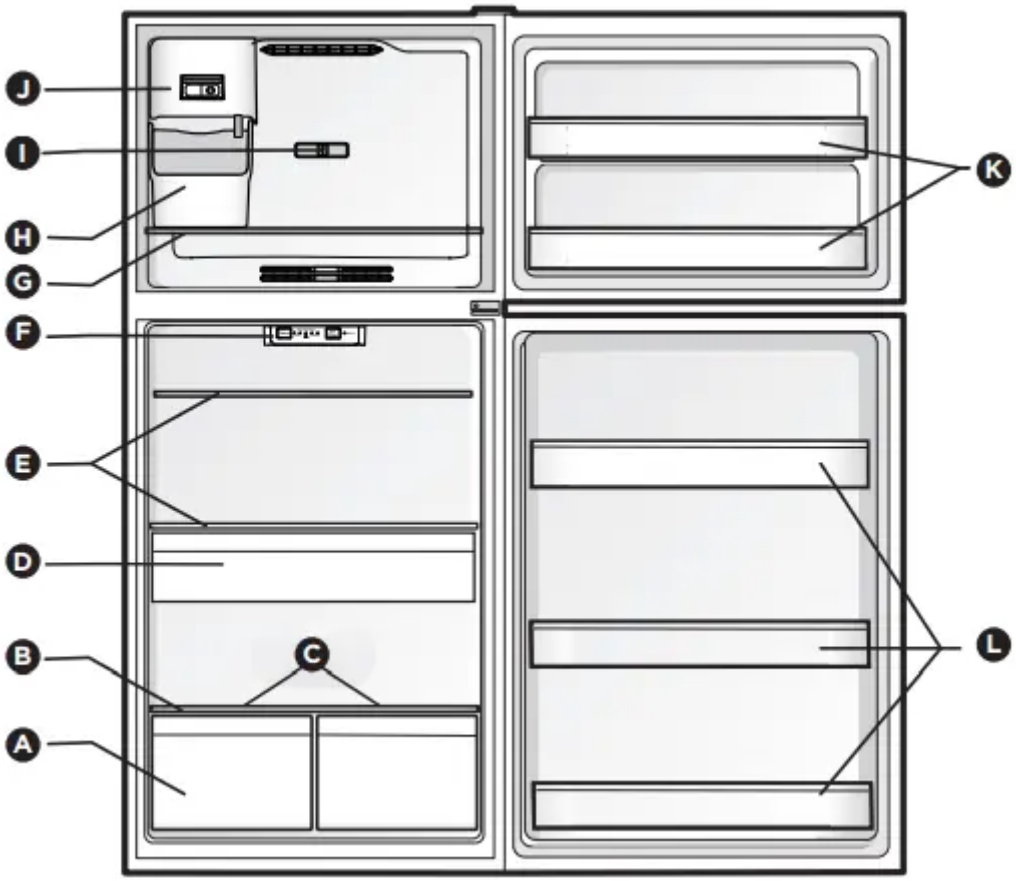

A Crisper Drawers
B Crisper Cover
C Auto Humidity Control Membrane
D Full Width Deli Drawer
E Full Shelves

F Refrigerator Control
G Freezer Shelf
H Ice Bucket*
I Freezer Control
J Ice Maker*
K Fixed Door Bins
L Adjustable Door Bins

IMPORTANT Accessories are available for your appliance and may be purchased at Frigidaire.com or by calling 1-800-374-4432 (Frigidaire.ca or 1-800-265-8352 in Canada) or from an authorized seller.

INSTALLATION

This Use & Care Manual provides general operating instructions for your model. Use the appliance only as instructed in this Use & Care Manual. Before starting the unit, follow these important first steps.

IMPORTANT

Cleaning your Refrigerator

Remove tape and glue residue from surfaces before turning the refrigerator on. Rub a small amount of liquid dish soap over the adhesive with your fingers. Rinse with warm water and dry with a soft cloth.

Do not use sharp instruments, rubbing alcohol, flammable fluids, or abrasive cleaners to remove tape or glue. These products can damage the surface of your refrigerator.

After you remove all of the package materials, clean the inside of your refrigerator before using it. See the CARE AND CLEANING section in this manual.

Moving your Refrigerator

Your refrigerator is heavy. When moving the refrigerator for cleaning or service, raise the anti-tip bracket (see “Setting the Anti-tip Brackets”). Also be sure to cover the floor with cardboard or hardboard to avoid floor damage. Always pull the refrigerator straight out when moving it. Do not wiggle or “walk” the refrigerator when trying to move it as you could damage the floor.

Location

- Choose a place that is near a grounded electrical outlet. Do Not use an extension cord or an adapter plug.
- If possible, place the refrigerator out of direct sunlight and away from the range, dishwasher or other heat sources.

- The refrigerator must be installed on a floor that is level and strong enough to support a fully loaded refrigerator.
- Consider water supply availability for models equipped with an automatic ice maker. If you do not hook up water to the refrigerator, remember to turn the ice maker off.

WARNING

This appliance is intended to be used in household and similar applications such as:

- staff kitchen areas in shops, offices and other working environments;
- farm houses and by clients in hotels, motels and other residential type environments;
- bed and breakfast type environments;
- catering and similar nonretail applications.

CAUTION

Do not install the refrigerator where the temperature will drop below 50°F (10°C) or rise above 110°F (43°C). The compressor will not be able to maintain proper temperatures inside the refrigerator.

Do not block the toe grille on the lower front of your refrigerator. Sufficient air circulation is essential for the proper operation of your refrigerator.

Installation

NOTE

If your refrigerator is placed with the door hinge side against a wall, you may have to allow additional space for the handle so the door can be opened wider.

Guidelines for final positioning of your refrigerator:

- All 4 corners of the cabinet must rest firmly on the floor.
- The cabinet should be level at the front and rear.
- The sides should tilt ¼" (6 mm) from front to back (to ensure that doors close and seal properly).
- Doors should align with each other and be level.

Setting the Anti-tip Brackets

The anti-tip brackets are located on the lower front corners of the cabinet. Lower the anti-tip brackets on each side clockwise until they contact the floor. Do not raise the cabinet.

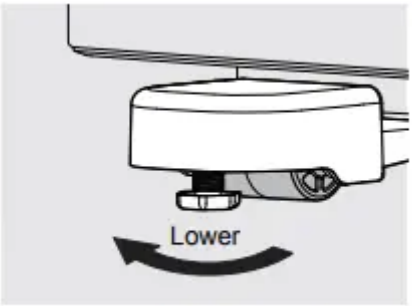

Anti-Tip Bracket

DOOR REMOVAL

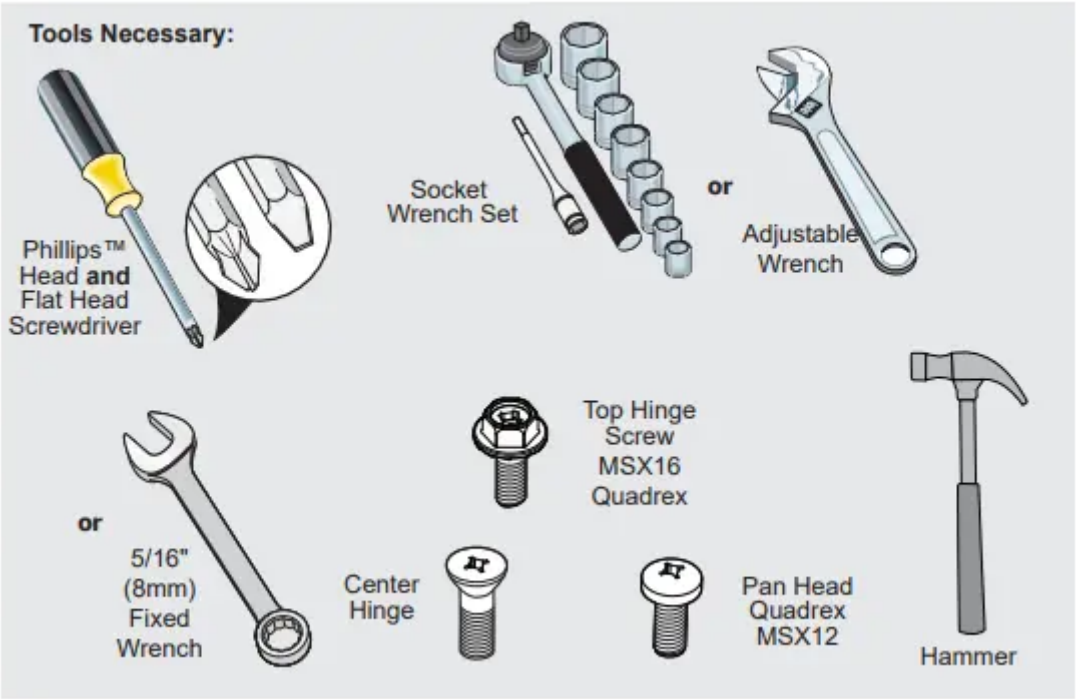

Door Removal/Reversal (some models)

CAUTION Be sure the doors are set aside in a secure position where they cannot fall and cause personal injury.

NOTE The direction in which your refrigerator doors open (door swing) can be reversed, from left to right or right to left, by moving the door hinges from one side to the other. Reversing the door swing should be performed by a qualified person.

IMPORTANT Before you begin, turn the refrigerator temperature control to OFF and remove the electrical power cord from the wall outlet. Remove any food from door shelves.

1. Unplug your refrigerator.

2. Remove the top hinge cover (some models--see Figure 1A). For models without the hinge cover, go to step 3.

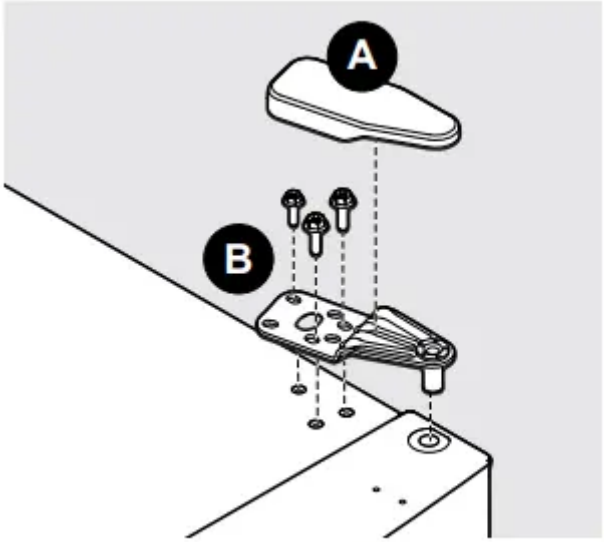

Figure 1

3. Using a 5/16 in. socket, loosen the 3 screws from the top hinge (see Figure 2).

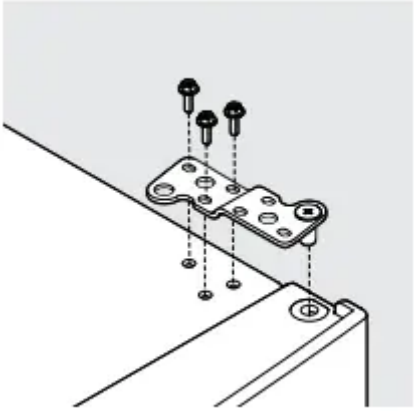

Figure 2

4. Carefully open the freezer door. Lift the loosened the top hinge and lift the door off of center hinge pin. Set the door aside.

NOTE * We do not recommend to using an electric tool to unscrew and screw parts because it may damage the screw threads or cause screw heads to be stripped off. However, if you have an electric tool with torque control, the torque cannot be larger than 6 N·m (53 in.lb).

NOTE Keep the screws so they can be used on the opposite side.

IMPORTANT Place the door on a padded surface to avoid damage.

5. Unscrew the center hinge pin using an adjustable wrench and set it aside (see Figure 3).

6. Open the refrigerator door and lift the door off of the bottom hinge pin. Set the door aside.

7. Remove the 3 center hinge screws using a Phillips screwdriver and set the center hinge aside (see Figure 3)

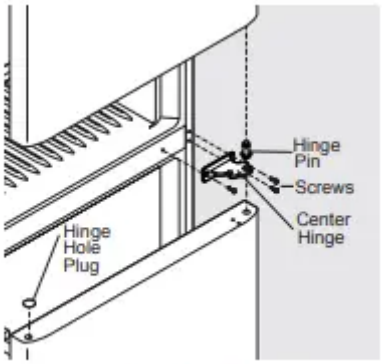

Figure 3

8. Remove the 3 pan head screws on the opposite side of the center hinge (Figure 4) and install them in the holes where the center hinge was attached.

Figure 4

9. Remove both lower hinge covers.

10. Remove the screw from the door stopper with a Phillips screwdriver (see Figure 5).

11. Unscrew the bottom hinge pin from the right-hand position using an adjustable wrench (see Figure 5).

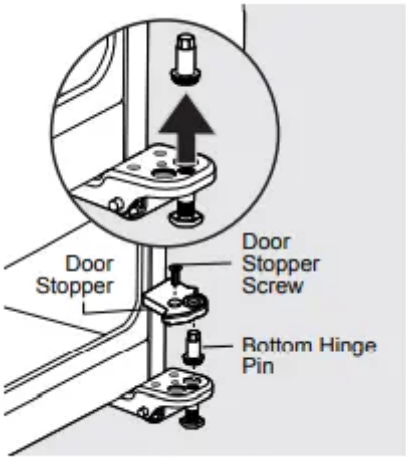

Figure 5

12. Install the bottom hinge pin in the left-hand hole of the left-hand lower hinge (see Figure 6).

13. Flip the door stopper. Reinstall the door stopper on top of the bottom hinge with the screw (see Figure 6).

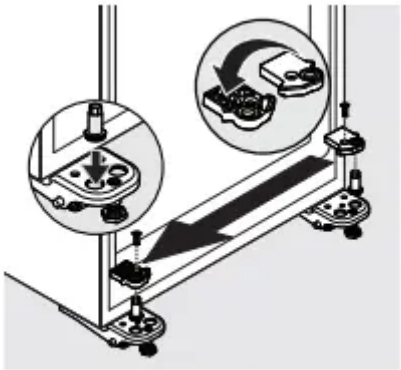

Figure 6

Door Bearing Reversal For Freezer and Refrigerator Doors

1. With a flathead screwdriver, pry out the center hinge bearing from the top of the refrigerator door (see Figure 7A).

2. With a flathead screwdriver, pry out the center hinge bearing plug from the opposite side of the refrigerator door (see Figure 7B).

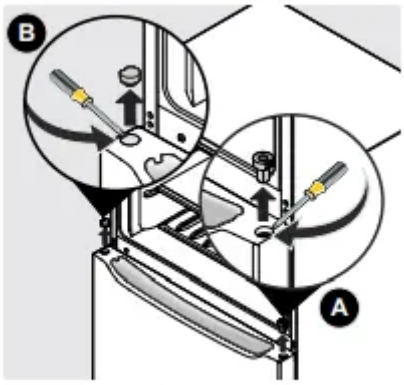

Figure 7

3. Install the hinge bearing on the opposite side by tapping it with a hammer until it is flush with the end cap. Repeat the process for the plug.

4. Reverse the door handle (see DOOR HANDLE INSTALLATION section if applicable).

5. Flip the refrigerator door over and remove the screw from the door closer using a Phillips screwdriver and set it aside (see Figure 8A).

6. Pry out the hinge bearing from the door with a straight screwdriver (see Figure 8B).

7. Install the bottom hinge bearing on the opposite side of the door (see Figure 8C).

8. Flip the door closer over and install on the opposite side of the door (see Figure 8C).

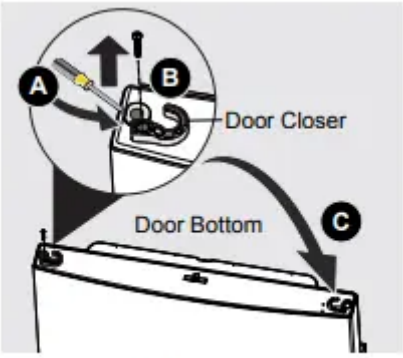

Figure 8

9. Repeat steps 1-8 for the freezer door.

10. Lower the refrigerator door in the opened position on the bottom hinge pin and close the door (see Figure 9).

Figure 9

11. Screw in and tighten the center hinge pin using an adjustable wrench.

12. Lower the freezer door in the opened position over the center hinge pin and close the door (see Figure 10).

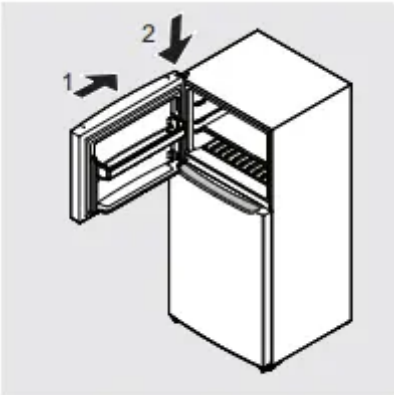

Figure 10

Place the lower hinge cover between the freezer door and refrigerator door to keep it level while attaching the top hinge (see Figure 11).

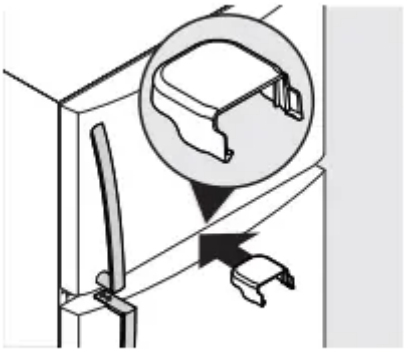

Figure 11

13. Attach the top hinge using a 5/16 in. socket, and then place the top hinge cover (some models) on the unit (see Figure 12).

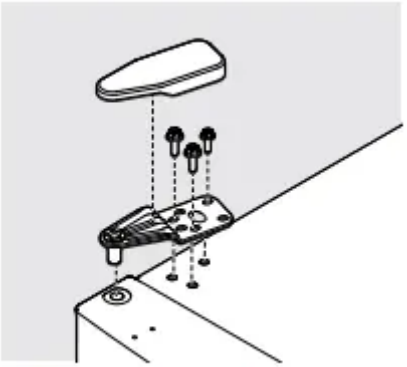

Figure 12

14. For models without the hinge cover, flip the hinge cover over and attach it using a 5/16 in. socket (see Figure 13).

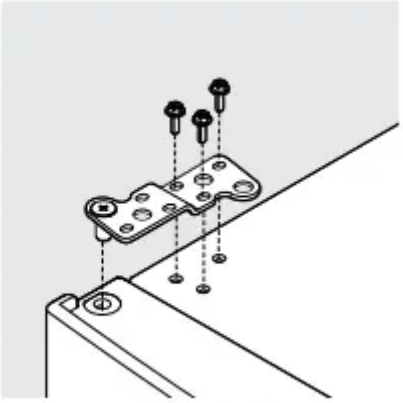

Figure 13

15. Replace the lower hinge covers.

CONTROLS AND SETTINGS

Cool Down Period

To ensure safe food storage, allow the refrigerator to operate with the doors closed for at least 8 hours before loading it with food.

NOTE When first turning the refrigerator on, adjust the control to Recommended. After 24 hours, adjust the controls as needed.

Freezer Control

All Models

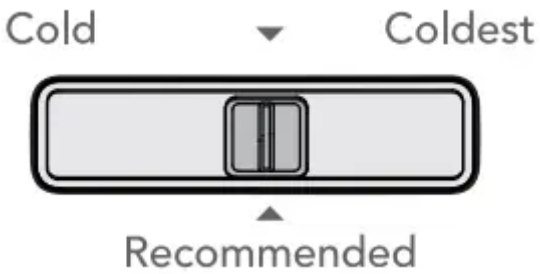

NOTE If your unit is in a garage or area where the temperature is below 50° F, adjust the freezer control to the coldest setting to improve performance.

Refrigerator Controls

Frigidaire

IMPORTANT Adjusting the refrigerator temperature control to **OFF** turns off the compressor and prevents the refrigerator from cooling, but does not disconnect the power to the light bulb and other electrical components. To turn off power to your refrigerator, you must unplug the power cord from the wall outlet.

Temperature Adjustment

Adjust the temperature gradually: adjust the knob in small increments, allowing the temperature to stabilize.

- For colder temperatures, adjust the control toward Coldest.
- For warmer temperatures, adjust the control toward Cold.

Adjusting the refrigerator control will change temperatures in both compartments. The freezer control can be left at the factory preset (*Recommended) or adjusted as desired.

To maintain temperature, a fan circulates air in the refrigerator and freezer compartments. For good circulation, do not block cold air vents with food items.

Gallery and Professional

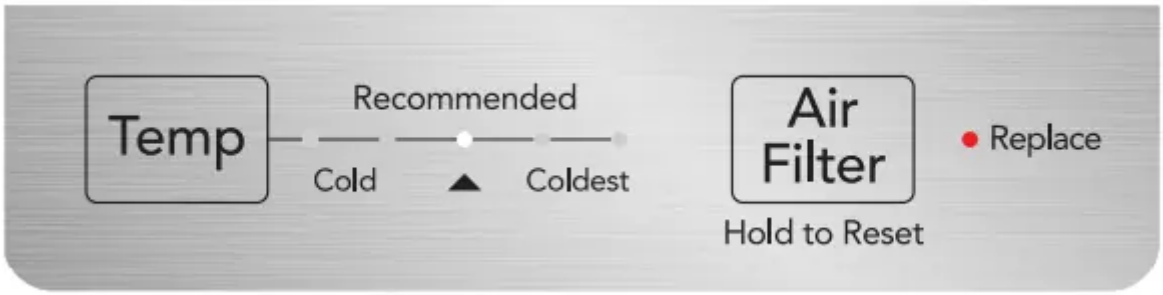

Temperature Adjustment

Adjust the temperature gradually: adjust in small increments, allowing the temperature to stabilize.

- For colder temperatures, press the Temp button to change the temperature setting toward Coldest.
- For warmer temperatures, press the Temp button to change the temperature setting toward Cold.

NOTE

Pressing the Temp button will scroll through the 5 temperature settings toward the coldest setting, and then loop back to the least coldest setting.

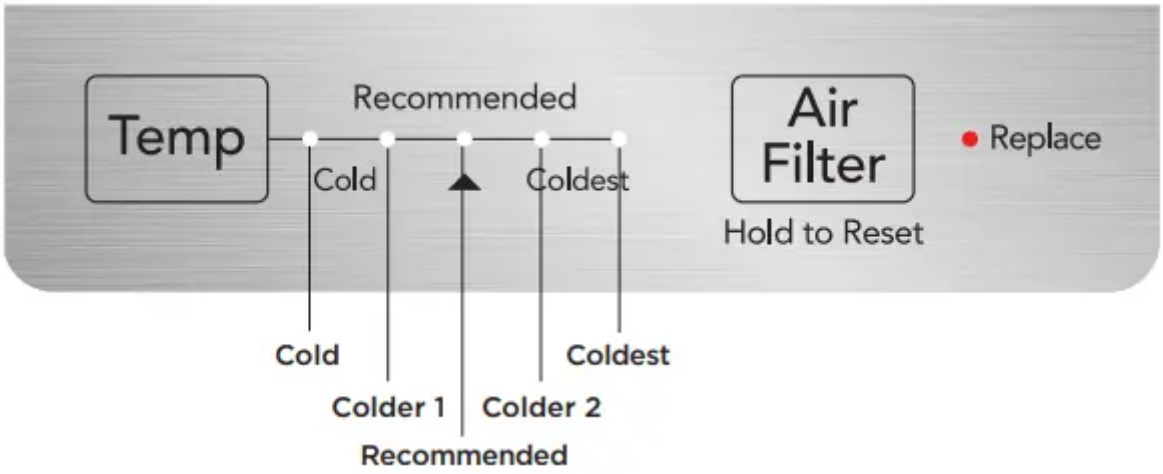

Adjusting the refrigerator control will change temperature in both compartments. The freezer control can be left at the factory preset (*Recommended) or adjusted as desired.

To maintain temperatures, a fan circulates air in the refrigerator and freezer compartments. For good circulation, do not block cold air vents with food items.

Air Filter

The filter status light on the control panel will prompt you to replace the filter after 6 months. After replacing the air filter, the air filter status on the control panel should be reset. To reset, Press and hold for 3 seconds.

Door Alarm

If the door is left open for 5 or more minutes, the door alarm will sound. Clear the alarm by closing the door or by pressing any button.

Sabbath Mode (Frigidaire Gallery/Professional)

The Sabbath Mode is a feature that disables portions of the refrigerator and its controls in accordance with observance of the weekly Sabbath and religious holidays within the Orthodox Jewish community.

NOTE The temperature setting is not affected by the Sabbath Mode.

To enter Sabbath Mode

1. Press and hold the Temp and Air Filter buttons for 5 seconds.

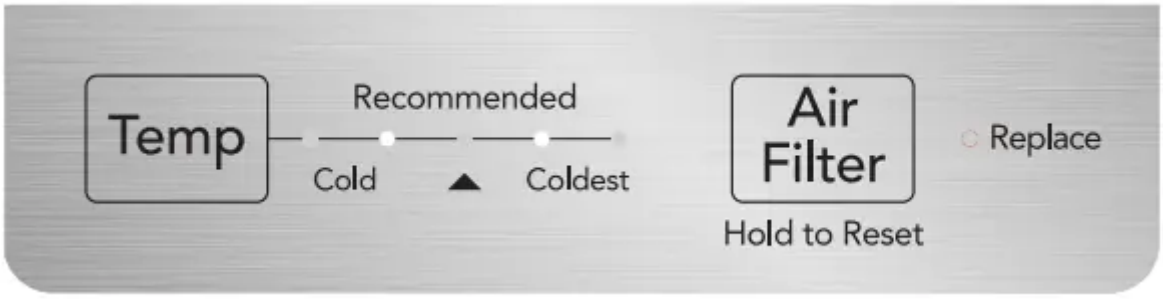

One LED on each side of Recommended setting will be lit while the unit is in Sabbath mode.

2. Press the ice maker’s On/Off power switch to turn the ice maker off. The LED will not be illuminated.

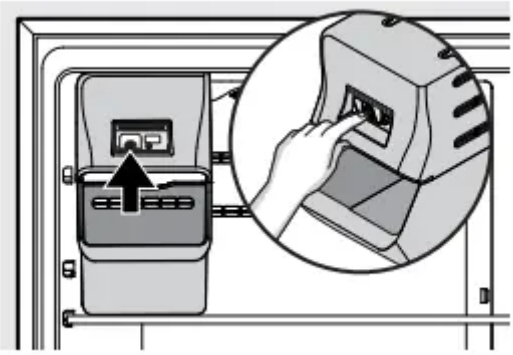

NOTE Although you have entered the Sabbath Mode, the ice maker will complete the cycle it had already initiated. The ice cube compartment will remain cold and you can make new ice cubes with standard trays.

To exit Sabbath Mode, reverse the steps above.

NOTE

While in Sabbath Mode, neither the lights not the control panel will work until Sabbath Mode is deactivated.

The refrigerator stays in Sabbath Mode after power failure recovery. Deactivate It with the buttons on the control panel

For further assistance, guidelines for proper use and a complete list of models with the Sabbath feature, please visit star-k.org.

STORAGE FEATURES

Door Storage

Door bins, shelves, and racks conveniently store jars, bottles, and cans. You can quickly select frequently used items.

Door Bin

Door bins can accommodate gallon-sized plastic drink containers and economy-sized jars and containers.

To remove the door bin:

1. Lift up on the bin
2. Pull it straight out.

To install the door bin:

1. Push the bin back and down into the locking tabs.
2. The bin sides will lock into the tabs.

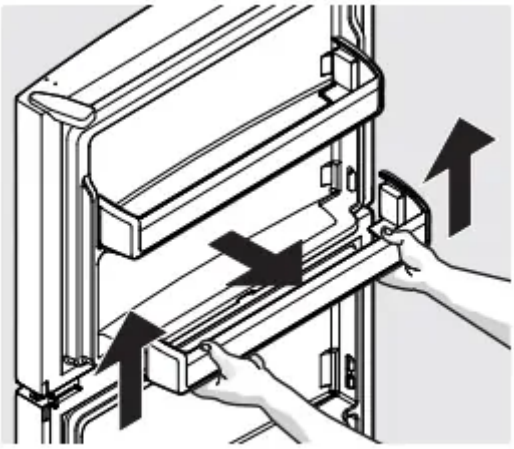

Door Bin

Shelf Adjustment

The shelves are easy to adjust to suit individual needs. Before adjusting the shelves, remove all food.

To adjust shelves, slide the shelf by moving it forward and lifting it upward.

To replace shelves, insert the rear of the shelf into any pair of shelf rails and carefully push the shelf back into position, making sure the shelf clips (A) go in the notch in the liner.

Glass Shelf

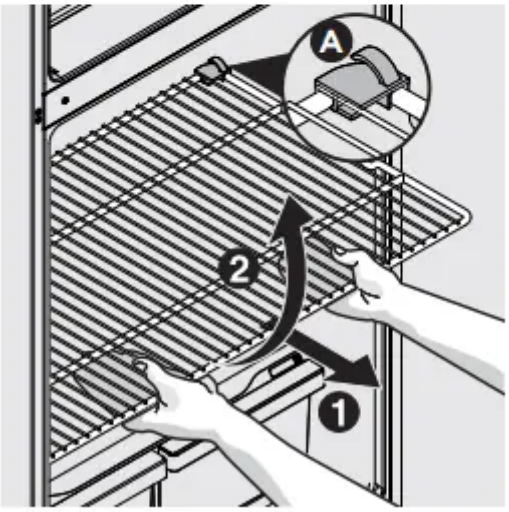

Wire Shelf

CAUTION When reinstalling the shelf, ensure the shelf clip is attached to the liner and holds it in place.

CAUTION Do not clean glass shelves or covers with warm water when they are cold. Shelves and covers may break if exposed to sudden temperature changes or impact, such as bumping. Tempered glass is designed to shatter into many small, pebble-size pieces. This is normal. Glass shelves and covers are heavy. Use both hands when removing them to avoid dropping.

CAUTION To avoid personal injury or property damage, handle tempered glass shelves carefully. Shelves may break suddenly if nicked, scratched, or exposed to sudden temperature change.

Deli Drawer (some models)

IMPORTANT

Using the Deli Drawer to store fruits and vegetables may result in frozen produce. The Deli Drawer is designed to stay colder than the Crisper Drawers and should only be used to store lucheon meets, spreads, cheeses, and other deli items.

Store vegetables and/or fruit in the Crisper Drawers.

NOTE

Please be sure to support the glass when removing the drawer.

Store deli meats or spreads in the Half- or Full-Width Sliding Deli Drawer found in the middle section of your appliance.

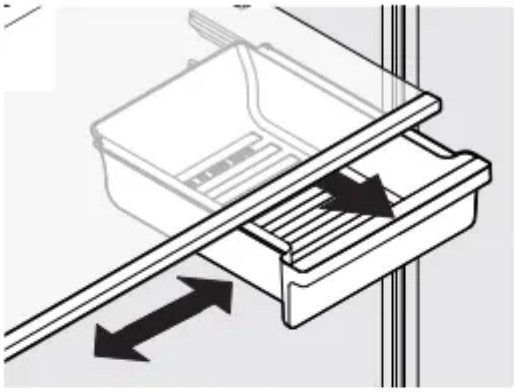

Half-Width Sliding Deli Drawer

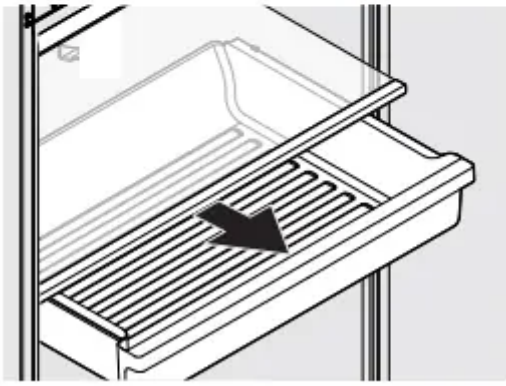

Full-Width Sliding Deli Drawer

IMPORTANT Store vegetables and/or fruit in the Crisper Drawers.

Crisper Humidity Control (some models)

The crisper humidity control, present on the crisper drawers of some models, allows you to adjust the humidity within the crisper. This can extend the life of fresh vegetables that keep best in high humidity

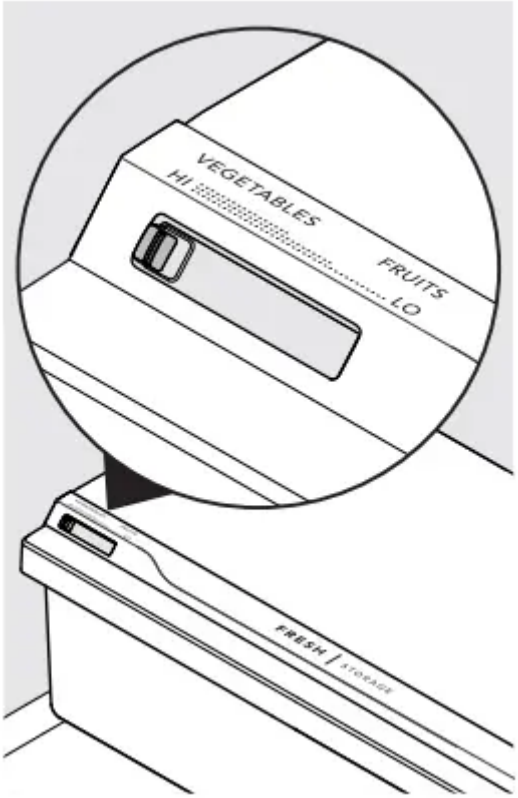

NOTE

Leafy vegetables keep best when stored with the Humidity Control set on High Humidity, or in a drawer without a Humidity Control. This keeps incoming air to a minimum and maintains maximum moisture content. Store non-leafy vegetables and fruits still in their skins at the low humidity setting.

Auto-Humidity Control some models)

Some crispers have an auto-humidity control at the rear of each crisper under the humidity control cover.

To remove the auto humidity control for cleaning:

1. Reach to the back of the humidity control cover.
2. Pull up on the cover.
3. Pull the cover toward the back of the cabinet and remove.
4. Clean the humidity control with hot soapy water.
5. Replace the clean humidity control cover by reversing the steps above. Repeat for both crispers.

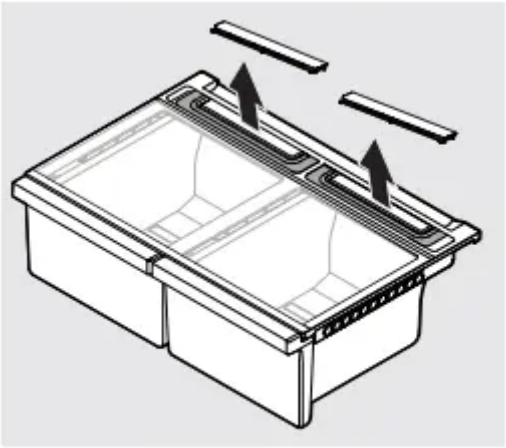

Remove the auto humidity cover

NOTE We do not recommend replacing the auto-humidity membrane unless it becomes damaged or ruined. If the membrane becomes soiled, it can be washed with soap and water. Ensure the membrane is dry before replacing it in the cover and back in the unit.

CARE AND CLEANING

Protecting your investment

Keeping your refrigerator clean maintains appearance and prevents odor build-up. Wipe up any spills immediately and clean the freezer and refrigerator compartments at least twice a year. When cleaning, take the following precautions:

- Never use CHLORIDE or cleaners with bleach to clean stainless steel.
- Do not wash any removable parts in a dishwasher.
- Always unplug the electrical power cord from the wall outlet before cleaning.
- Remove adhesive labels by hand. Do not use razor blades or other sharp instruments which can scratch the appliance surface.
- Do not remove the serial plate.

Do not use abrasive cleaners such as window sprays, scouring cleansers, brushes, flammable fluids, cleaning waxes, concentrated detergents, bleaches or cleansers containing petroleum products on plastic parts, interior doors, gaskets or cabinet liners. Do not use paper towels, metallic scouring pads, or other abrasive cleaning materials or strong alkaline solutions.

NOTE If you set your temperature controls to turn off cooling, power to lights and other electrical components will continue until you unplug the power cord from the wall outlet.

CAUTION Pull the refrigerator straight out to move it. Shifting it from side to side may damage flooring. Be careful not to move the refrigerator beyond the plumbing connections.

IMPORTANT If you store or move your refrigerator in freezing temperatures, be sure to completely drain the water supply system. Failure to do so could result in water leaks when

the refrigerator is put back into service. Contact a service representative to perform this operation.

Care and Cleaning Tips		
Part	**What To Use**	**Tips and Precautions**
Interior & Door Liners	• Soap and water • Baking soda and water	Use 2 tbsp of baking soda in 1 qt of warm water. Be sure to wring excess water out of sponge or cloth before cleaning around controls, light bulb or any electrical part.
Door Gaskets	• Soap and water	Wipe gaskets with a clean soft cloth.
Drawers & Bins	• Soap and water	Use a soft cloth to clean drawer runners and tracks.
Glass Shelves	• Soap and water • Glass cleaner • Mild liquid sprays	Allow glass to warm to room temperature before immersing in warm water.
Exterior & Handles	• Soap and water • Non Abrasive Glass Cleaner	Do not use commercial household cleaners containing ammonia, bleach or alcohol to clean handles. Use a soft cloth to clean smooth handles. DO NOT use a dry cloth to clean smooth doors.
Exterior & Handles (Stainless Steel Models Only)	• Soap and water • Stainless Steel Cleaners	Never use CHLORIDE or cleaners with bleach to clean stainless steel. Clean stainless steel front and handles with non-abrasive soapy water and a dishcloth. Rinse with clean water and a soft cloth. Use a non-abrasive stainless steel cleaner. These cleaners can be purchased at most home improvement or major department stores. Always follow manufacturer's instructions. Do not use household cleaners containing ammonia or bleach. **NOTE:** Always clean, wipe and dry with the grain to prevent scratching. Wash the rest of the cabinet with warm water and mild liquid detergent. Rinse well, and wipe dry with a clean soft cloth.

Air Filter	• Order Air Filter Housing Kit TMFRGPAAF1KT, which includes a pure**Air™ AF-1** air filter at Frigidaire.com	Our fue**Air™ AF-1** air filter's active carbon technology absorbs and captures undesirable odors more effectively than baking soda.
Replacing Light Bulbs	• Unplug appliance • Wear gloves • Remove light cover • Replace old bulb • Replace light cover • Plug in the appliance	**CAUTION**: Wear gloves when replacing the AC LED light bulbs to avoid getting cut. Use same wattage when replacing bulb. **CAUTION:** Use only a 5-watt or less AC LED light bulb.

TROUBLESHOOTING

Let us help you troubleshoot your concern! This section will help you with common issues. If you need us, visit our website, chat with an agent, or call us. We may be able to help you avoid a service visit. If you do need service, we can get that started for you!

Common Occurences	
Refrigerator does not run.	• Ensure the plug is tightly pushed into an electrical outlet. • Check/replace the fuse with a 15-amp time-delay fuse. Reset the circuit breaker. • The refrigerator control is turned to OFF. • Refrigerator may be in defrost cycle. Wait 20 minutes and check again.
Freezer temperature is colder than preferred. Refrigerator temperature is satisfactory.	• Set the auxiliary freezer control to a warmer setting until the freezer temperature is satisfactory. Allow 24 hours for the temperature to stabilize.
Refrigerator temperature is too cold. Freezer temperature is satisfactory.	• Set the refrigerator control to a warmer setting. Allow 24 hours for the temperature to stabilize. Then check the freezer temperature and adjust as needed.
Freezer temperature is warmer than preferred. Refrigerator temperature is satisfactory.	• Set the auxiliary freezer control to a colder setting until the freezer temperature is satisfactory. Allow 24 hours for the temperature to stabilize.
Refrigerator temperature is too warm. Freezer temperature is satisfactory.	• Set the refrigerator control to a colder setting. Allow 24 hours for temperature to stabilize. Then check refrigerator temperature and adjust as needed.
Refrigerator is noisy or vibrates.	• The cabinet is not level. • Floor is weak. • See the **NORMAL OPERATING SOUNDS** section.
Odors in the refrigerator.	• The interior needs to be cleaned. • Foods that produce odors should be covered or wrapped.

Cabinet light is not working.	• Replace with only a 5-watt or less AC LED light bulb. • Ensure the plug is tightly pushed into an electrical outlet. • The light switch may be stuck. Push in the light switch, located on the refrigerator side wall, to release.
Automatic ice maker is not working (some models)	• Ensure the ice maker is on (green light). • The ice maker should produce 2 to 2.5 pounds of ice in a 24 hour period. • Ensure the water supply is turned on. • The water pressure may be too low. • The freezer may not be cold enough.
Ice Maker is not making enough ice (some models)	• Set the freezer control to a colder setting to improve the performance of the ice maker. Allow 24 hours for the temperature to stabilize.

Warning

This content is compiled from multiple sources and is provided for reference purposes only. It may not be complete or fully applicable to all situations. If you are unable to resolve your issue, please contact the product manufacturer or an authorized service provider for official support.

Document generated by ManualsFile