CONTROLS AND STARTING A WASH

To start a wash programme

1. Press ⏻ to turn the dishwasher on.
2. Check that the wash programme displayed is the one you would like to use. If not, press » to scroll through the wash programmes (see section ‘Changing the wash programme’ below).
3. Once the display shows the programme you would like to use, press ▶II to start. The display will show the approximate time remaining and the stage of the wash.

Note:

- the default cycle when you first turn the dishwasher on is Normal
- the dishwasher will remember the last programme used.

To pause and restart a wash programme

1. Press ▶II to pause the programme. The programme status (eg Wash) will flash while the dishwasher is paused.
2. Open the door very slowly.

IMPORTANT: There is a risk of being sprayed with hot water. Do not fully open the door until the spray arms have stopped rotating.

1. Load, remove, or rearrange any dishes if needed.
2. Press ▶II to restart the programme. If the dishwasher is not restarted within 7 minutes, it will then beep until the cycle is restarted.

Changing the wash programme

Note: The dishwasher will remember the last programme used.

1. Press ⏻ to turn the dishwasher on.

2. Press Program to scroll to the desired wash programme.

- The display will show the wash programme time.

1. Select a wash modifier (optional, DW60C6 models only)

- Press * to scroll between the wash modifier options. The selected wash modifier indicator will be lit. (see ‘Selecting wash modifiers’).

1. Press ▶II to start the wash programme.

   At the end of the programme the dishwasher will beep. The display will show **0**. After 30 seconds the display will turn off.

SETTING DELAY START

This feature can delay the start of a wash programme by 1 to 12 hours.

1. Load the dishes, add detergent and close the door.
2. Press ⏻ to turn the dishwasher on.
3. Check that the display shows the wash programme you require. If not, see instructions for ‘Changing the wash programme’.

1. C1/C2/C4 models: Press ⏲.

   C6 models: Press and hold ⏲ for a second.

- The delay start indicator ⏲ will light up and the display will show the delay time (hours).

1. Press again for a second to increase the number of hours you wish to delay the wash by (1hr - 12hr in hour steps).

Note:

- Hold down to scroll more quickly to your desired delay time.
- Scrolling past 12 hours will exit delay start.

1. Delay start is now set. The display will countdown in hours. The wash programme will automatically start when the delay time is over.

To cancel Delay start, press . Press to exit delay start and cancel the delay time.

SETTING WASH MODIFIERS (DW60FC6 MODELS ONLY)

Along with setting the wash programme, you may select one of the following the additional options:

- **Extra dry:** Increases the wash temperature and the length of the drying phase for improved drying performance. This is especially useful for plastic items.
- **Quick:** Uses additional water and energy for a faster wash time, while maintaining wash performance.
- **Sanitize:** Raises the water temperature during the rinse phase to sanitize dishes. Ideal for washing items such as baby bottles and preserving jars.

To set a wash modifier

1. Make sure the dishwasher is on and detergent (and rinse aid if necessary) has been added.
2. Press » to select a wash programme.
3. Press * to scroll through the wash modifier options.

- The selected wash modifier indicator will light up on the display.
- Press ▶II to start the wash

Note:

- Only one modifier can be set at a time
- Not all modifiers are available for every wash programme. If a wash modifier is not available for the chosen wash program, then that modifier cannot be selected.

WASH PROGRAMME	MODIFIER AVAILABLE		
Auto	-	-	-
Heavy	Extra Dry	Quick	Sanitize
Normal	Extra Dry	Quick	Sanitize
Normal Eco	-	-	-
Fast	Extra Dry	-	Sanitize
Delicate	Extra Dry	Quick	-
Rinse	-	-	-

Using sanitize

The sanitize wash modifier adjusts the wash programme to meet the conditions required by Section 6, NSF 184 for sanitization to occur.

While sanitize is running, the wash programme is monitored to ensure that these conditions are met.

IMPORTANT!

- **For sanitization to occur, the temperature of the water needs to reach 700C. Check that all items in the dishwasher are dishwasher safe before running the sanitize modifier.**
- **If the wash is interrupted or the water supply is turned off during the cycle, then the heating conditions for sanitization may not be met. You may need to run the cycle again to ensure sanitization of your dishes.**
- **Only cycles utilising the sanitize wash modifier are designed to meet the conditions required by Section 6, NSF 184. Other wash programs may not reach the temperatures required for sanitization to occur. See table on previous page for wash programs that have sanitize available.**

At the end of a wash programme with sanitize, always check the display to make sure that sanitization has been successful.

If sanitization has been successful:

- The dishwasher will beep
- **0** will show in the display
- The sanitize indicator will remain lit.
- After 30 seconds the display will turn off.

If sanitization has not been successful:

- An alert will sound
- An alert code will show in the display
- The sanitize indicator will not be lit.

SETTING A 1/2 LOAD (DW60FC6 MODELS ONLY)

Half load Option

- If you don't have a full load of dishes to wash, you can choose to use the 1/2 load option. This may be useful if, for example, you only wish to wash the breakfast dishes. The dishes should fill only half the dishwasher, but may be placed in both upper and lower baskets.
- This option is available with the following wash programmes and modifiers:

WASH PROGRAMME	MODIFIER AVAILABLE WITH 1/2 LOAD
Heavy	Extra Dry, Sanitize
Normal	Extra Dry, Sanitize
Normal Eco	-
Delicate	Extra Dry

To select 1/2 load

1. Press ⏻ to turn the dishwasher on.
2. Press » to select a wash programme, and * to select a wash modifier (if required).
3. Press and hold ⏻ for a second until you hear a beep. The half load indicator will light up.

To cancel 1/2 load

1. Press and hold ⏻ for a second until you hear a beep.

- The half load indicator will go out.

  Note: 1/2 load cannot be cancelled while a wash programme is running.

USER PREFERENCE SETTINGS

These allow you to:

- Change the rinse aid setting or turn rinse aid on or off.
- Turn the beeps on or off.

To change the rinse aid setting

1. Press ⏻ to turn the dishwasher on.
2. Press and hold ≫ and ▶II together for five seconds to enter the user preference menu. The display will show the current Rinse Aid setting.

1. Press ≫ to scroll between rA1 (minimum dispense) to rA6 (maximum dispense) or rA- (rinse aid off).

1. Press ▶II to move on to the next setting or press ⏻ to exit the user preference menu.

To turn the Beeps on or off

This turns off all sounds on the dishwasher (except for fault alerts).

1. Make sure the dishwasher is on.
2. Press and hold ≫ and ▶II together for five seconds to enter the user preference menu. The display will show the current Rinse Aid setting.
3. Press ▶II to scroll to the Beeps menu.

1. Press ≫ to toggle between bPo (Beeps On) and bP- (Beeps Off)
2. Press ⏻ to exit the user preference menu.

CARING FOR YOUR DINNERWARE

The combination of high temperatures and dishwasher detergent may cause damage to some items if they are washed in the dishwasher. Remember, if in any doubt about any aspect concerning items washed in the dishwasher, follow the instructions from the manufacturer of the items, or wash the item by hand.

IMPORTANT: Never put highly absorbent materials, such as sponges and towels in your dishwasher. Do not put dishes or cutlery that have been soiled by tobacco ash, wax, lubricating grease or paint in your dishwasher.

Cutlery and silverware

All cutlery and silverware should be rinsed immediately after use to prevent tarnishing caused by some foods. Silver items should not come into contact with stainless steel, e.g.

other cutlery. Mixing these items can cause staining. Remove silver cutlery from the dishwasher and hand dry immediately after the programme has finished.

Aluminium

Aluminium can be dulled by dishwasher detergent. The degree of change depends on the quality of the item.

Other metals

Iron and cast iron objects can rust and stain other items. Copper, pewter and brass tend to stain. Wash these items by hand.

Woodware

Wooden items are generally sensitive to heat and water. Regular use in the dishwasher may cause deterioration over time. If in doubt, wash by hand.

Glassware

Most everyday glassware is dishwasher safe. Crystal, very fine and antique glassware may etch that is, become opaque. You may prefer to wash these items by hand.

Plastic

Some plastic may change shape or colour with hot water. Check the manufacturer's instructions about washing plastic items. Washable plastic items should be weighted down so they do not flip over and fill with water or fall through the basket during the wash.

Decorated items

Most modern china patterns are dishwasher safe. Antique items, those with a pattern painted over the glaze, gold rims or hand-painted china may be more sensitive to machine washing. If in doubt, wash by hand.

Glued items

Certain adhesives are softened or dissolved in machine washing. If in doubt, wash by hand.

LOADING ADVICE

When loading your dishwasher

- Place items so that water coming from the rotating spray arms below can reach all areas. Especially items on the foldaway cup racks. Wash performance will be reduced if it can't.
- Ensure glass and other fragile items are stable, so that they do not accidentally topple and break during the wash.
- Any flimsy or light plastic items should be either weighted down or placed on the cup racks or in the cutlery tray.
- Ensure there are no dishware items that will stop the spray arms from rotating.

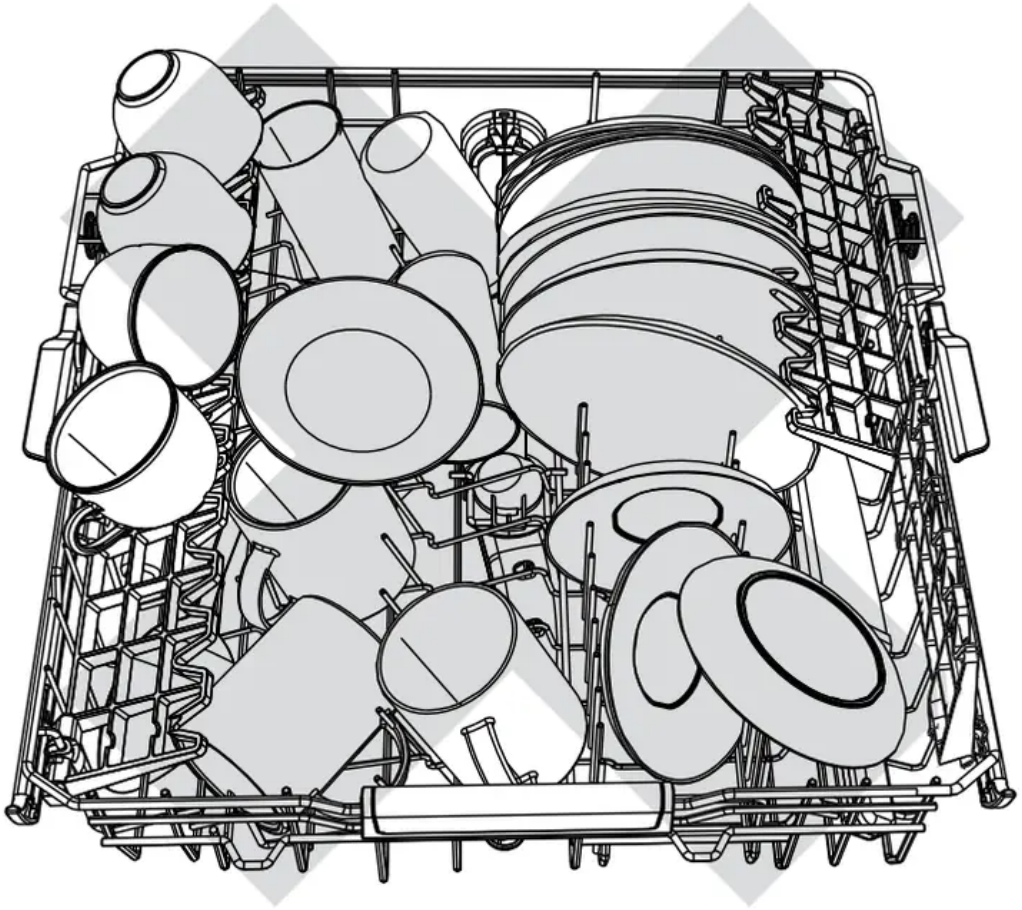

• Overcrowded and wash water will not reach some of the dinnerware.

• Cups, glasses and bowls must have their openings facing down.

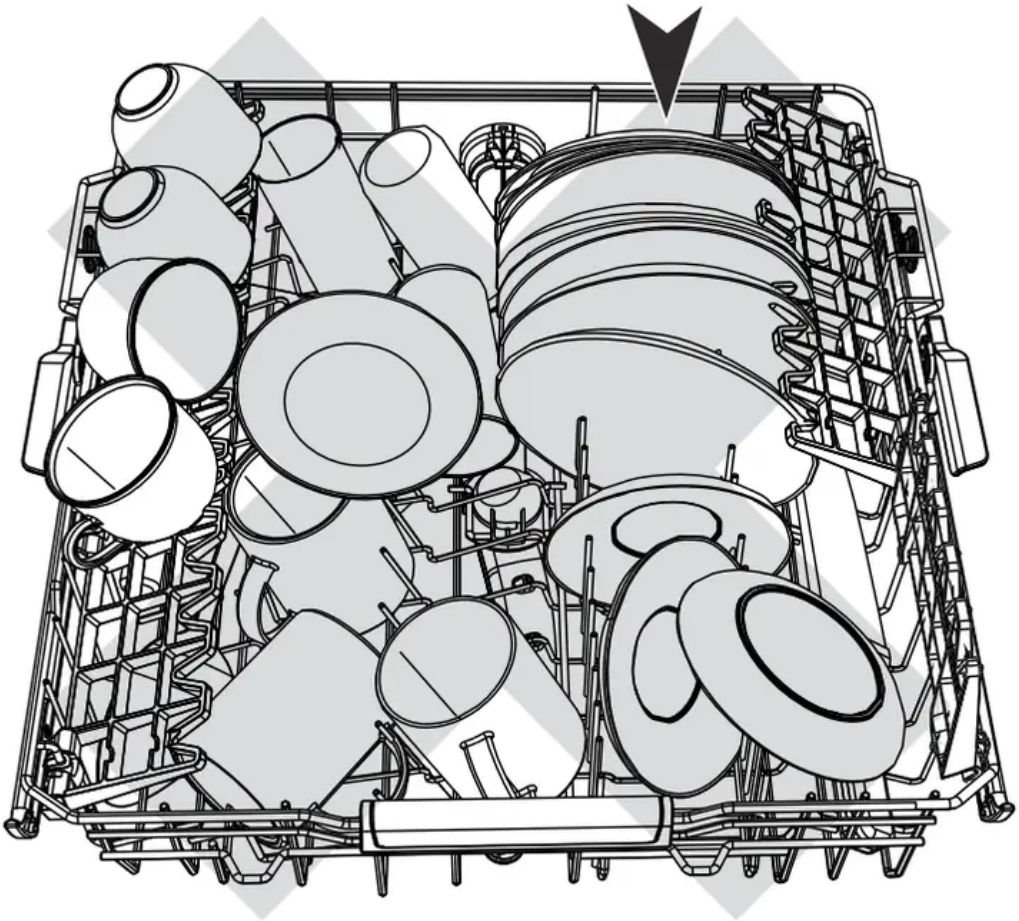

- The plates are nesting together and wash water may not get through.
- Ensure cutlery and utensils are not nesting or stuck together. They need to be evenly spread out.

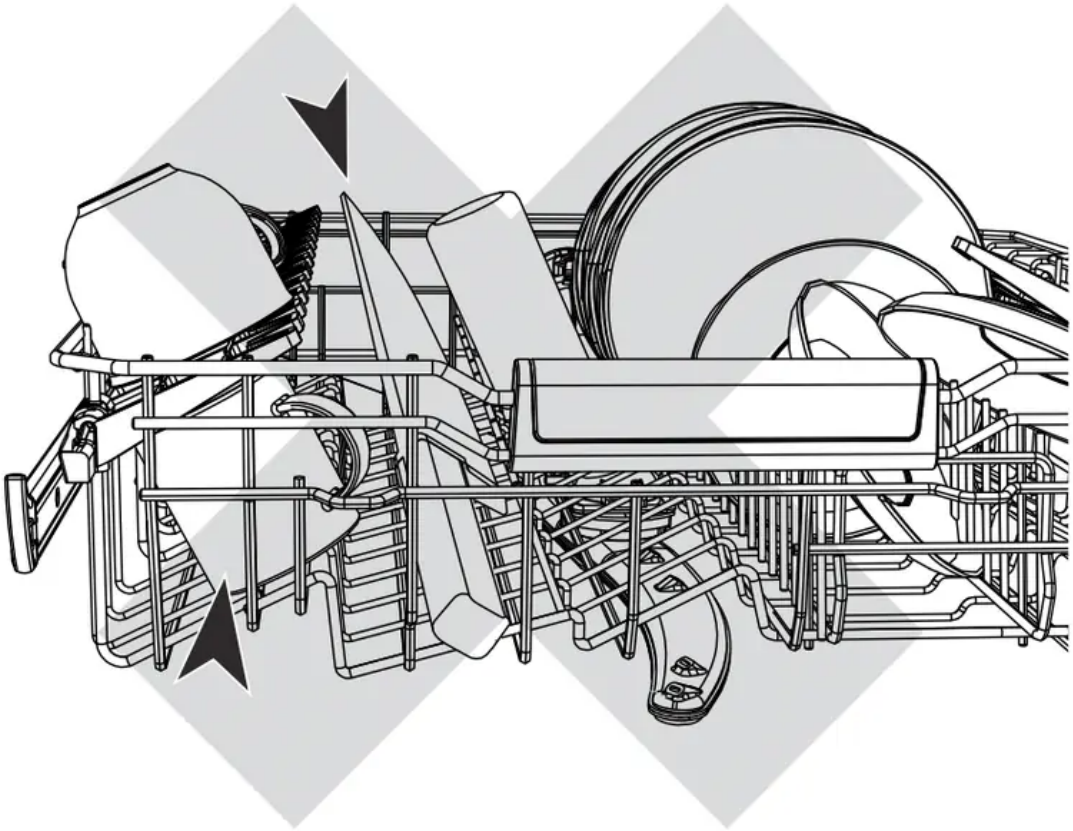

- The large mug below is blocking wash water reaching the mug on the cup rack.
- Locate sharp items safely to prevent injuring the user and damaging the lid assembly.
- Sharp or pointed items must be placed horizontally or with sharp edges/points facing down to avoid risk of injury.

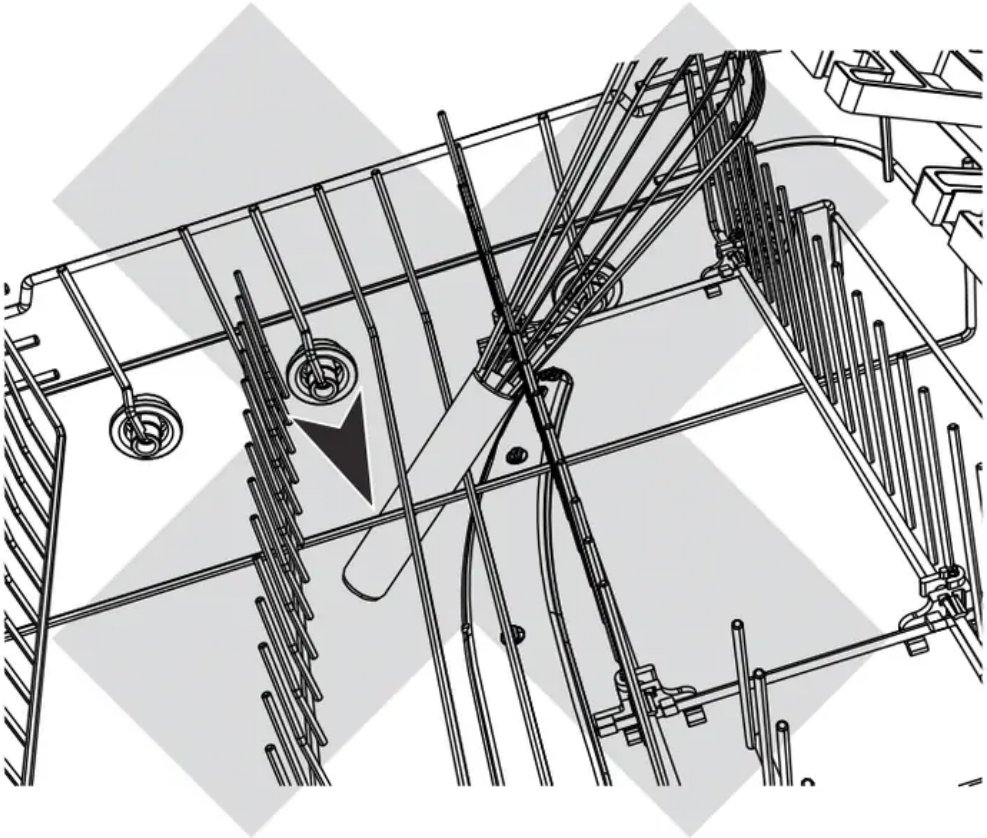

- Ensure cutlery has not fallen through the base rack and stopped the spray arms from rotating.
- Large utensils should be placed on the foldaway cup racks so they do not become dislodged and stop the spray arms from rotating.
- Check the bottom of the cutlery basket to ensure sharp or pointed items have not come through as they may stop spray arm rotation.

WATER HARDNESS AND DISHWASHING

What is water hardness?

Hard water is water with a high concentration of minerals such as calcium and magnesium. In soft water, this concentration is low. Water hardness varies by geographical location.

How does water hardness affect dishwashing?

- Hard water can be detrimental to the performance of your dishwasher. Over time, glassware washed in hard water will become opaque and dishes will become spotted or covered in a white film. Using very hard water can cause dishwasher parts to fail over time.

- Naturally soft or softened water has no detrimental effects if used with the correct amount of detergent. However, excess detergent combined with hot, soft water may cause irreversible etching on glassware. Etching first appears as a rainbow-coloured film and—if allowed to continue—can make glassware permanently opaque.

What can I do to minimise any detrimental effects?

Contact your local water company to find out about water hardness in your area.

If your home has hard water …

- Increase the amount of detergent used.
- Use a detergent with high phosphate content. Phosphate softens the water and this improves wash results. You could also try using multi-purpose tablets.
- Use rinse aid. We recommend you turn the rinse aid on and to at least setting 5 to help improve wash performance.
- Use a dishwasher cleaner/descaler regularly, or whenever you notice a build-up of limescale deposits in your dishwasher.

IMPORTANT: We recommend fitting a water softener to the household water supply. If the water hardness in your home is above 250 ppm/14.6 gpg, a water softener has to be fitted to maintain the performance of your dishwasher.

If your home has naturally soft water or a water softener fitted

- Avoid using too much detergent. Follow the quantity recommendations on the following page.
- Ensure the dishwasher is not overloaded and water can reach all the dishes.

WASH PROGRAMMES AND DETERGENT QUANTITIES

- The quantities in the table below are for powdered detergent and typical levels of soiling. If your home has softer or harder water, or to suit the particular load, you may need to adjust these quantities.
- If you are using tablets, follow the tablet manufacturer’s recommendations.
- The indicator light will show which option has been selected.

PROGRAMME	RECOMMENDED LOAD	QUANTITY OF POWDERED DETERGENT FOR EACH COMPARTMENT (grams)	
		Main Wash	Pre-Wash
Auto	Any type of load. The dishwasher automatically selects the optimum wash programme	**20-35 g depending on soils**	**none**
Heavy	Heavily soiled pots, pans, baking dishes	**35 g**	**5 g**
Normal	Dishes with normal soils for optimum wash and dry performance	**35 g**	**5 g**
Normal Eco	Normally soiled dishes for optimum energy and water usage	**27.5 - 28.75 g**	**5 g**
Fast	Very lightly soiled mixed dishes	**20 g**	**none**
Delicate (some models only)	Lightly soiled delicate (e.g. heat-sensitive) items	**20 g**	**none**
Rinse	Prevents odours and soils drying on dishes before they are washed	**none**	**none**

ADDING DETERGENT

IMPORTANT!

- **Only use detergents recommended for automatic dishwashers.**
- **Dishwasher detergents are strongly alkaline. They can be extremely dangerous if swallowed. Avoid contact with the skin and eyes and keep children and infirm persons away from the dishwasher when it is open. Check that the detergent dispenser is empty after completion of each wash programme.**
- **Never sprinkle or pour detergent directly onto any item in the dishwasher. Detergent and dishwasher tablets should not be in direct contact with dishes or cutlery.**
- **Do not use hand washing liquids, soap, laundry detergents or disinfectants, as these will damage the dishwasher.**

Filling the detergent dispenser

1. Press the button on the right of the dispenser.

IMPORTANT: Approach the dispenser from the right-hand side to prevent the cover from snapping open on your hand.

1. Add detergent into the appropriate compartment(s). If you are using powdered detergent, see the recommended quantities on the previous page. The ‘20’ and ‘30’ markings in the main wash compartment correspond to grams of powdered detergent.

   IMPORTANT: Tablets should only be placed in the main wash (larger) compartment.

1. Remove any excess detergent from the edges of the dispenser.
2. Close the cover and press down until it clicks shut. The detergent will automatically be released into the dishwasher during the wash programme.

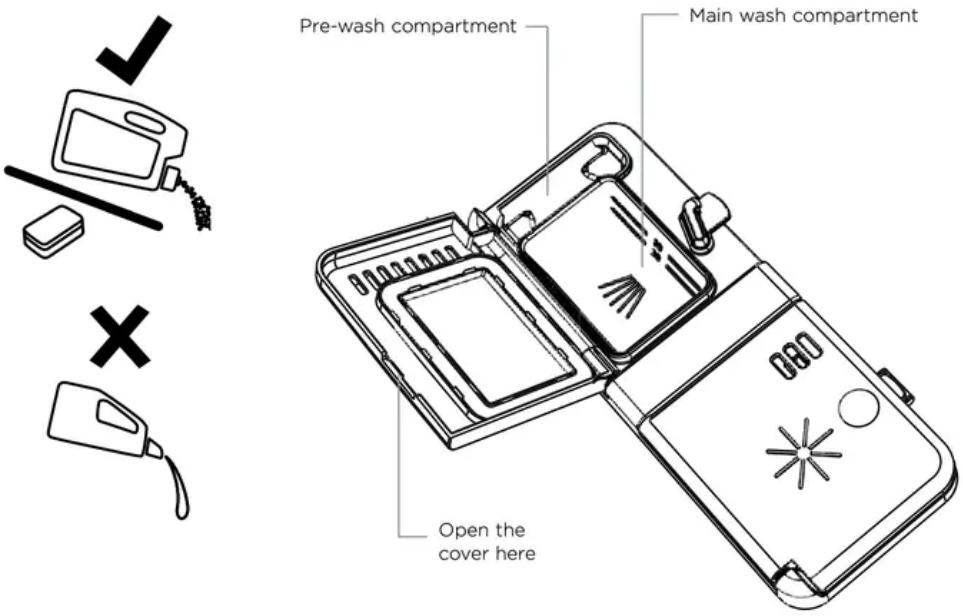

USING RINSE AID

We highly recommend using liquid rinse aid regularly to get the best drying results. Rinse aid gives a streak-free, sparkling clean look to glass and chinaware. In addition, it prevents metal from tarnishing.

When to refill the rinse aid dispenser

When rinse aid level becomes low, the rinse aid indicator on the control panel will light up to remind you to refill the dispenser.

When you have the dishwasher door open you can also check the rinse aid level using the indicators on the dispenser inside the dishwasher.

Adjusting the rinse aid dosage

The normal, factory-set dosage level is 5, but you may need to adjust this to suit your water conditions.

- If there is excessive foaming at the end of the wash, reduce the dosage.
- If you live in a hard water area or if dishes are wet or streaky after drying, increase the dosage.
- To adjust the rinse aid setting: see ‘User preference settings’ for how to do this.
- If you are using tablets with built-in rinse aid, we recommend setting the rinse aid dosage level to off (rA-).

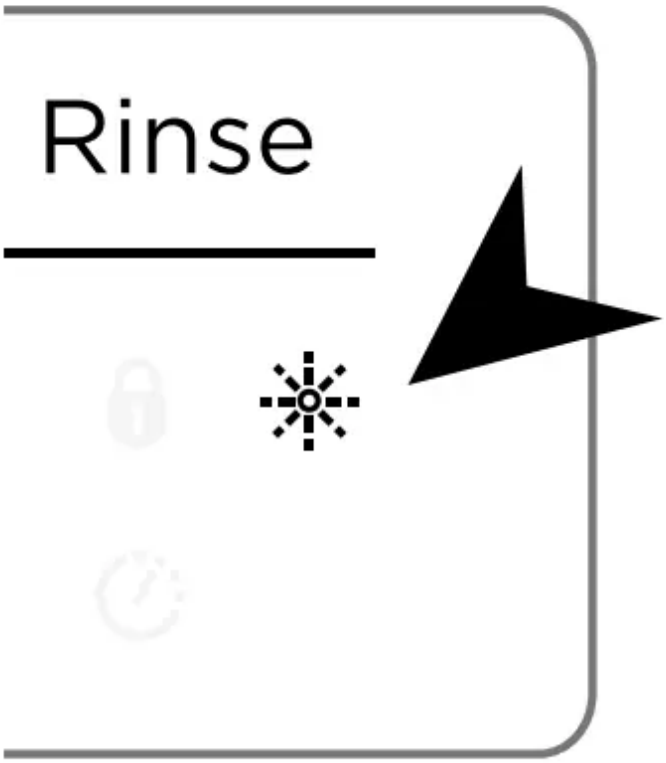

Rinse aid indicator
(on control panel)

How to refill the rinse aid dispenser

1. Press the button to snap the dispenser cover open.
2. Pour rinse aid into the circular opening, making sure not to fill beyond the MAX marking.

   IMPORTANT: Take care not to spill rinse aid into the dishwasher. Any spills must be wiped up to prevent excess foaming. Failure to do so may result in a service call, which will not be covered by warranty.

1. Close the cover, making sure it clicks shut.

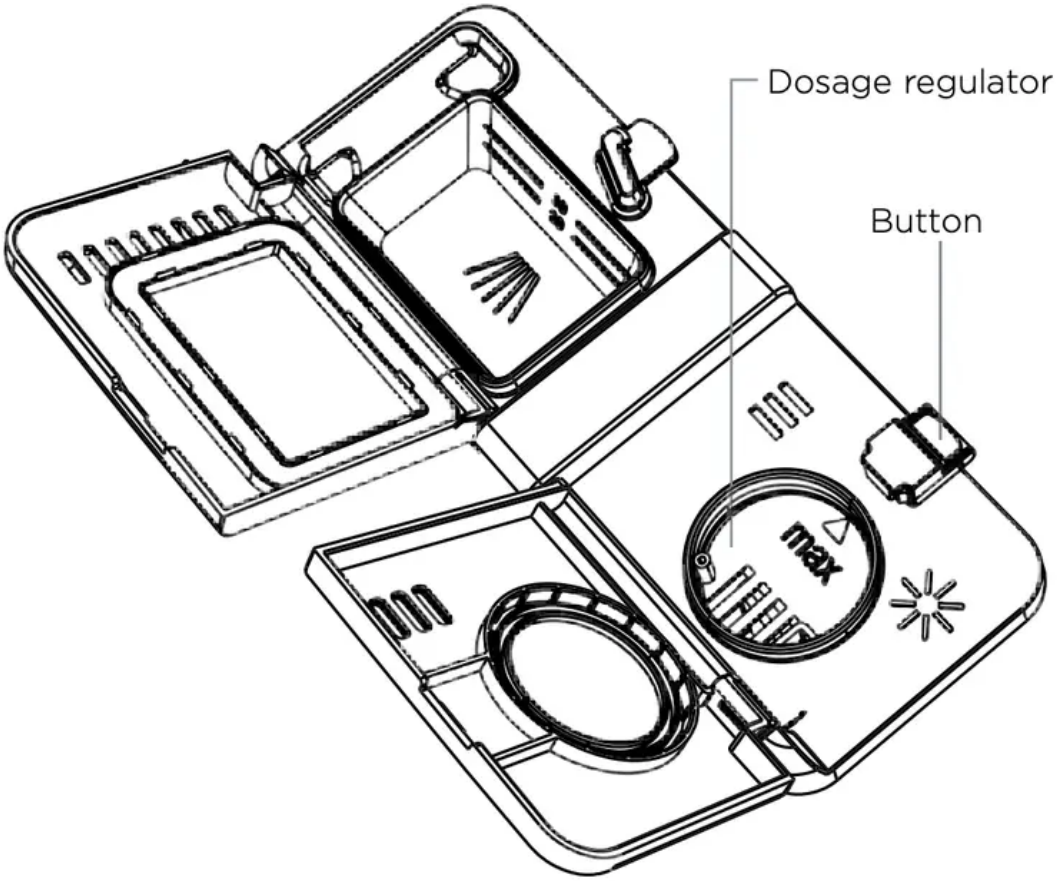

AFTER THE WASH

When the wash programme is over, the dishwasher will beep six times, then automatically turn off in a few seconds.

1. Open the door slightly and leave it ajar (about 100mm) to help the drying process.
2. Once the dishes are cool to touch, they can be removed.

IMPORTANT: Never leave the dishwasher door in the fully open position, as this could present a tripping hazard.

1. Check that the detergent dispenser is completely empty. If it isn't, wipe out with a damp cloth.
2. Inspect your dishwasher regularly to see if it needs any cleaning or maintenance:

- Check that no grease or limescale deposits have accumulated on the inside.
- If there are food particles in the filters, these need to be cleaned as well.
- See section 'Care and cleaning' for cleaning and maintenance instructions.

Holiday time

If the dishwasher is not going to be used for some time:

- Ensure the baskets are empty.
- Leave the inside of the dishwasher clean.
- Leave the dishwasher door ajar to allow air to circulate.
- Turn off both the power and water supply to the dishwasher.

CARE AND CLEANING

Over time, food residue or limescale deposits may accumulate inside your dishwasher. These may reduce efficiency, and food residue may produce a bad odour. Inspect and clean your dishwasher regularly

IMPORTANT !

- Before any cleaning or maintenance, always disconnect the dishwasher from the power supply, turn off the water supply, and wait until all parts of the dishwasher have cooled.
- Do not use the following cleaning aids, as they may damage the surfaces:
    - plastic or stainless steel scouring pads
    - abrasive, solvent, household cleaners
    - acid or alkaline cleaners
    - laundry detergents or disinfectants
    - stainless steel cleaners or polishes
    - hand-washing liquids or soap
- Where there is broken crockery or glass in the dishwasher, it must be carefully removed to prevent personal injury or damage to the appliance.
- After cleaning, always check that the spray arms and filters are all correctly in place.

Cleaning the dishwasher exterior

- To clean exterior surfaces of the dishwasher, wipe with a clean, soft damp cloth and dry with a clean, lint-free cloth.
- For non-flush surfaces wipe along or around the surface. For example, to wipe down the exterior control buttons, use a circular wiping motion around the button.
- Take care not to cause excessive wetting of the control panel area. Note: before cleaning the control panel, it is useful to disable the buttons by activating Keylock.

Cleaning the door seal and dishwasher interior

Clean thoroughly with warm water on a soft, lint-free cloth. If the interior is heavily soiled, use a dishwasher cleaner/descaler following the manufacturer’s instructions.

Cleaning the filters

The filters prevent larger food particles in the wash water from reaching the pump. These particles may occasionally block the filters. We recommend cleaning the filters whenever there is evidence of food particles.

- To remove the drain filter, turn the filter anti-clockwise to release, then lift out.
- Once the drain filter has been removed you can lift the filter plate out.
- Rinse them thoroughly under running water and then replace.

IMPORTANT: When cleaning the underside of the filter plate, take care handling its sharp outer edge.

- Replace the filters correctly after cleaning, making sure the filter plate is flush with the dishwasher base.

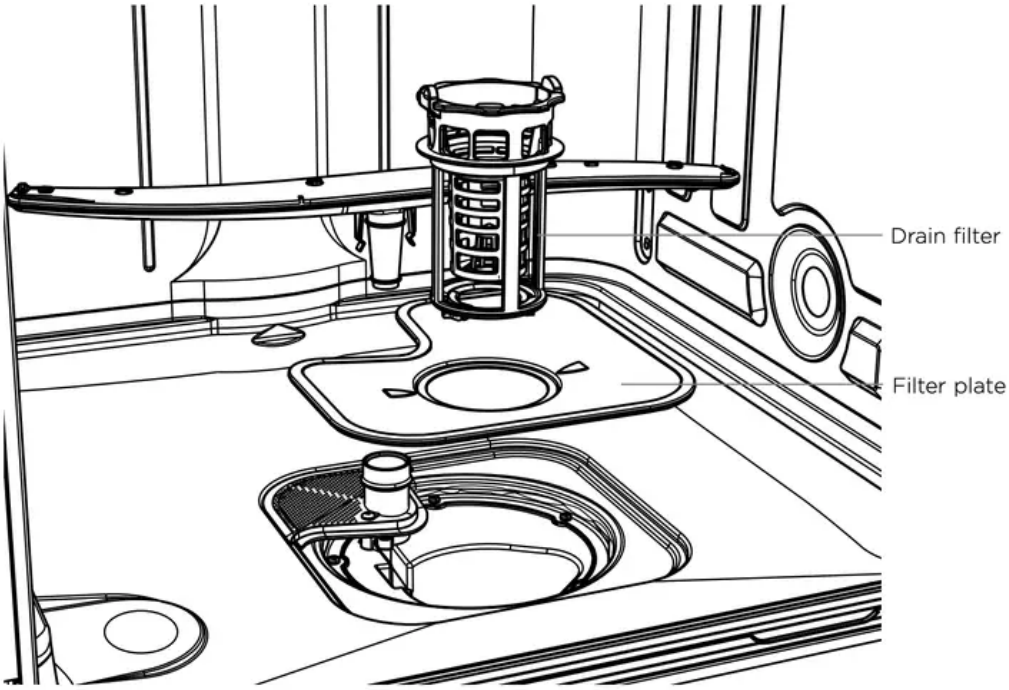

Cleaning the spray arms

Limescale and food particles in the wash water can block the holes in the spray arms and the arm mountings. Clean these parts about once a month, or more often should the need arise.

Cleaning the upper spray arm/head

Do not remove the upper spray arm for cleaning. Clean with a small plastic-bristled brush, or if heavily soiled or blocked use a dishwasher cleaner/descaler following the manufacturer’s instructions.

Cleaning the centre spray arm

- To remove the centre spray arm, carefully unscrew its locking nut.
- Rinse the spray arm thoroughly under running water, then refit.

IMPORTANT: Make sure you twist the locking nut on the centre spray arm firmly back on the water supply tube. Check that the centre spray arm is firmly locked in place and rotates freely.

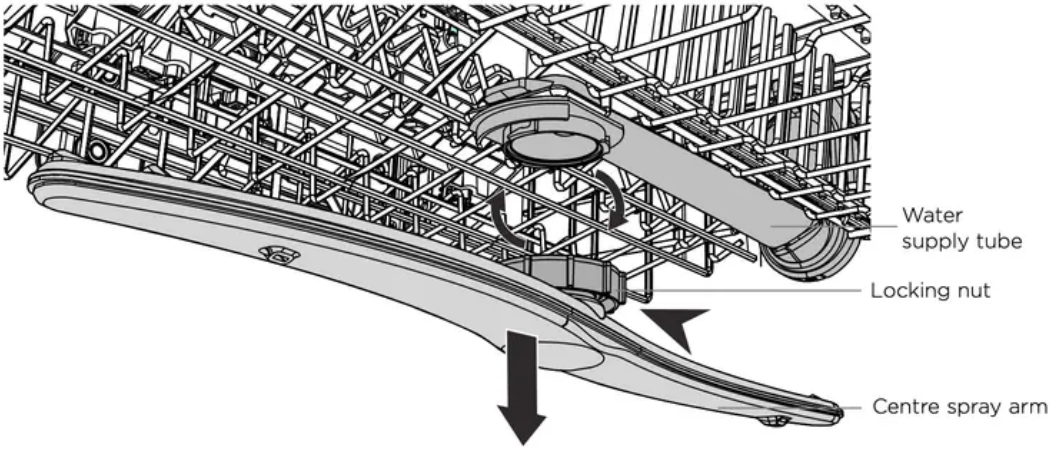

Cleaning the lower spray arm

- To remove the lower spray arm, simply lift the spray arm off its mounting.
- Rinse the spray arm thoroughly under running water, then refit it on its mounting.

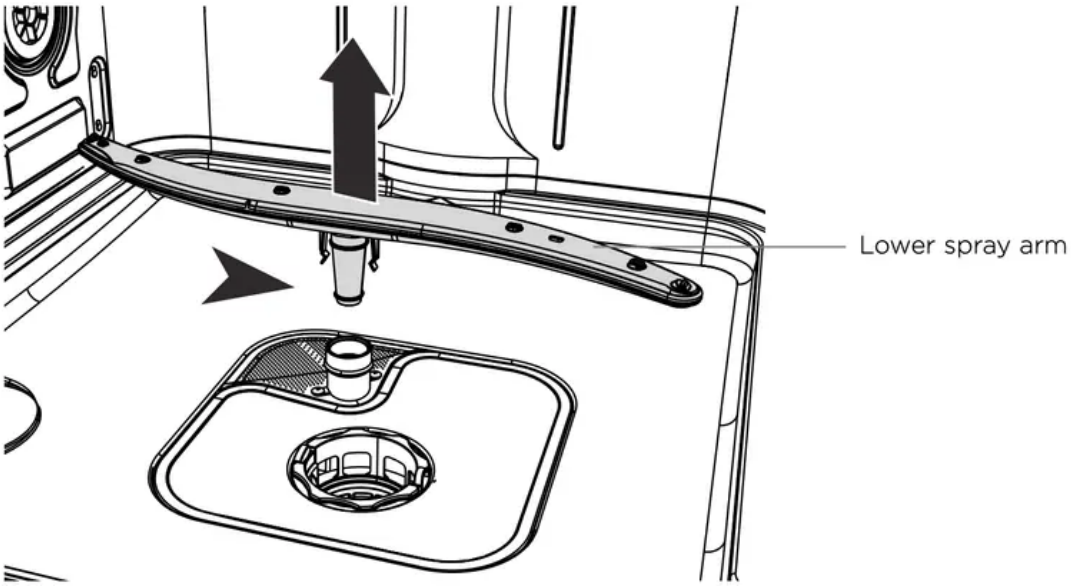

FAULT CODES

If the dishwasher malfunctions, it will display a fault code and beep. Check the following table below to see if you can correct the fault yourself.

If the dishwasher still will not work, or shows any other fault code

- Press ⏻ to turn the dishwasher off and wait a few minutes.
- Press ⏻ again to turn the dishwasher back on.

If the dishwasher still does not function and/or the problem persists, disconnect the dishwasher from the power supply, turn the water supply off, then contact Fisher & Paykel Customer Care with the fault code information.

FAULT CODES AND DESCRIPTIONS	POSSIBLE CAUSES	WHAT TO DO
A20 Drain fault	Drain hose is crimped or bent.	Check the drain hose and straighten if needed.
	The waste water is not draining out.	Ensure that the drain hose is connected in accordance with the installation instructions.
	The turbidity sensor is dirty and requires cleaning.	Gently clean the turbidity sensor with a soft brush (ie toothbrush) to remove any buildup. 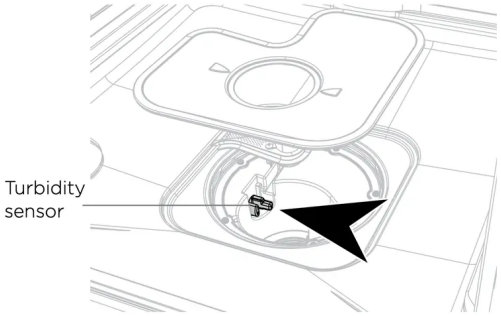
A 10 No water	Water tap not turned on.	Ensure the water is connected and turned on. Press ⏻ to restart the dishwasher.
	Insufficient water supply pressure.	Check household water pressure.
	Water inlet hose is crimped or bent, so no or not enough water gets to the dishwasher.	Check the water inlet hose and straighten if needed. Press ⏻ to restart the dishwasher.
	Drain hose is not connected correctly.	Ensure that the drain hose is connected in accordance with the installation instructions.
F30 Flooding	Flood switch activated.	Turn the dishwasher OFF and ON again. If fault persists, turn water off and disconnect the dishwasher from the power supply. Call Customer Care.
	Water flow error.	Switch dishwasher OFF and ON again. If fault persists call Customer Care.

F40		
F50	Electronics error.	Switch dishwasher OFF and ON again. If the fault persists call Customer Care.
A60	Water temperature error.	Switch dishwasher OFF and ON again. If fault persists call Customer Care.
F90 (DW60FC6 only)	Data/electronics error.	Switch dishwasher OFF and ON again. If fault persists call Customer Care.
FA0	Electronics/power supply error.	Switch dishwasher OFF and ON again. If fault persists call Customer Care.
Ad0 (DW60FC6 only)	Doorlock signal error.	Switch dishwasher OFF and ON again. If fault persists call Customer Care.
FC0 (DW60FC6 only)	Motor fault.	Switch dishwasher OFF at the power supply. Wait a few moments and switch ON again. If the fault persists, turn water off and disconnect from the power supply. Call Customer Care.

TROUBLESHOOTING

PROBLEM	POSSIBLE CAUSE	WHAT TO DO
Dishwasher will not start.	No power.	Ensure the dishwasher is plugged in and the power supply is turned on at the wall.
	The door is not properly closed.	Close the door.
	Start/Pause button ▶II has not been pressed.	Press the Start/Pause button ▶II.
	Water tap not turned on.	Ensure water is connected and turned on.
	Blocked strainer in water inlet hose.	Check the strainer and clean if necessary—it is located where the water inlet hose screws into the tap.
	Keylock is activated.	Cancel Keylock by pressing and holding ≫ and ⏲ (C1, C2 & C4 models) or ≫ and * (C6 models) together for 4 seconds until the keylock indicator goes out.
Lower spray arm rotates with difficulty.	Spray arm holes are blocked by small items or food particles.	Clean the spray arm. See 'Care and cleaning' for instructions.
Cover of detergent dispenser cannot be closed.	Detergent compartment has been overfilled.	Remove detergent until the cover can be closed.
	Detergent dispenser is clogged with remnants of detergent.	Wipe dispenser out with a damp cloth. Dry the dispenser before adding detergent.
Remnants of detergent stuck inside dispenser.	Compartment was damp when filled with detergent.	Wipe dispenser out with a damp cloth. Dry the dispenser before adding detergent.
	Keylock is activated.	

Buttons beep and do not respond.		Cancel Keylock by pressing and holding ≫ and ⏲ (C1, C2 & C4 models) or ≫ and * (C6 models) together for 4 seconds until the keylock indicator goes out.
Water remains inside dishwasher after wash has ended.	Drain hose is crimped, bent, or blocked.	Check the drain hose and straighten if needed.
	Pump is jammed.	Call your Fisher & Paykel Authorised Service Centre or Customer Care.
	Filter(s) blocked.	Clean the filter(s). See ‘Care and cleaning’ for instructions.
Foaming.	Incorrect amount or type of detergent used.	See section ‘Adding detergent’ or consult the detergent manufacturer’s instructions.
	Too much egg in the wash load.	Increase the amount of detergent.
	Rinse aid dosage level too high.	Decrease the rinse aid dosage.
	Rinse aid spills not wiped up.	Ensure that all rinse aid spills are wiped up when they occur.
The dishwasher stops suddenly during the wash.	Power or water supply has been interrupted.	Check the power and water supplies.
Knocking or rattling sound during wash.	Spray arm knocking against dishes.	Pause the wash and rearrange dishes. See sections ‘Controls and starting a wash’ and ‘Loading’.
	Dishes have been stacked incorrectly.	
Unclean dishes.	Wash programme unsuitable for load.	See section ‘Wash programmes and detergent quantities’ and select a suitable programme.
	Soils were too heavily baked on.	Dishes may need soaking.

	Spray arm(s) unable to rotate.	Ensure no items are obstructing the spray arm path.
	Dishwasher overloaded or incorrectly loaded.	See the ‘Loading’ section.
	The filters are incorrectly inserted.	See section ‘Care and cleaning’
	Detergent put in the wrong compartment.	See sections ‘Wash programmes and detergent quantities’ and ‘Adding detergent’.
	Excessive food not removed from dishes before loading.	Scrape all food scraps off dishes before loading.
	Unsuitable detergent.	Only use powdered or tablet detergent designed for domestic dishwashers.
	Not enough detergent.	See ‘Wash programmes and detergent quantities’ for recommended quantities. You may need to adjust these to suit your particular load and the hardness of your water supply
	Spray arm holes are blocked.	Clean the spray arm(s). See ‘Care and cleaning’ for instructions.
	The filters are blocked.	Clean the filters. See ‘Care and cleaning’ for instructions.
Plastic items are discoloured (e.g. stain left by tomato sauce).	Not enough detergent, not pre-rinsed.	Pre-rinse plastic dishes before placing in the dishwasher and/or add more detergent. Alternatively, using the Rinse programme after adding dishes may minimise staining.
White stains are left on dishes; glasses have a milky appearance.	Not enough detergent.	See section ‘Wash programmes and detergent quantities’ for recommended quantities. You may need to adjust these to suit the hardness of your water supply.
	Rinse aid dosage too low.	Increase rinse aid dosage. See ‘Using rinse aid’.

Dishes, cutlery have not dried.	Rinse aid dosage too low.	Increase rinse aid dosage. See ‘Using rinse aid’.
	Items removed too soon.	After the end of the wash programme, leave the door ajar and wait for several minutes to help drying.
	Rinse aid dispenser empty. (The rinse aid indicators are lit.)	Add rinse aid. See section ‘Using rinse aid’ for instructions.
Glasses have dull appearance.	Rinse aid dosage too low.	Increase rinse aid dosage. See ‘Using rinse aid’.
Tea stains or traces of lipstick have not been completely removed.	Not enough detergent.	See section ‘Wash programmes and detergent quantities’ for recommended quantities. You may need to adjust these to suit your particular load.
	Wash temperature too low.	Select a wash programme with a higher temperature (see section ‘Wash programme data’ for information).
Traces of rust on cutlery.	Cutlery is not sufficiently rustproof.	Wash by hand.
Glasses clouded and discoloured; milky coating	Hard water situation.	Increase detergent quantities.
	Glasses are not dishwasher proof.	Wash by hand.
Water marks left on glasses and cutlery.	Rinse aid level or dosage setting is too low.	Ensure there is rinse aid in dispenser. If necessary, increase the rinse aid setting or try using a wash programme with a higher temperature. See sections ‘Using rinse aid’ and ‘Wash programme data’.
Hard water		Increase the rinse aid setting and the amount of detergent. See section ‘Water hardness and dishwashing’. If living in an area with very hard water, consult a plumber on installing a household water softener.

Warning

This content is compiled from multiple sources and is provided for reference purposes only. It may not be complete or fully applicable to all situations. If you are unable to resolve your issue, please contact the product manufacturer or an authorized service provider for official support.

Document generated by ManualsFile