Familiarising yourself with your appliance

Controls

You can use the control panel to configure all functions of your appliance and to obtain information about the operating status.

Note: On certain models, specific details such as colour and shape may differ from those pictured.

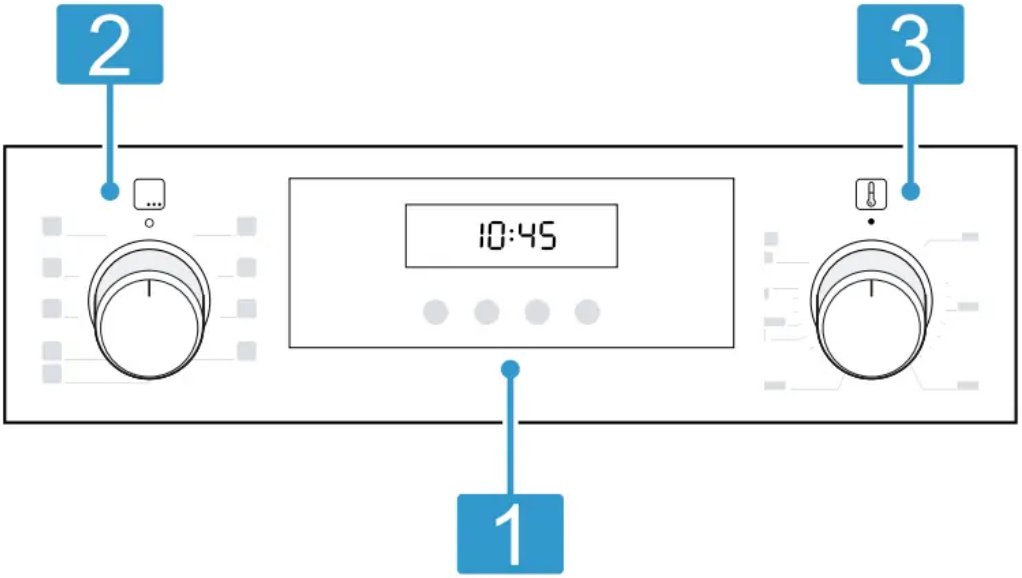

1. Buttons and display

The buttons are touch-sensitive surfaces. To select a function, simply press lightly on the relevant field.

The display shows symbols for active functions and the time-setting options.

- *“Buttons and display”*

2. Function selector

Use the function selector to set the types of heating and other functions.

You can turn the function selector clockwise or anti-clockwise from the zero setting o. Depending on the appliance, the function selector can be pushed in. Press on the function selector to click it into or out of the zero setting .

- *“Types of heating and functions”*

3. Temperature selector

Use the temperature selector to set the temperature for the type of heating and select settings for other functions.

You can turn the temperature selector clockwise or anti-clockwise from the zero setting •. Depending on the appliance, the temperature selector can be pushed in. Press on the temperature selector to click it into or out of the zero setting •.

- *“Temperature and setting levels”*

Buttons and display

You can use the buttons to set various functions for your appliance. The display shows the settings. If a function is active, the corresponding symbol lights up in the display. The clock symbol only lights up when you change the time.

Symbol	Function	Use
	Time-setting options	Select the time, timer, cooking time and the end time. To select the individual time-setting options, press the button several times.
–	Minus	Decrease the setting values.
+	Plus	Increase the setting values.
kg	Weight	Select a weight for the programmes.
kg	Childproof lock	Activate or deactivate the childproof lock.

Types of heating and functions

To ensure that you always use the right type of heating to cook your food, we have explained the differences and ap plications below.

Symbol	Type of heating	What it's used for/how it works
	3D hot air	Bake and roast on one or more levels. The fan distributes the heat from the ring-shaped heating element in the back wall evenly around the cooking compartment.
	Gentle hot air	Cook selected dishes gently on one level without preheating. The fan distributes the heat from the ring-shaped heating element in the back wall evenly around the cooking compartment. The food is cooked in phases using residual heat. Select a temperature of between 120 °C and 230 °C. Always keep the appliance door closed when cooking. This type of heating is used to determine the energy consumption in air recirculation mode and the energy efficiency class.
	Full-surface grill	Grill flat items such as steak and sausages, or make toast. Gratinate food. The entire area underneath the grill element becomes hot.
	Hot air grilling	Roast poultry, whole fish and larger pieces of meat. The grill element and the fan switch on and off alternately. The fan circulates the hot air around the food.
	Top/bottom heating	Traditionally bake or roast on one level. This type of heating is ideal for cakes with moist toppings. The heat is emitted evenly from above and below. This type of heating is used to measure the energy consumption in the conventional mode.

Other functions

Here, you can find an overview of other functions of your appliance.

Symbol	Function	Use
	Rapid heating	Rapidly preheat the cooking compartment without accessories. → *"Rapid heating", Page 10*
	Oven light	Illuminate the cooking compartment without heating. → *"Lighting", Page 8*
	Programme	Use programmed setting values for various types of food. → *"Programme", Page 12*
	Pyrolytic self-cleaning	Set the cleaning function, which cleans the cooking compartment virtually independently. → *"Pyrolytic self-cleaning ", Page 17*

Temperature and setting levels

There are different settings for the types of heating and functions.

Note: For grill setting 3, the appliance lowers the setting to grill setting 1 after approx. 20 minutes.

Symbol	Function	Use
•	Zero setting	The appliance is not heating up.
50–275	Temperature range	Set the temperature in the cooking compartment in °C.
1, 2, 3 or I, II, III	Grill settings	Set the grill settings for **Full-surface grill** and **Grill, small area** (depending on the appliance model). 1 = low 2 = medium 3 = high
1, 2, 3 or I, II, III	Cleaning settings	Set the cleaning settings for **Pyrolytic self-cleaning**. 1 = light 2 = medium 3 = intensive

Heat-up indicator

The appliance indicates when it is heating up. When the appliance is heating, the symbol lights up on the display. When you are preheating the appliance, the optimal time to place your food in the cooking compartment is when the symbol first goes out.

Cooking compartment

The functions in the cooking compartment make your appliance easier to use. Shelf supports The shelf supports in the cooking compartment enable you to place accessories at different heights. → "Accessories"

Your appliance has five shelf positions. The shelf positions are numbered from bottom to top. You can remove the shelf supports, e. g. for cleaning. → "Shelf supports"

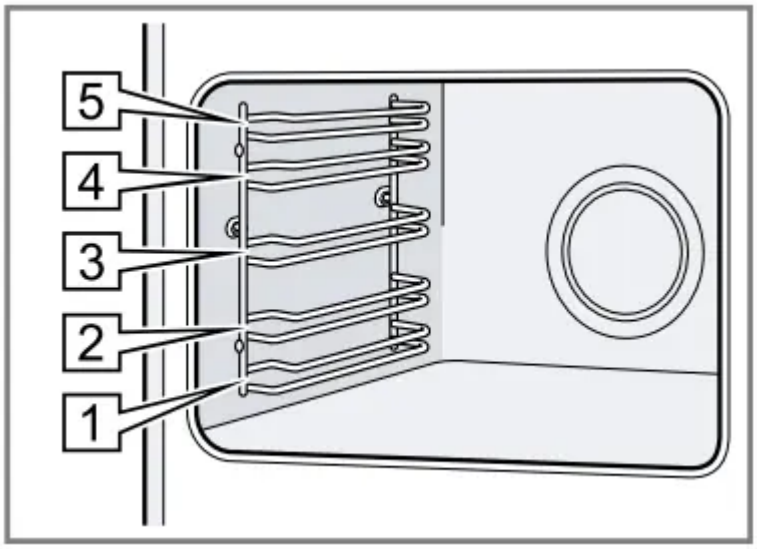

Lighting

The oven light lights up the cooking compartment.

With most types of heating and functions, the lighting lights up during operation. When the function selector is turned to bring operation to an end, the lighting goes out.

The **Oven light** setting on the function selector can be used to switch on the light without heating.

Cooling fan

The cooling fan switches on and off depending on the appliance's temperature. The hot air escapes above the door.

ATTENTION!

Do not cover the ventilation slot above the appliance door. The appliance overheats.

► Ensure that the ventilation slots are unobstructed.

To ensure that the appliance cools down more quickly after operation, the cooling fan continues to run for a certain period afterwards.

Appliance door

If you open the appliance door during operation, the operation continues.

Basic operation

Switching on the appliance

► Turn the function selector to any position other than the "Off" position o.

- The appliance is switched on.

Switching off the appliance

► Turn the function selector to the "Off" position o.

• The appliance is switched off.

Setting the type of heating and temperature

1. Use the function selector to set the type of heating.

2. Use the temperature selector to set the temperature or grill setting.

• The appliance starts heating after a few seconds.

3. When your food is ready, switch off the appliance. Tips

■ The most suitable type of heating for your food can be found in the description of the type of heating.

→ *"Types of heating and functions", Page 6*

■ You can also set a cooking time and end time on the appliance.

→ *"Time-setting options", Page 11*

Changing the type of heating

You can change the type of heating at any time.

► Use the function selector to set the required type of heating.

Changing the temperature

You can change the temperature at any time.

► Use the temperature selector to set the required temperature.

Rapid heating

To save time, you can use rapid heat-up to shorten the preheat time.

Only use rapid heat-up when a temperature of over 100 °C has been set.

After rapid heat-up, it is best to use the following types of heating:

- 3D hot air
- Top/bottom heating

Setting rapid heating

To ensure an even cooking result, do not place the food in the cooking compartment until rapid heating has come to an end.

1. Use the function selector to select rapid heating

2. Use the temperature selector to set the required temperature.

   - Rapid heating starts after a few seconds
   - When the rapid heating process ends, an audible signal sounds and the heating indicator goes out.

3. Use the function selector to set a suitable type of heating.

4. Place the food in the cooking compartment.

Time-setting options

Your appliance has different time-setting options, with which you can control its operation.

Overview of the time-setting options

With the button, select the different time-setting options.

Time-setting option	Use
Timer	The timer can be set independently of the appliance when it is in operation. It does not affect the appliance.
Cooking time	If you set a cooking time, operation of the appliance stops automatically once this time has elapsed.
End time	For the cooking time, you can set the time at which operation ends. The appliance starts up automatically so that it finishes cooking at the required time.
Time	You can set the time.

Setting the timer

The timer runs independently of the appliance when it is in operation. The timer can be set when the appliance is switched on or off, up to 23 hours and 59 minutes. The timer has its own audible signal so that you can tell whether it is the timer or a cooking time which has elapsed.

Note: The timer and cooking time cannot count down at the same time. If a cooking time has already been set, you cannot set the timer.

1. Press the button repeatedly until is highlighted in the display.

2. — or + button to set the timer duration.

Button	Default value
—	5 minutes
+	10 minutes

The timer duration can be set in 30-second increments up to 10 minutes. Above 10 minutes, the time increments become longer the higher the value.

- The timer starts and the timer duration begins to count down after a few seconds.
- An audible signal sounds and the timer duration is zero in the display when the timer duration has elapsed.

3. Once the timer duration has elapsed:

- Press any button to switch off the timer.

Changing the timer

You can change the timer duration at any time.

Requirement: is highlighted on the display.

► Use the — or + button to change the timer duration.

- The appliance applies the change after a few seconds.

Cancelling the timer

You can cancel the timer duration at any time.

Requirement: is highlighted on the display.

► Use the — button to reset the timer duration to zero.

- After a few seconds, the appliance applies the change and goes out.

Setting the cooking time

You can set a cooking time for operation of up to 23 hours 59 minutes.

Requirement: The type of heating and temperature or setting are set.

1. Press the button repeatedly until is highlighted in the display.

2. Use the **—** or **+** button to set the cooking time.

Button	Default value
—	10 minutes
+	30 minutes

The cooking time can be set in 1-minute increments up to 1 hour, and then in 5-minute increments.

- The appliance starts heating and the cooking time counts down after a few seconds.
- If the cooking time has elapsed, an audible signal sounds and the display shows the cooking time as zero.

3. When the cooking time has elapsed:

- Press any button to end the audible signal before it sounds.
- To set a cooking time again, press the + button.
- When your food is ready, switch off the appliance.

Changing the cooking time

You can change the cooking time at any time.

Requirement: **I->I** is highlighted on the display.

► Change the cooking time using the — or + button.

- The appliance applies the change after a few seconds.

Cancelling the cooking time

You can cancel the cooking time at any time.

Requirement: **I->I** is highlighted on the display.

► Reset the cooking time to zero using the — button. **a** After a few seconds, the appliance applies the change and continues to heat without a cooking time.

Setting the end time

You can delay the time at which cooking is due to finish by up to 23 hours and 59 minutes.

Notes

- The end time cannot be set for types of heating with grill function.
- In order to achieve a good cooking result, do not delay the end time once the appliance is already in operation.
- Food will spoil if you leave it in the cooking compartment too long.

Requirements

- The type of heating and temperature or setting are set.
- A cooking time is set.

1. Press the button repeatedly until **->I** is highlighted in the display.

2. Press the **—** or **+** button.

- The display shows the calculated end time.

3. Use the **—** or **+** button to delay the end time.

- After a few seconds, the appliance applies the setting and the display shows the set end time.
- Once the calculated start time has been reached, the appliance starts heating up and the cooking time starts counting down.
- Once the time has elapsed, an audible signal sounds and the display shows the cooking time as zero.

4. When the cooking time has elapsed:

- Press any button to end the signal prematurely.
- To set another cooking time, press the + button.
- When your food is ready, switch off the appliance.

Changing the end time

In order to achieve a good cooking result, you can only change the set end time before operation starts and the cooking time starts counting down.

Requirement: **->I** is highlighted on the display.

► Use the — or + button to delay the end time.

- The appliance applies the change after a few seconds.

Cancelling the end time

You can delete the set end at any time.

Requirement: **->I** is highlighted on the display.

► Reset the end time to the current time plus the set cooking time using the — button.

a After a few seconds, the appliance applies the change and starts heating up. The cooking time counts down.

Setting the time on the clock

Once the appliance has been connected to the mains or following a power failure, the time flashes on the display. The time starts at "12:00". Set the current time.

Requirement: The function selector must be set to the "Off" position o.

1. Use the **—** or + button to set the time.

2. Press the button.

- The time that is set appears on the display.

Tip: You can go to the basic settings→ Page 14 to specify whether or not the time should be shown on the display.

Changing the time on the clock

You can change the time on the clock at any time.

Requirement: The function selector must be set to the "Off" position o.

1. Press the button repeatedly until is highlighted in the display.
2. Use the — or + button to change the time.
   - The appliance applies the change after a few seconds.

Programme

The programmes help you to use your appliance to prepare different dishes by selecting the optimum settings automatically.

Cookware for programmes

You should therefore use heat-resistant cookware that is suitable for temperatures up to 300 °C.

Glass or glass ceramic cookware is best. The joint should cover approx. two thirds of the cookware base.

Cookware made from the following material is not suitable:

■ Bright, shiny aluminium

■ Unglazed clay

■ Plastic or plastic handles

Programme table

The programme numbers are assigned to specific foods. The weight can be set to between 0.5 kg and 2.5 kg.

No.	Food	Cookware	Weight setting	Add liquid	Shelf positions	Information
01	**Chicken, unstuffed** Ready to cook, seasoned	Roasting dish with glass lid	Chicken weight	No	2	Place in the cookware with the breast facing up
02	**Turkey breast** Whole, seasoned	Roasting dish with glass lid	Turkey breast weight	Cover the bottom of the roasting dish and add up to 250 g vegetables if you wish	2	Do not sear the meat beforehand
03	**Vegetable stew** Vegetarian	Deep roasting dish with lid	Total weight	As per recipe	2	Cut vegetables that take longer to cook (e.g. carrots) into smaller pieces than vegetables that take less time to cook (e.g. tomatoes)
04	**Goulash** Diced beef or pork, with vegetables	Deep roasting dish with lid	Total weight	As per recipe	2	Place the meat at the bottom and cover with vegetables Do not sear the meat beforehand
05	**Meat loaf, fresh** Minced beef, pork or lamb	Roasting dish with lid	Roast weight	No	2	-
06	**Pot-roasted beef** E.g. prime rib, shoulder, rump or marinated beef roast	Roasting dish with lid	Weight of meat	Almost cover the meat with liquid	2	Do not sear the meat beforehand
07	**Beef olives** Stuffed with vegetables or meat	Roasting dish with lid	Total weight of all the stuffed beef olives	Add stock, water or another liquid to the dish until the beef olives are almost covered	2	Do not sear the meat beforehand
08	**Leg of lamb, well done** Boned, seasoned	Roasting dish with lid	Weight of meat	Cover the bottom of the roasting dish and add up to 250 g vegetables if you wish	2	Do not sear the meat beforehand
09	**Joint of veal, lean** E.g. tenderloin or eye	Roasting dish with lid	Weight of meat	Cover the bottom of the roasting dish and add up to 250 g vegetables if you wish	2	Do not sear the meat beforehand
10	**Pork neck joint** Boned, seasoned	Roasting dish with glass lid	Weight of meat	Cover the bottom of the roasting dish and add up to 250 g vegetables if you wish	2	Do not sear the meat beforehand

Preparing food for the programme

Use fresh and, ideally, chilled food.

1. Weigh the food.

The weight of the food is required in order to correctly set the programme.

2. Add the food to the cookware.

3. Place the cookware onto the wire rack.

Always place the cookware into the cooking compartment while it is cold.

Setting a programme

The appliance selects the optimal type of heating, temperature and cooking time. All you need to do is set the weight.

1. Use the function selector to set **Programme** .

2. The temperature selector must remain in the "Off" position •.

3. Use the **—** or + button to set the required programme.

4. Press the kg button.

5. Use the **—** or **+** button to set the weight of your food. Always set the next higher weight.

- The display shows the calculated cooking time. The cooking time cannot be changed.
- For some programmes, the button can be used to delay the end. →*"Setting the end time",*
- To change the programme, press the kg button.
- After a few seconds, the programme starts and the cooking time counts down.
- If the programme has ended, an audible signal sounds and the display shows the cooking time as zero.

6. When the programme ends:

- Press any button to end the audible signal prematurely.
- To set a cooking time for further cooking, press the + button. The appliance continues to heat using the programme settings.
- When your food is ready, switch off the appliance.

Childproof lock

You can secure your appliance to prevent children from accidentally switching it on or changing the settings.

Note: You can go to the basic settings

→ Page 14 to specify whether you want the option to set the childproof lock.

Activating and deactivating the childproof lock

Requirement: The function selector must be set to the "Off" position .

▶ To activate the childproof lock, press and hold the button until appears in the display.

- To deactivate the childproof lock, press and hold the button until goes out in the display

Basic settings

You can configure the appliance to meet your needs.

Overview of the basic settings

Here you can find an overview of the basic settings and factory settings. The basic settings depend on the features of your appliance.

Display	Basic setting	Selection
c 1	Signal duration upon completion of a time or timer period	1 = 10 seconds 2 = 30 seconds[1] 3 = 2 minutes
c 2	Waiting time until a setting is applied	1 = 3 seconds[1] 2 = 6 seconds 3 = 10 seconds
c 3	Button tone when pressing a button	0 = off 1 = on[1]
c 4	Brightness of the display illumination	1 = dark 2 = medium[1] 3 = bright

[1] Factory setting (may vary according to model)
[2] Depending on the appliance specifications

c 5	Time display	0 = hide the time 1 = display the time[1]
c 6	Childproof lock can be adjusted	0 = no 1 = yes[1] 2 = yes, with locked door
c 7	Interior lighting during operation	0 = no 1 = yes[1]
c 8	Cooling fan run-on time	1 = short 2 = medium[1] 3 = long 4 = extra-long
c 9	Telescopic shelves retrofitted[2]	0 = no [1] (for rails and 1-level pull-out) 1 = yes (for 2- and 3-level pull-out)
c A	Reset all values to factory settings	0 = no[1] 1 = yes

Changing basic settings

Requirement: The appliance is switched off.

1. Press and hold the button for approximately four seconds.

   - The first basic setting appears in the display, e.g c 1 1. .

2. Use the or button to change the setting.

3. Use the button to switch to the next basic setting.

4. To save the changes, press and hold the button for approx. four seconds.

Note: Your changes to the basic settings will be retained even after a power failure.

Discarding changes to the basic settings

▶ Turn the function selector.

- All changes are discarded and not saved.

Cleaning and servicing

To keep your appliance working efficiently for a long time, it is important to clean and maintain it carefully.

Cleaning products

In order to avoid damaging the various oven surfaces on the appliance, do not use unsuitable cleaning products.

Suitable cleaning agents

Only use cleaning agents that are suitable for the different surfaces on your appliance. Follow the instructions on cleaning the appliance.

→ “Cleaning the appliance”

Appliance front

Surface	Suitable cleaning agents	Notes
Stainless steel	■ Hot soapy water ■ Special stainless steel cleaning products suitable for hot surfaces	To prevent corrosion, remove any limescale, grease, s (e.g. egg white) stains on stainless steel fronts immedi thin layer of the stainless steel cleaning product with a
Plastic or painted surfaces E.g. control panel	■ Hot soapy water	Do not use glass cleaner or a glass scraper.
Appliance door		
Area	**Suitable cleaning agents**	**Notes**
Door panels	■ Hot soapy water	Do not use a glass scraper or a stainless steel wool. **Tip:** Remove the door panels in order to clean them th *→ "Appliance door"*
Door cover	■ Made of stainless steel: Stainless steel cleaner ■ Made of plastic: Hot soapy water	Do not use glass cleaner or a glass scraper. **Tip:** Remove the door cover for thorough cleaning. → *door"*

Door handle	Hot soapy water	To avoid permanent stains, remove descaling agents f handle immediately.
Cooking compartment		
Area	**Suitable cleaning agents**	**Notes**
Enamel surfaces	• Hot soapy water • Vinegar water • Oven cleaner	Soak any heavily soiled areas and use a brush or stee Leave the appliance door open to dry the cooking com cleaning it. **Tip:** It is best to use the cleaning function. → *"Pyrolytic self-cleaning "* **Notes** ■ Enamel burns at very high temperatures, causing mi discolouration. The functionality of your appliance is no this. ■ The edges of thin trays cannot be completely ename be rough. This does not impair corrosion protection. ■ Food residues will leave a white coating on the enan The coating does not pose a health risk. The functiona appliance is not affected by this. You can remove resid juice.
Glass cover for the oven light	Hot soapy water	Use oven cleaner to remove very heavy soiling.
Rails	Hot soapy water	Soak any heavily soiled areas and use a brush or stee **Tip:** Remove the shelf supports for cleaning. → *"Shelf supports", Page 18*
Accessorles	Hot soapy water	Soak any heavily soiled areas and use a brush or stee Enamelled accessories are dishwasher-safe.
	Oven cleaner	

Cleaning the appliance

In order to avoid damaging the appliance, you must clean your appliance only as specified, and with suitable cleaning products.

Requirement: Read the information on cleaning products.

→ "Cleaning products"

1. Clean the appliance using hot soapy water and a dish cloth.

    • For some surfaces, you can use alternative cleaning agents.

    → "Suitable cleaning agents"

2. Dry with a soft cloth.

► Before using the appliance, remove the worst of the food residues and remnants from the cooking compartment, heating elements and accessories.

Requirement: Read the information on cleaning products.

→ *"Cleaning products"*

The **Pyrolytic self-cleaning** cleaning function cleans the cooking compartment almost by itself.

Use the cleaning function to clean the cooking compartment every two to three months. If required, you can use the cleaning function more frequently. The cleaning function requires approx. 2.5-4.8 kilowatt hours.

Preparing the appliance for the cleaning function

In order to achieve a good cleaning result, prepare the appliance carefully.

1. Remove accessories and cookware from the cooking compartment.

2. Unhook the shelf supports and remove them from the cooking compartment.

→ *“Shelf supports”*

3. Remove heavy soiling from the cooking compartment.

4. Use a detergent solution and a soft cloth to clean the surfaces at the edges of the cooking compartment around the door seal.

Do not remove or scrub the door seal.

Use oven cleaner to remove stubborn dirt from the inner door pane.

5. Remove any objects from the cooking compartment. The cooking compartment must be empty.

Setting the cleaning function

Ventilate the kitchen while the cleaning function is running.

Requirement: Prepare the appliance for the cleaning function.

1. Use the function selector to set **Pyrolytic selfcleaning** .

2. Use the temperature selector to set the cleaning setting.

Cleaning setting	Cleaning level	Duration in hours
1	Lightly soiled	Approx. 1:15
2	Medium	Approx. 1:30
3	High	Approx. 2:00

Select a higher cleaning setting for very heavy or older soiling.

The duration cannot be changed.

- The cleaning function starts after a few seconds and the time counts down.
- For safety reasons, the appliance door locks automatically once a certain temperature is reached in the cooking compartment. appears in the display
- Once the cleaning function has ended, an audible signal sounds and the display shows the duration as zero.

3. Switch off the appliance.

Once the appliance has cooled down sufficiently, the appliance door unlocks and fi goes out.

4. Prepare the appliance for use. → Page 18

Preparing the appliance for use following the cleaning function

1. Allow the appliance to cool down.

2. Wipe off any ash that has been left behind in the cooking compartment and around the appliance door with a damp cloth.

3. Remove white residues with lemon juice.

Note: White residues on the enamel surfaces may be caused by heavy soiling. These food residues are harmless. The deposits do not compromise the functionality of the appliance.

4. Attach the shelf supports.

→ *"Shelf supports"*

Shelf supports

To clean the rails and the cooking compartment, or to replace the rails, you can remove these.

Detaching the shelf supports

1. Lift the rail forwards slightly 1 and detach it 2.

2. Pull the whole rail to the front 3 and remove it.

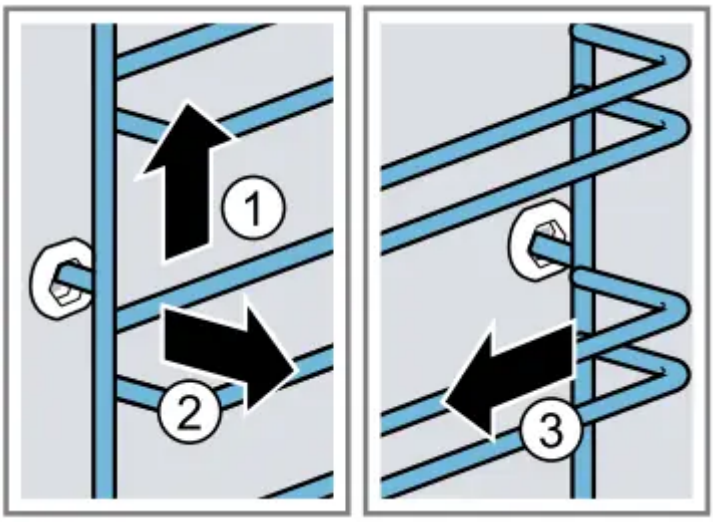

3. Clean the rail.

→ *"Cleaning products"*

Attaching the shelf supports

Notes

- The rails only fit on the right or left.
- For both rails, ensure that the curved rods are at the front.

1. First, push the rail into the middle of the rear socket 1 until the rail rests against the cooking compartment wall, and then push this back 2.

2. Push the rail into the front socket 3 until the rail also rests against the cooking compartment wall, and then press this downwards 4.

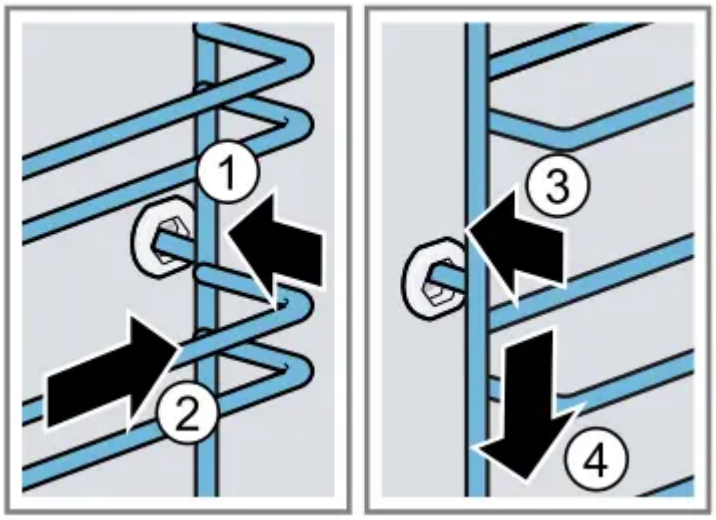

Appliance door

To ensure that your appliance retains its appearance and remains fully functioning for a long time, you can detach the appliance door and clean it.

Detaching the appliance door

1. Open the appliance door fully and push in the direction of the applian
2. Open the locking levers on the left- and right-hand hinge

Locking levers opened	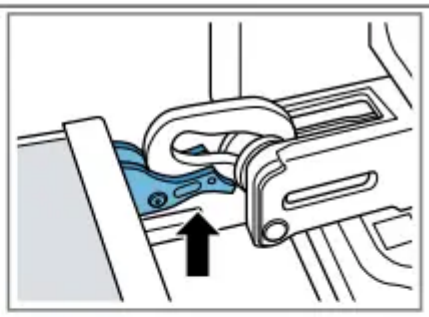 The hinge is now secured and cannot snap shut.
Locking levers closed	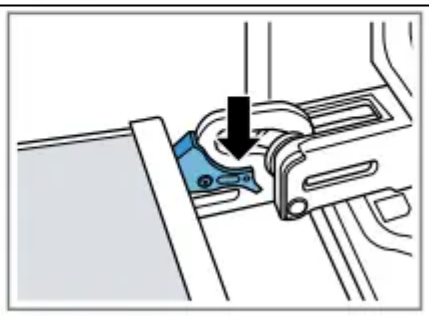 The appliance door is secured and cannot be detached.

• The locking levers are open. The hinges are now secured and cannot snap shut.

3. Close the appliance door fully 1 . Grab hold of the appliance door with both hands (on the left and right) and pull it upwards and out 2.

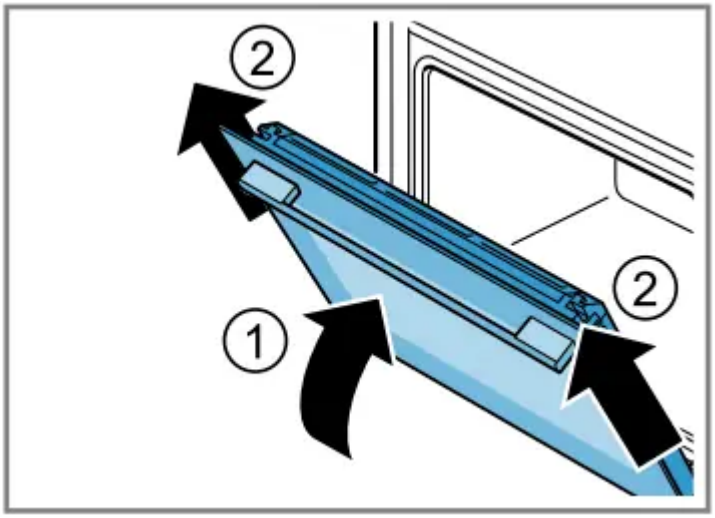

4. Carefully place the appliance door on a level sur face.

Attaching the appliance door

1. Note: Ensure that the appliance door slides onto the hinges without any resistance. If you feel any resistance, check whether you are sliding it in at the correct opening.

Slide the appliance door straight onto the two hinges. Slide the appliance door on as far as it will go.

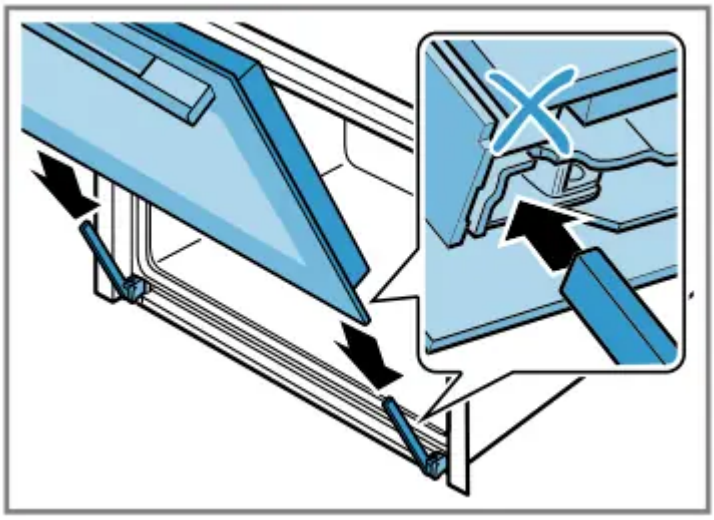

2. Using both hands, press down on the left and right of the door cover from above to check whether the appliance has been pushed in as far as it will go.

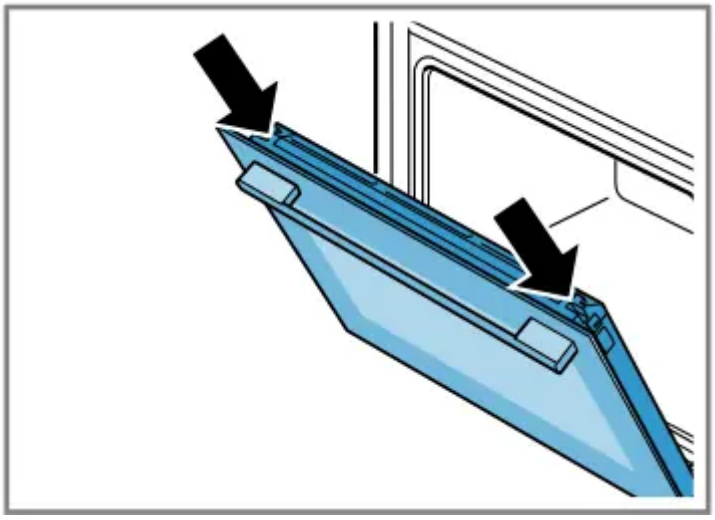

3. Open the appliance door fully.

4. Close the locking levers on the left- and right-hand hinges.

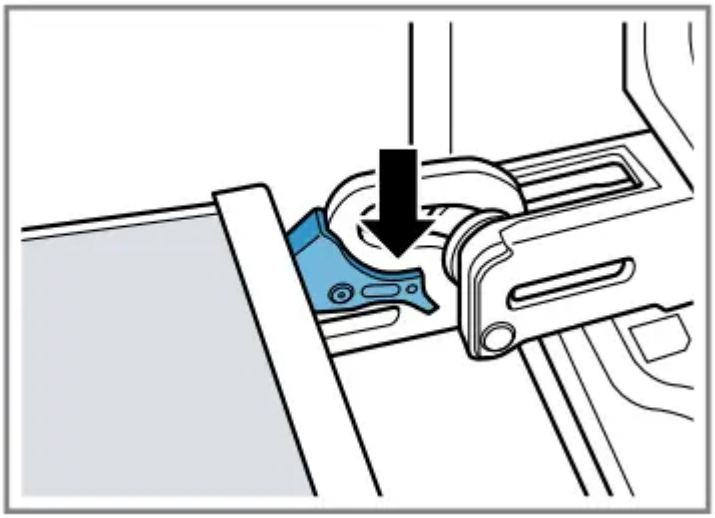

• The locking levers are closed. The appliance door is secured and cannot be detached.

5. Close the appliance door.

Removing the door panes

1. Open the appliance door slightly.

2. Push on the left- and right-hand side of the door cover from the outsideoutsideoutside1 until it is released.

3. Remove the door cover 2 .

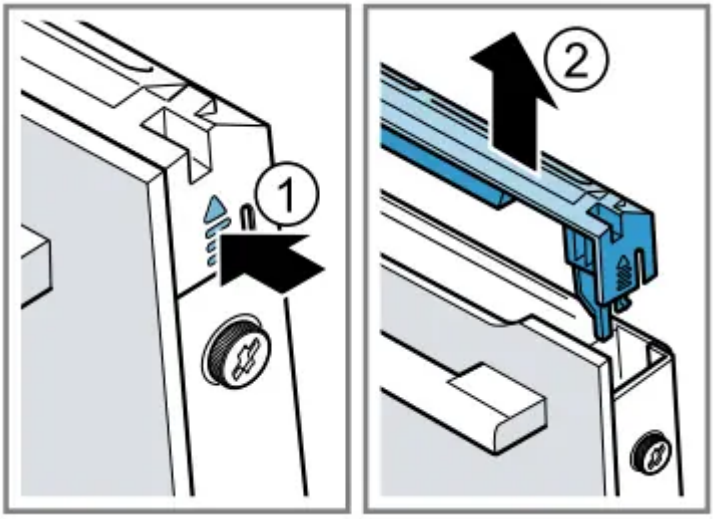

4. Clean the door cover.

→ "Suitable cleaning agents"

5. Undoing and removing the left- and right-hand screws on the appliance door 1

6. Place a folded-up tea towel in the appliance door. Pull the front pane up and out 2.

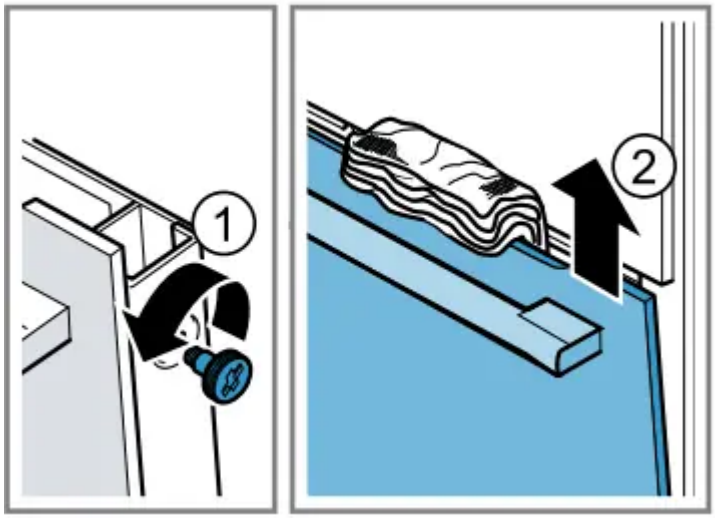

7. Set the front pane down on a level surface with the door handle facing down.

8. Press the intermediate pane against the appliance with one hand while pushing the left- and right-hand retainers a upwards. Do not detach the retainers a.

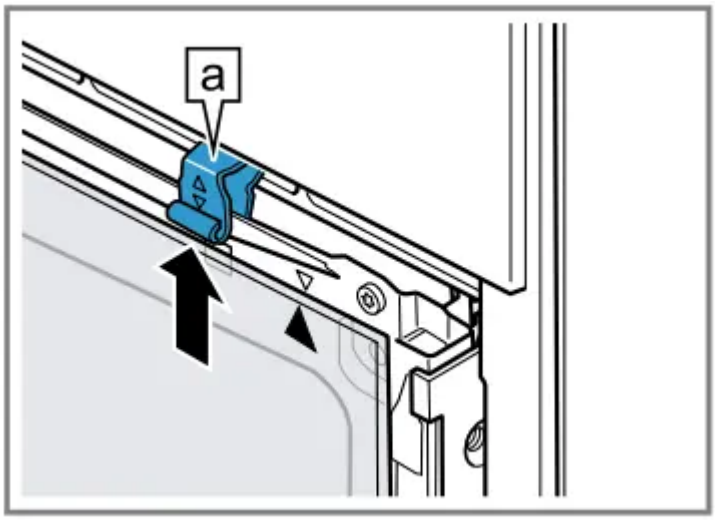

9. Remove the intermediate pane.

10. Clean the removed door panes on both sides with glass cleaner and a soft cloth.

11. Clean the appliance door.

→ "Suitable cleaning agents"

12. Dry the door panes and refit them.

→ “Fitting the door panes”

Fitting the door panes

1. Turn the intermediate pane until the arrow is in the top right.

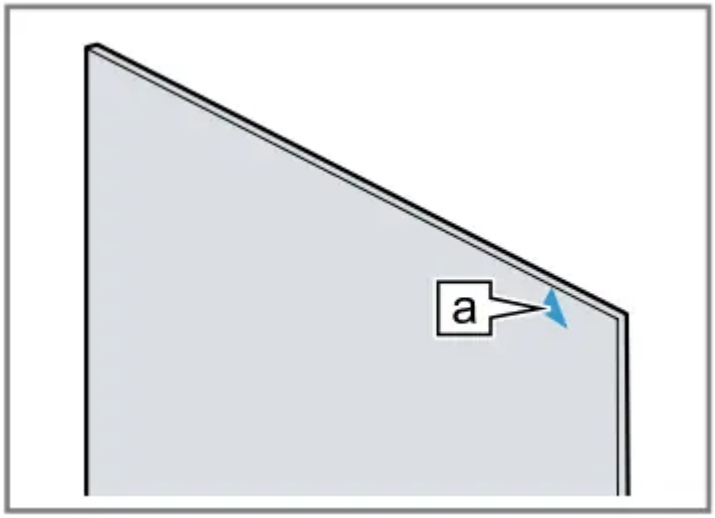

2. Insert 1 the intermediate pane into the retainer at the bottom and push it in firmly at the top.

3. Push the left- and right-hand retainer [a] downwards until the intermediate pane is clamped 2 .

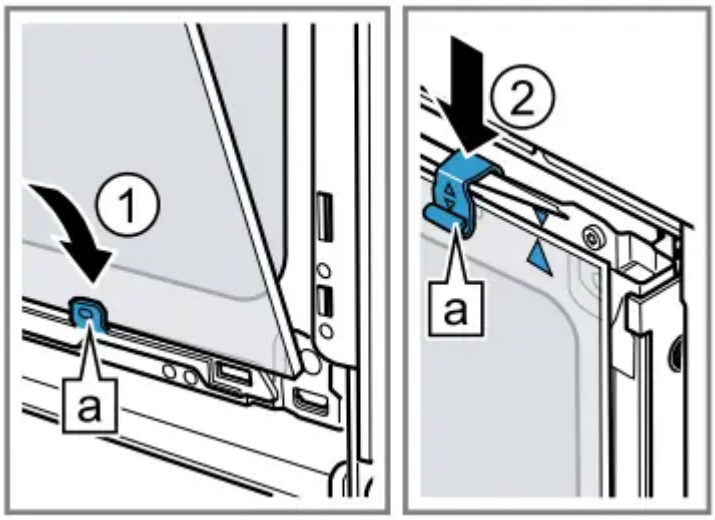

4. Attach the front pane downwards into the left- and right-hand retainers [a] ①.

5. Push the front pane to the appliance until the left and right-hand hook [a] is opposite the support [b] ② .

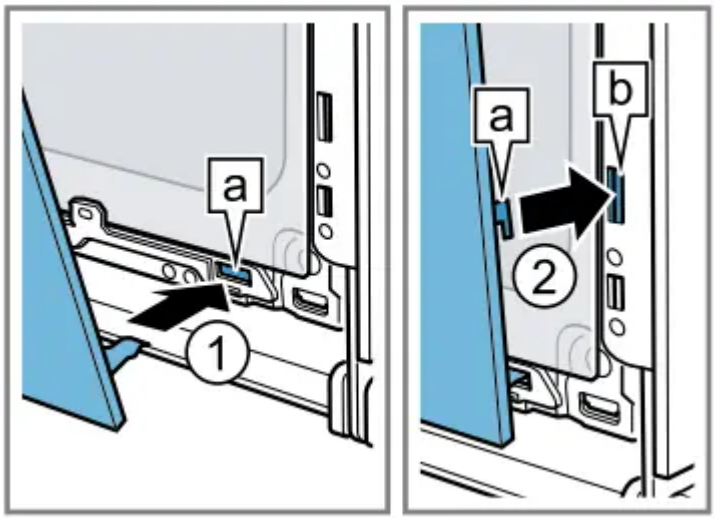

6. Push the front pane in at the bottom 1 until you hear it click into place.

7. Open the appliance door slightly and remove the tea towel.

8. Screw both screws back in on the left and right of the appliance door

9. Put the door cover in position and push down on it 2 until you hear it click into place.

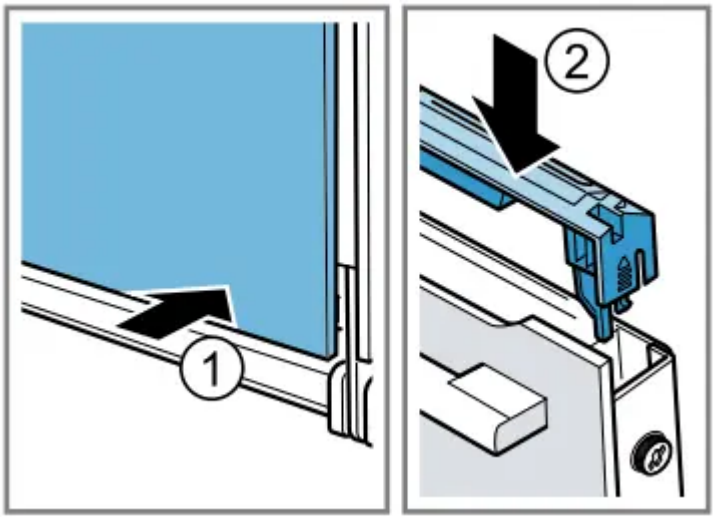

10. Close the appliance door.

Troubleshooting

You can rectify minor faults on your appliance yourself. Read the troubleshooting information before contacting after-sales service. This will avoid unnecessary costs.

Malfunctions

Fault	Cause and troubleshooting
The appliance is not working.	The circuit breaker is faulty. ► Check the circuit breaker in the fuse box.
	There has been a power cut. ► Check whether the lighting in your kitchen or other appliances are w
Appliance is not heating; the colon flashes in the display.	Demo mode is activated. **1.** Briefly disconnect the appliance from the power supply by switching breaker in the fuse box off and back on again. **2.** Deactivate demo mode within five minutes by changing the basic se to 0. . → *"Basic settings"*
The appliance door cannot be opened; lights up in the display.	The childproof lock locks the appliance door. ► Use the kg button to deactivate the childproof lock. → *"Childproof l*
The appliance door cannot be opened; lights up in the display.	The cleaning function locks the appliance door. ► Allow the appliance to cool down until goes out in the display. → *self-cleaning "*
The time flashes in the display.	There has been a power cut. ► Reset the time. → *"Setting the time on the clock"*
The time does not appear in the display when the appliance is switched off.	The basic setting has been changed. ► Change the basic setting for the time display. → *"Basic settings"*
	Childproof lock is activated.

lights up in the display and no settings can be made on the appliance.	► Use the kg button to deactivate the childproof lock. → *"Childproof l*

h flashes in the display and the	The cooking compartment is too hot for the selected operation.
appliance will not start.	**1.** Switch off the appliance and allow it to cool down. **2.** Restart the operation.
F 8 appears in the display.	The maximum cooking time has been reached. To prevent an unwante permanent operation, the appliance automatically stops heating after s hours if the settings are unchanged. ► Switch off the appliance. You can configure new settings if required. **Tip:** To prevent the appliance from switching off when you do not e.g. for an extremely long preparation time, set a cooking time. → *"Time-setting options"*
A message with E appears in the display, e.g. E05-32.	Electronics fault **1.** Press the button. - If required, reset the time. • If the fault was a one-off, the error message disappears. **2.** If the error message appears again, call the after-sales service. exact error message and the E no. of your appliance. → *"Customer Service"*

Replacing the oven light bulb

If the light in the cooking compartment fails, change the oven light bulb.

Note: Heat-resistant, 40-watt, 230 V halogen bulbs are available from the after-sales service or specialist retailers. Only use these bulbs. Hold the new halogen bulbs only with a clean, dry towel. This increases the service life of the bulb.

Requirements

- The appliance is disconnected from the power supply.

- The cooking compartment has cooled down.
- You have a new halogen bulb to replace the old one.

1. Place a tea towel in the cooking compartment to prevent damage.

2. Turn the glass cover anti-clockwise to remove it 1.

3. Pull out the halogen bulb without turning it 2.

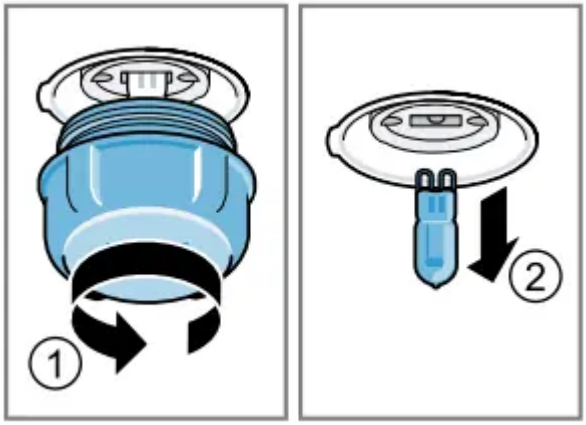

4. Insert the new halogen lamp and press it firmly into the socket.

Make sure the pins are positioned correctly.

5. Depending on the appliance model, the glass cover may have a sealing ring. Put the sealing ring in position.

6. Screw the glass cover on.

7. Take the tea towel out of the cooking compartment.

8. Connect the appliance to the power supply.

Warning

This content is compiled from multiple sources and is provided for reference purposes only. It may not be complete or fully applicable to all situations. If you are unable to resolve your issue, please contact the product manufacturer or an authorized service provider for official support.

Document generated by ManualsFile