User manual Television

Accessories List

The following accessories are included with TV:

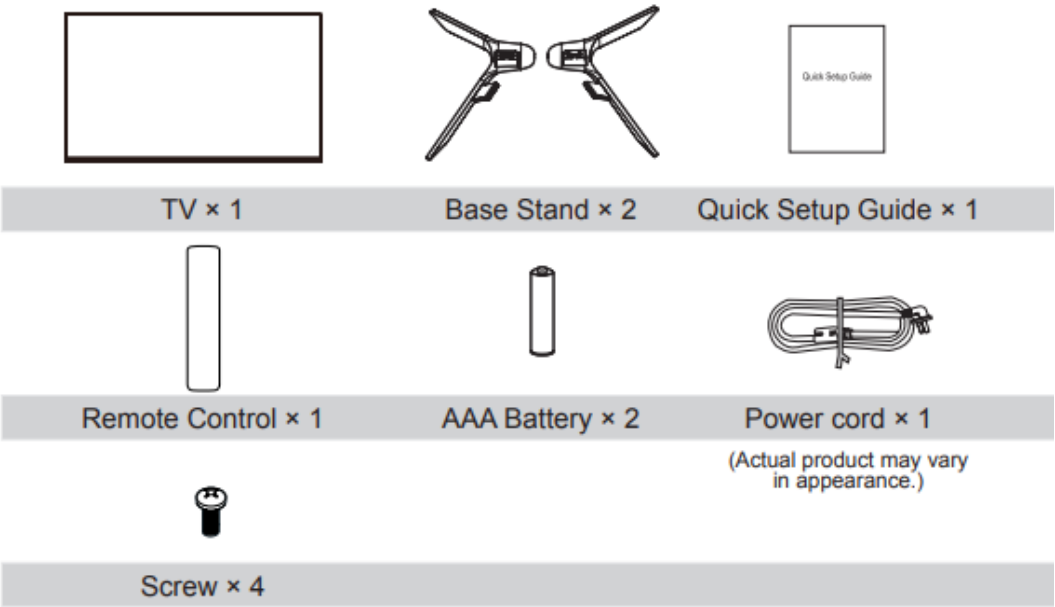

NOTE The accessories may be different from the list above due to different models, countries/ regions, please refer to the actual accessory bag.

Installing the Stand or Wall Mount Bracket

Installing the Stand

CAUTION

- Be sure to disconnect the A/C power cord before removing a base stand or installing wall mount brackets.
- The screen display is very fragile, and must be protected at all times when installing the base stand. Be sure that no hard or sharp object, or anything that could scratch or damage the screen display, comes into contact with it. DO NOT exert pressure on the front of the TV at any time because the screen could crack.

Follow the illustrations and textual instructions below to complete the installation steps:

1. Carefully place your TV facedown on a soft, flat surface to prevent damage to the TV or scratching to the screen.

2. Take out the 2 stands from the accessory bag and then insert the stands into the bottom slots of the TV.

3. Secure the Base Stand to the TV with the 4 screws in the accessory bag tightly.

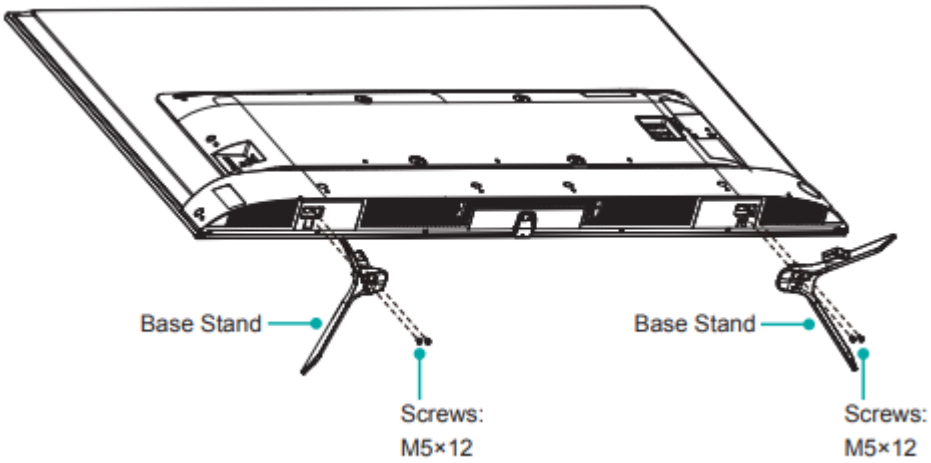

Installing the Wall Mount Bracket

Wall-Mount hole pattern (mm)	300 × 200
Wall-Mount screw size	M6

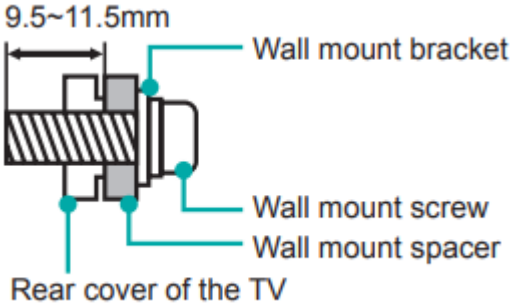

Follow instructions provided with the wall mount bracket.

NOTES

- The diameter and length of the screws differ depending on the wall mount bracket model.
- Wall mount bracket is optional, your device may not have wall mount bracket, please refer to the actual accessories.

TV Front

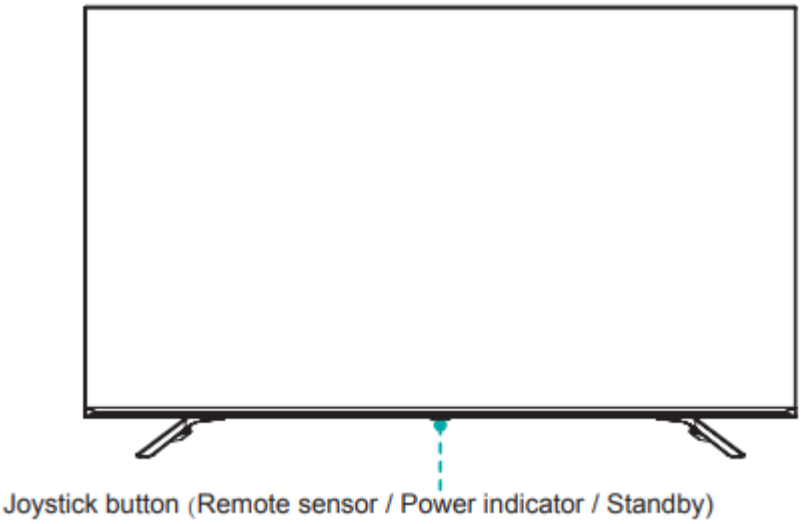

Item	Description
Remote sensor	Receive remote signals from the remote control. Do not put anything near the sensor, as its function may be affected.
Power indicator	The light is red in standby mode.
 Standby / Source	Press the joystick button to power on the TV. Press the joystick button to call up the menu, when the focus is on "Power Off", press the joystick button to turn the TV into standby mode. Press the joystick button to call up the menu and then select among the different input signal sources.
 VOL + / -	Toggle the joystick button right and left to adjust the volume.
 CH + / -	Toggle the joystick button forward and backward to control the channel.

NOTE Powering on the TV requires several seconds to load program. Do not rapidly turn the TV off as it may cause the TV to work abnormally.

TV Rear

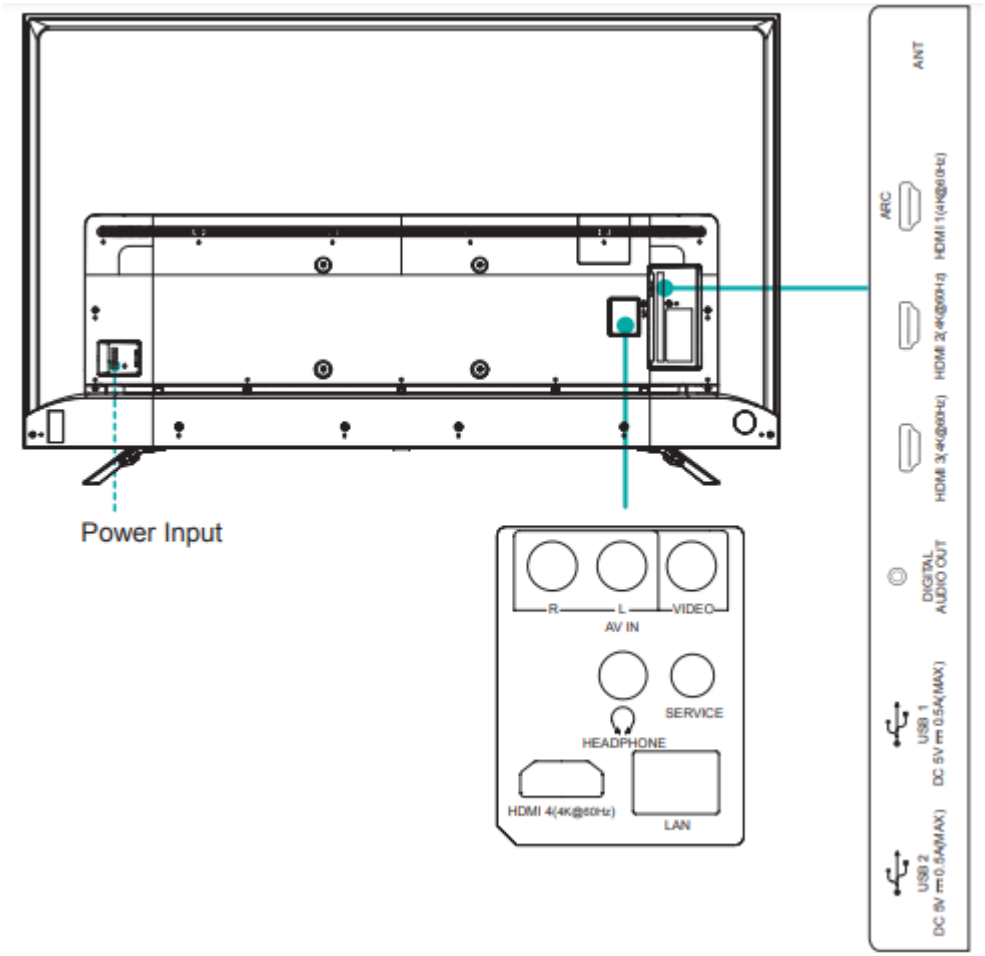

NOTES

- Check the jacks for position and type before making any connections. Loose connections can result in image or color problems. Make sure that all connections are tight and secure.
- The TV may not be compatible with all external devices. To check compatibility, please refer to the user manual of external device.
- Do not connect external equipment while TV's power cord is plugged in. It may cause electric shock.
- Service jack is not available for you to connect an external device. It can only be used by our factory for testing purposes.

Making Connections

ANT

Connect an outdoor VHF/UHF antenna or cable.

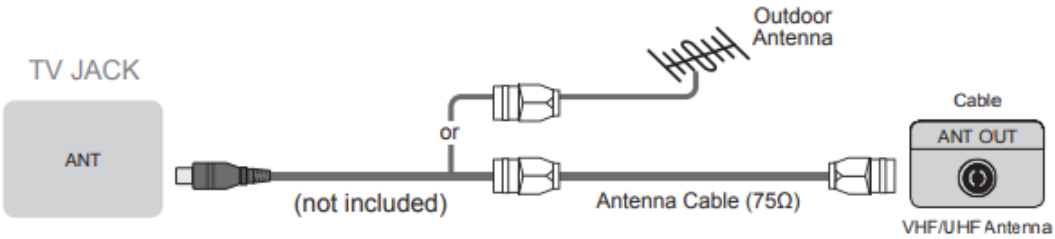

HDMI / AV

Connect a HDMI / AV cable from an external AV equipment. No sound connection is needed for HDMI to HDMI connection. If the signal resolution does not match the specification table, you need to change the setting of device according to the table. Please consult your device user manual for instruction.

- To select the HDMI / AV

Press the [INPUT] button, when the list of input Source appears, press the [/ / < / >] buttons to select the source [HDMI] / [AV], then press the [OK] button to connect.

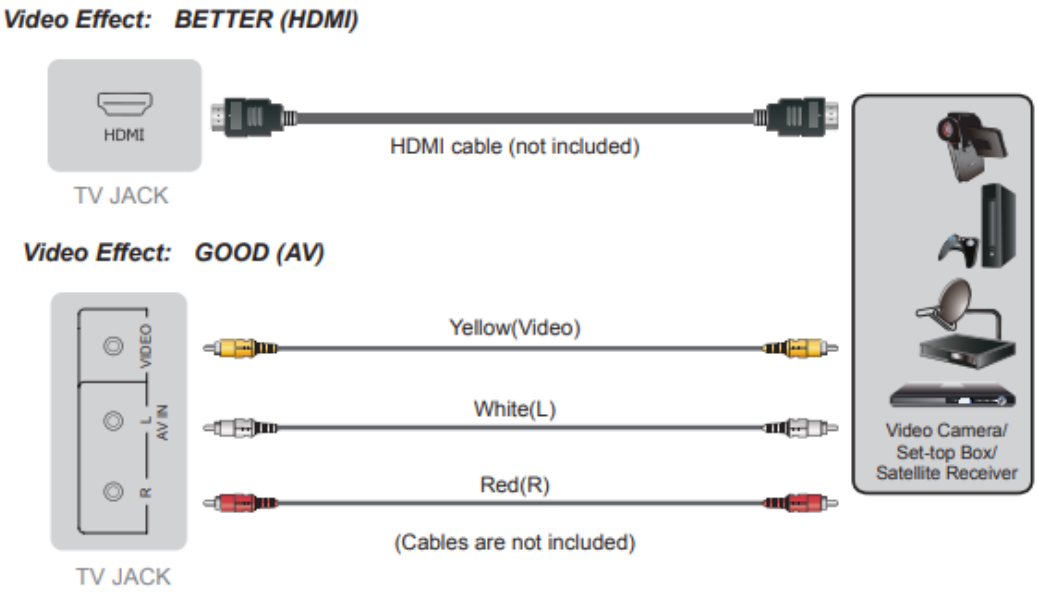

HEADPHONE

Connect Headphone for audio out of the TV.

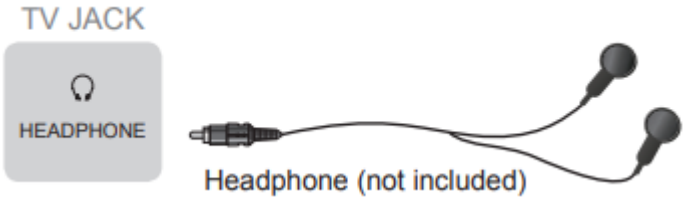

ATTENTION Excessive sound pressure from earphones and headphones can cause hearing loss.

NOTE Please make sure that the headphone you plug in is without microphone function, or it may not be supported.

DIGITAL AUDIO OUT

Connect to an external digital audio system.

Before connecting a digital audio system to the DIGITAL AUDIO OUT jack, you should decrease the volume of both the TV and the system to avoid that the volume suddenly becomes bigger.

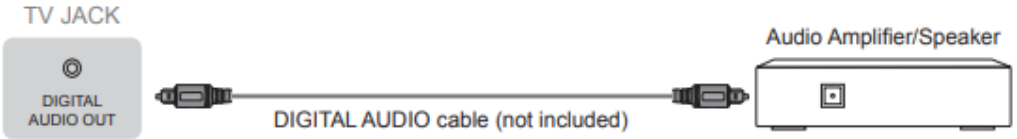

ARC

Connect an HDMI cable from an external digital audio system.

ARC enables the TV to directly output the digital sound through an HDMI cable. Please note that it works only when the TV is connected to the audio receiver that supports the ARC (Audio Return Channel) function.

When this port is used as the ARC function, it can't be used as signal input at the same time.

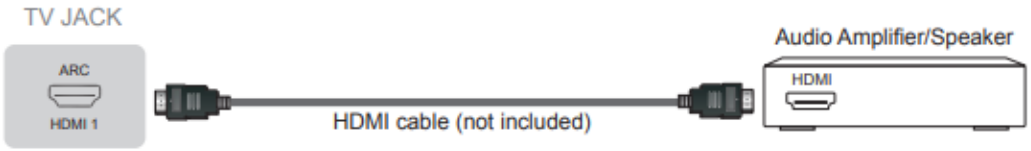

USB

Connect the USB1.1 and USB2.0 devices such as hard drives, USB sticks and digital cameras for browsing photos, listening music and watching movies.

NOTE When connecting a hard disk or a USB hub, always connect the mains adapter of the connected device to the power supply. If a USB 1.1 or USB2.0 device requires more than 500mA or 5V, the USB device may not be supported. Max supported current for USB 3.0 device is 1A (only for some models). Exceeding the max supported current may result in damage or data loss.

LAN (Wired setup)

Connect your TV to your network by connecting the LAN port on the back of your TV to an external modem or router using a LAN (Ethernet/Cat 5) cable. See the illustration below.

- We recommend you to use a modem or router that supports Dynamic Host Configuration Protocol (DHCP). Modems and routers that support DHCP automatically provide the IP address, subnet mask, gateway, and DNS, so you don't have to enter them manually. Most home networks already have DHCP.

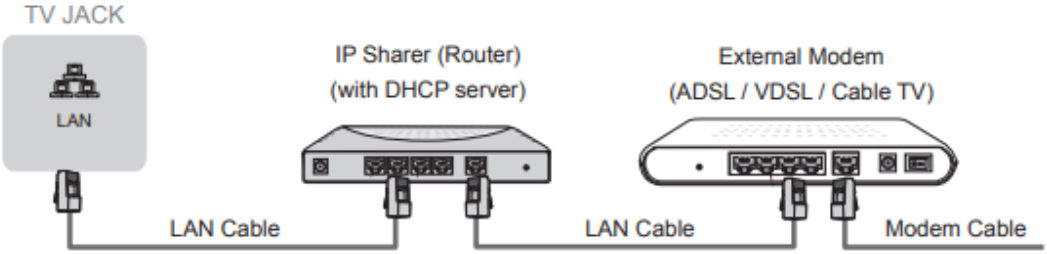

Wireless setup

Connect your TV to your wireless network, you need a wireless router or modem. See the illustration below.

- The TV's built-in Wireless LAN Adapter supports the IEEE 802.11 ac/a/b/g/n communication protocols.

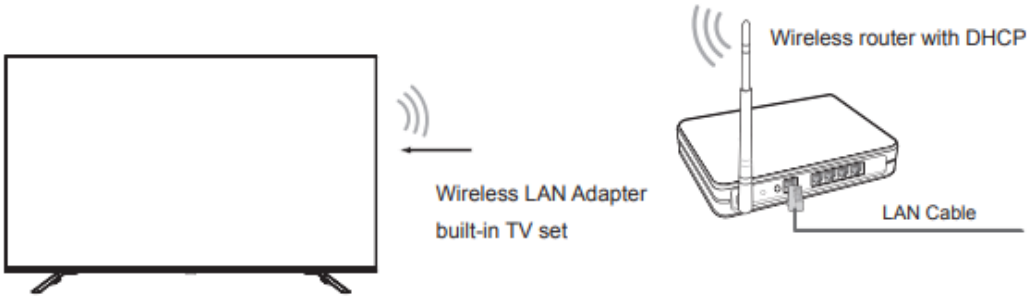

NOTES

- You must use the built-in Wireless LAN Adapter to use a wireless network because the set doesn't support external USB network adapter.
- If the wireless router supports DHCP, your TV can connect more easily to the wireless network.
- If you apply a security system which is not listed below, it will not work with the TV.
- Security system : WPA, WEP, WPA2.

- In order to guarantee smooth network, the distance between router and TV should be less than 10 meters.

Remote Control

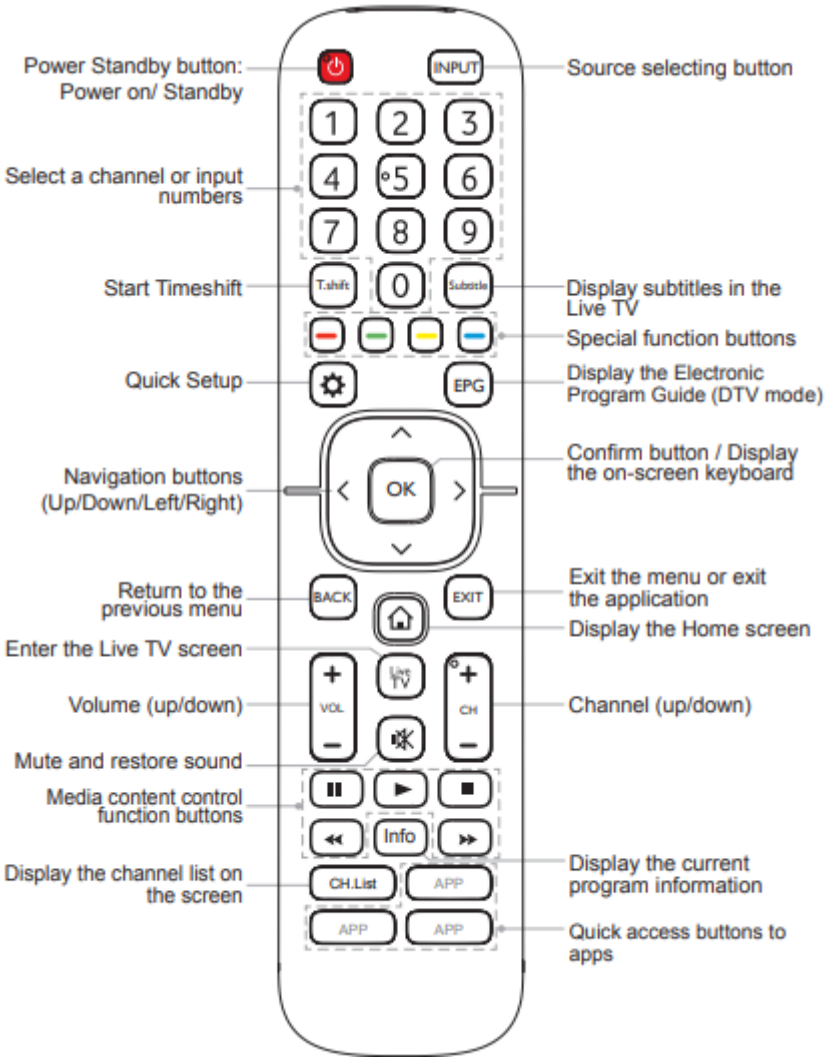

Installing Batteries in the Remote Control

NOTE: Check information according to the actual remote control in the accessory bag.

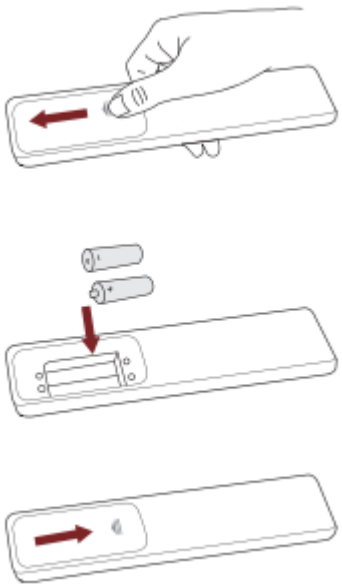

1. Slide the back cover to open the battery compartment of the remote control.
2. Insert two AAA size batteries. Make sure to match the (+) and (-) ends of the batteries with the (+) and (-) ends indicated in the battery compartment.
3. Close the battery compartment with the cover.

NOTES

- Product image is only for reference, actual product may vary in appearance.
- Dispose of your batteries in a designated disposal area. Do not throw the batteries into fire.
- Do not mix battery types or combine used batteries with new ones.
- Remove depleted batteries immediately to prevent battery acid from leaking into the battery compartment.
- If you do not intend to use the remote control for a long time, remove the batteries.
- Batteries should not be exposed to excessive heat, such as sunshine, heat registers, or fire.
- Battery chemicals can cause a rash. If the batteries leak, clean the battery compartment with a cloth. If chemicals touch your skin, wash immediately.

Remote Control Operation Range

1. The remote control can work at a distance of up to 8 meters in front of the TV set.
2. The remote control angle: taking the remote sensor as an apex, 6 meters away, its controlled horizontal angle is within ±30°, while the vertical angle is within ±15°.
3. The operating distance may vary depending on the brightness of the room.

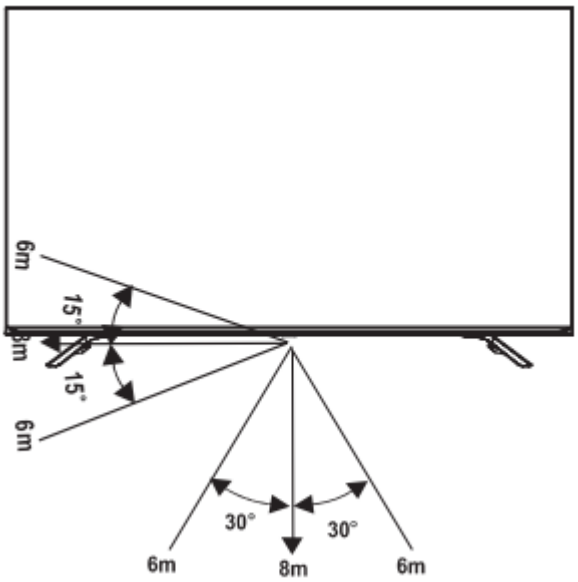

Disposal of this unit

Product should not be damaged, dismantled or thrown in municipal waste.

It should be packed and handed over to authorised re-cycler.

Turning the TV on for the First Time

Turning the TV on for the First Time

1. Connect the mains cable to the mains socket after you have completed all the connections.
2. The first time you turn the TV on, it will go straight into the Installation Guide.
3. Press the [∧ / ∨ / < / >] buttons to navigate the menu and change the settings. Press the [OK] button to confirm.

Language	Select your desired language to be displayed on the menu.
Location	Select the location where you will operate the TV.
Time Zone	Select the local time zone according to your region. (Only available in certain countries)
Network Connection	If your TV does not detect an Ethernet connection, then it will select Wireless automatically, select your network from the list that displays or you can also add a hidden network. When you're done, move to the next screen.
End User License Agreement	Your use of this device and all related services is governed by the End User License Agreement and relative policies. Please review these documents carefully and make sure that you have read and agree to the provisions of the End User License Agreement.

Warning

This content is compiled from multiple sources and is provided for reference purposes only. It may not be complete or fully applicable to all situations. If you are unable to resolve your issue, please contact the product manufacturer or an authorized service provider for official support.

Document generated by ManualsFile