SETTING UP YOUR OVEN

Names of oven Parts and Accessories

Remove the oven and all materials from the carton and oven cavity

Your oven comes with the following accessories:

- Glass tray 1
- Turntable ring 1
- Use & Care Guide 1

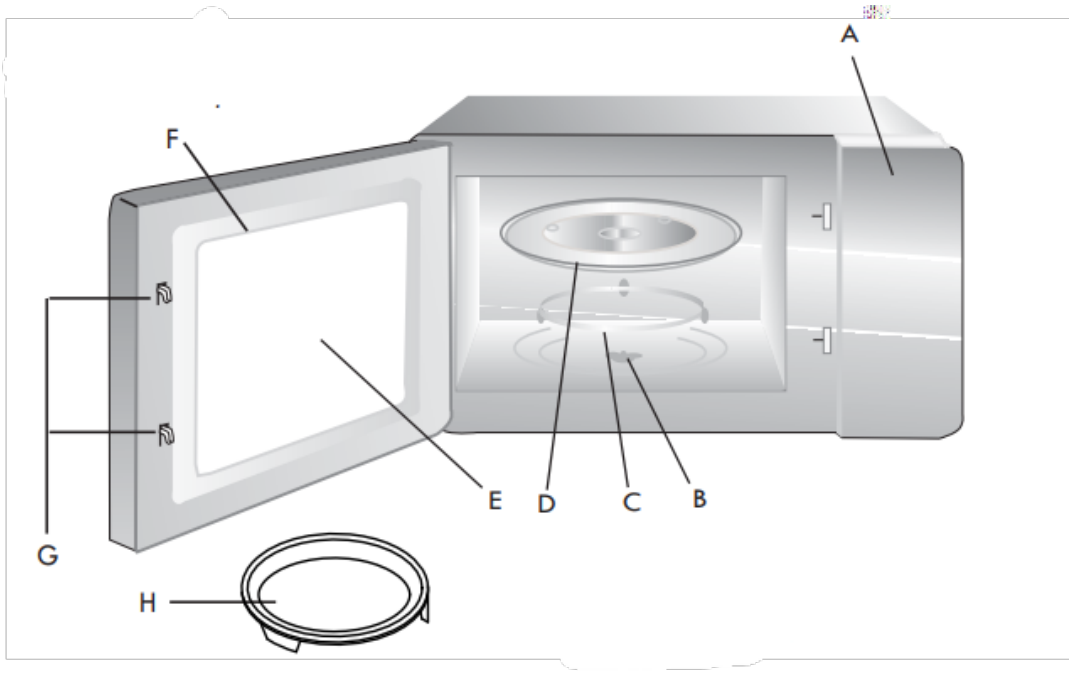

A) Control panel

B) Turntable shaft

C) Turntable ring

D) Glass tray

E) Observation window

F) Oven Door

G) Safety interlock system

H) Grill pan

Grill Pan - Only for use with Convection cooking. Only place grill pan on glass tray.

CAUTION: Do not operate oven with grill pan placed on oven cavity floor. Damage to oven may occur.

Turntable Installation

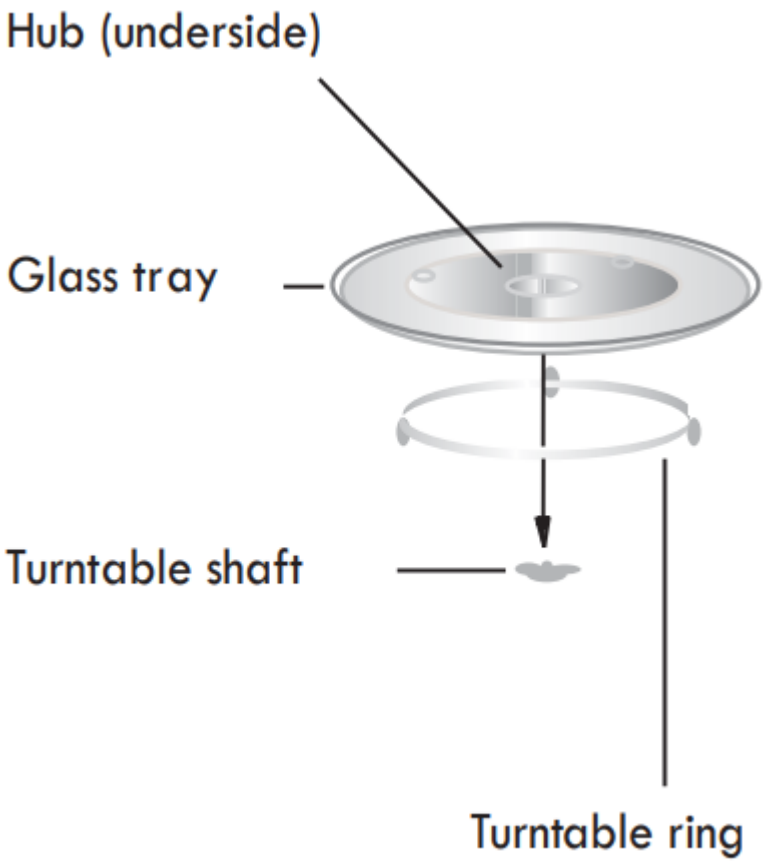

a. Never place the glass tray upside down. The glass tray should never be restricted.

b. Both glass tray and turntable ring must always be used during cooking.

c. All food and containers of food are always to be placed o n the glass tray for cooking.

d. If glass tray or turntable ring cracks or breaks, contact the following customer assistance number: 1-800-657-6119

Countertop Installation

Remove all packing material and accessories. Examine the oven for any damage such as dents or broken door. Do not install if oven is damaged.

Cabinet: Remove any protective film found on the microwave oven cabinet surface.

Do not remove the light brown Mica cover that is attached to the oven cavity to protect the magnetron.

Installation

1. Select a level surface that provide enough open space for the intake and/or outlet vents.

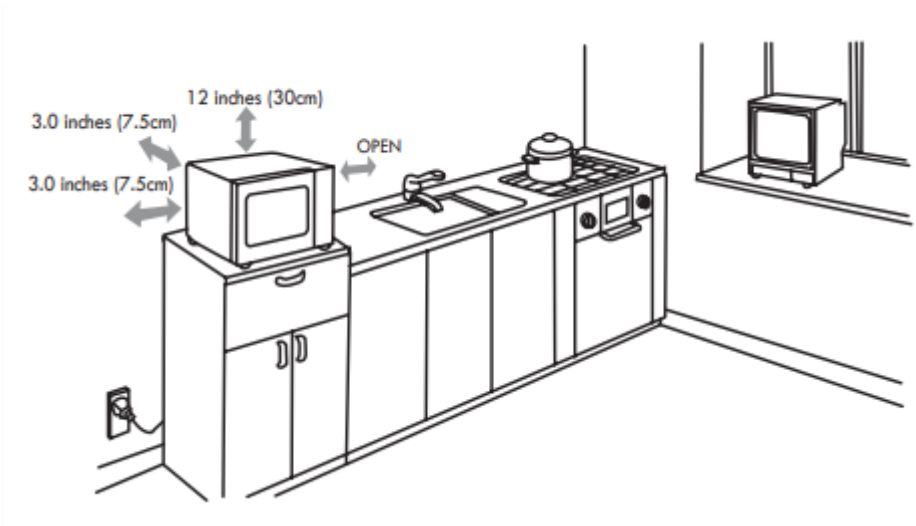

A minimum clearance of 3.0 inches (7.5cm) is required between the oven and any adjacent walls. One side must be open.

(1) Leave a minimum clearance of 1 2 inches (30cm) above the oven.

(2) Do not remove the legs from the bottom of the oven.

(3) Blocking the intake and/or outlet openings can damage the oven.

(4) Place the oven as far away from radios and TV as possible.

Operation of microwave oven may cause interference to your radio or TV reception.

2. Plug your oven into a standard household outlet. Be sure the voltage and the frequency is the same as the voltage and the frequency on the rating label.

WARNING: Do not install oven over a range cooktop or other heat-producing appliance. If installed near or over a heat source, the oven could be damaged and the warranty would be void.

The accessible surface may be hot during operation.

COOKING COMPARISON GUIDE

This Microwave/Convection Oven provides three types of cooking: Microwave only, Convection only, and Microwave and Convection combined.

	MICROWAVE	CONVECTION	COMBINATION
COOKING METHOD	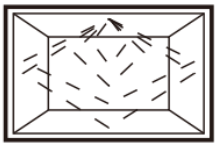 Microwave energy is distributed evenly throughout the oven for fast, thorough cooking of food.	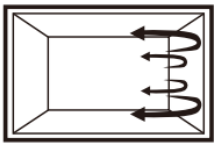 Hot air circulates around food to produce browned exteriors and sealed-in juices.	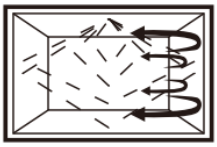 Microwave energy and convection heat combine to shorten the cooking time of regular ovens, while browning and sealing in juices.
HEAT SOURCE	Microwave energy.	Circulating heated air.	Microwave energy and circulating heated air.
BENEFITS	• Fast, high efficiency cooking. • Oven and surroundings do not get hot. • Easy clean-up.	• Aids in browning and seals in flavor. • Cooks some foods faster than regular ovens.	• Shortened cooking time from microwave energy. • Browning and crisping from convection heat.

OPERATION

Control Panel and Features

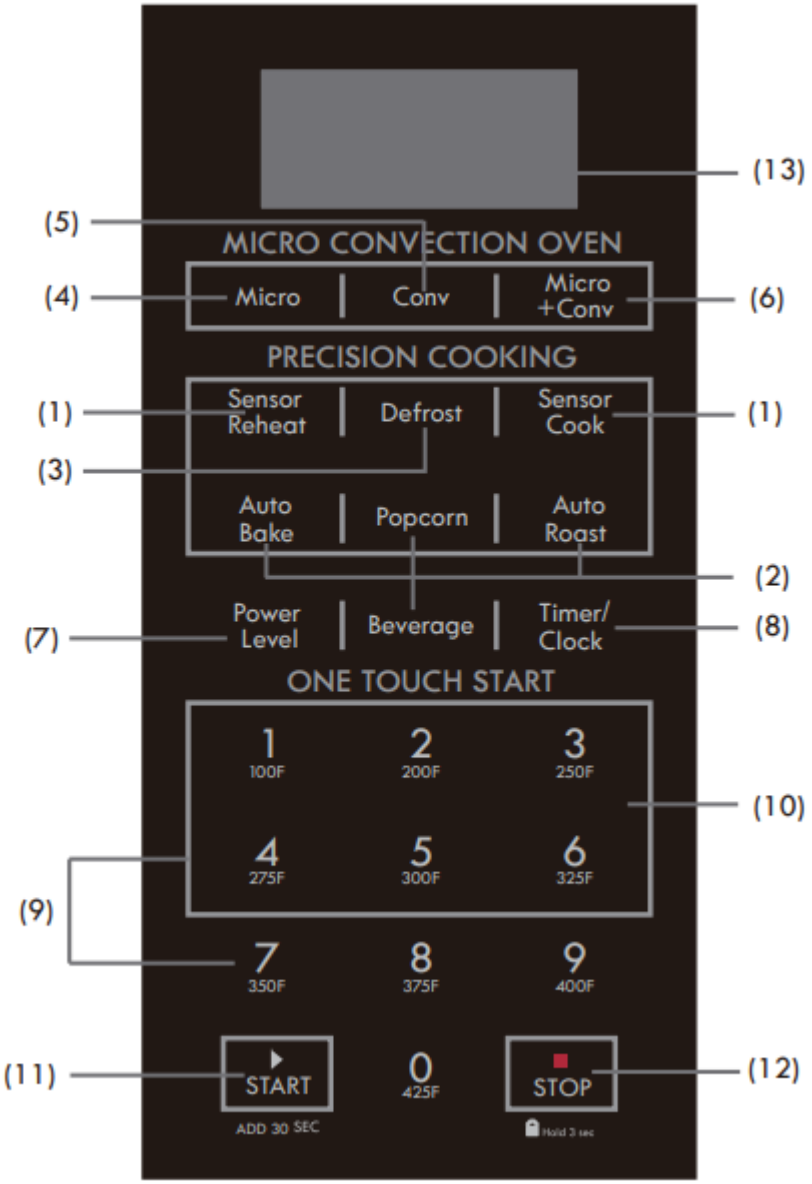

1. **Sensor Menu** (Sensor Reheat, Sensor Cook) Sensor Menu items automatically program cooking time and power based on sensor a ssessment of the amount of steam emitted from food early in the cooking cycle.
2. **Auto Menu** (Auto Bake, Auto Roast, Popcorn, Beverage) Auto Menu items allow you to easily program cooking time based on food quantity.
3. **Defrost**: Defrost time calculated by entered weight and category of item.
4. **Micro** - Press for Microwave only cooking
5. **Conv -** Press for Convection only cooking

6. **Micro + Conv -** Press for combined Microwave + Convection cooking
7. **Power Level**
8. **Timer/Clock**
9. **Number Pads**
10. **ONE TOUCH START Pads (1- 6)**
11. **START/ADD 30 SEC**
12. **STOP/Hold 3 sec:** Before cooking starts, press to clear all previous settings.
    During cooking, press once to stop oven; press twice to stop oven and clear all settings.
    Press pad for 3 seconds to lock or unlock display.
13. **Display Window**

CLOCK SETTING

When the microwave oven is plugged into an outlet, "00:00" will display.

(1) Press **Timer**/**Clock**, "Hr12" and "CLOCK" will appear in the display.

(2) Press the number pads and enter the current clock time. For example, if the time is now 8:30, press "8, 3, 0" in order and "8:30" and "CLOCK" will display.

(3) Press **Timer**/**Clock** to finish clock setting, ":" will flash and the numbers will appear as a clock time in the display.

Note:

(1) In the process of setting clock, if the STOP pad is pressed or if there is no operation within 25 seconds, the display will automatically return to standby mode.

(2) This is a 12 hour clock. If the numbers entered are not within the range between 1:00 to 12:59, the setting will not be accepted until valid numbers are entered.

TIMER

(1) Press the **Timer**/**Clock** twice, "00:00" and "TIMER" will display.

(2) Press the number pads to enter the time amount. The maximum amount of time that can be entered is 99 minutes 99 seco nds.

(3) Press START to confirm setting.

(4) When the time amount elapses, you will hear a long beep.

Note:

1) The Timer setting is different from the Clock setting; it is simply a timer.

2) The Timer function can be used in any cooking process.

3) You can check the timer during the timing process for 5 seconds by pressing **Timer/Clock** once. You can cancel the timing process by pressing STOP during the 5 seconds the timer is displayed.

MICROWAVE COOK

1. Press Micro, "00:00" and "MICRO" will appear in the display.
2. Press number pads to enter the cooking time; the maximum cooking time is 99 minutes and 99 seconds.
3. Press Power Level ; PL10 and MICRO will display. This is the default power of 100%. Press number pads 0 through 9 to select a different power level if desired. See the Power Level table below.
4. Press START to start cooking, system starts to count down.

Example: To cook the food with 50% microwave power for 15 minutes.

a. Press Micro, "00:00" and "MICRO"display.

b. Press "1, 5, 0, 0" in order for 15:00 to appear in the display.

c. Press Power Level , then press "5" to select 50% microwave power.

d. Press START to start cooking, system starts to count down.

Note: In the process of setting, if the STOP pad is pressed or if there is no operation within 25 seconds, the oven will automatically return to display the clock time

STANDING TIME

"Standing time" means that after the timed cooking period ends, food should be allowed to stand either inside or outside the oven to completely finish cooking. Outside oven standing time will allow the oven to be available for other use.

POWER LEVEL

Ten power levels are available. Prior to cooking, press **Power Level** and "PL10" will display. Adjust the power by pressing a number pad as indicated in the table below.

Level	10	9	8	7	6	5	4	3	2	
Power	100%	90%	80%	70%	60%	50%	40%	30%	20%	10
Display	PL10	PL-9	PL-8	PL-7	PL-6	PL-5	PL-4	PL-3	PL-2	PL

ONE TOUCH START

(1) Instant cooking at 100% power level and 1 to 6 minutes cooking time can be started by pressing number pads 1 to 6.

(2) Instant cooking at 100% power level and 30 seconds cooking time can be started by pressing START Each repeated press will increase cooking time by 30 seconds. The maximum cooking time is 99 minutes, 99 seconds.

Note:

1. Time can also be added in 30 second increments by pressing START during Microwave Cooking.
2. Time cannot be added by pressing START during Defrost, Auto Menu and Sensor Menu functions.

DEFROST FUNCTION

(1) Press **Defrost,** "DEF" and "dEF1" will appear in the display.

Press the same pad repeatly, "dEF1", "dEF2", "dEF3" will display in order.

LED display	dEF1	dEF2	dEF3
Food	Meat	Poultry	Fish

(2) Press number pads to enter the weight to be defrosted. Enter the weight with LB first and then with OZ. The "LB" or "OZ" will display accordingly.

Input the weight range between 1oz to 5 Lbs.

If the weight input is not between 1oz to 5 Lbs, the input will be invalid. The oven will not operate until valid numbers are entered.

(3) Press START to start defrosting and the cooking time remaining will be displayed.

Note: When two-thirds of the defrost time passes, the oven will pause defrost and beep twice to remind you to turn over the food. Turn over food, close door and press START to resume defrost cycle. If START isn't pressed, the oven will continue to display the remaining time without resuming the defrost cycle.

COMBINATION FUNCTION (Microwave + Convection)

(1) Press Micro + Conv, "CONV" and "MICRO" will appear in th edisplay.

(2) Press number pads 1through 4 to choose cooking temperature. Temperature selections (°F): 1 = 100, 2 = 275, 3 = 350, 4 = 425. Thecorresponding temperature, "F", "CONV" and "MICRO" will display.

(3) Press number pads to enter the cooking time. The maximum cooking time is 99 minutes, 99 seconds.

(4) Press START to start cooking. The remaining cook time will display. You can check the selected temperature by pressing MICRO + CONV during cooking.

Note: When using the convection function, you should place grill pan on the glass tray.

SENSOR MENU (Sensor Reheat, Sensor Cook)

CAUTION: DO NOT consume foods immediately after the oven finishes cooking. Heated foods, especially pizza, may burn your mouth. Allow foods to cool to a safe eating temperature.

(1) Place the food in the oven and close the door. Press the appropriate Sensor Menu item pad, and the oven will start immediately.

(2) For Sensor Reheat or Sensor Cook function, press the corresponding pad repeatedly to select the menu code. The sensor cooking process starts immediately. When the released steam is detected by the oven, the remaining cooking time will appear in the display. The oven beeps 4 times when cooking is finished and END will display.

Note:

(1) For best sensor cooking results:

a. The room temperature cannot be over 95°F.

b. The weight of food must be more than 4 oz (11 0g).

c. The oven cavity, glass tray and utensils must be dry.

(2) During cooking:

a. The food can be covered, but the cover or lid must be vented with a hole to allow steam to escape.

b. Do not open door or pressing STOP at any time during sensor cooking, or will stop the cooking process and return the oven to standby mode.

c. While using the sensor function, the sensor will self analyze. If there is an error, the sensor function will stop working, show "E -5" in the display and beep every 2 seconds until you press STOP pad. This oven will automatically reset the function.

Example: Sensor Reheat Pad

1) After placing food into oven, press **Sensor Reheat** pad and " Sr -1" and "SENSOR" will display.

2) Press the same pad repeatedly, "Sr-1", "Sr-2", "Sr-3" and "SENSOR" will display in order. When your choice is in the display, wait a moment for "SENS" and "SENSOR" to display, and cooking will start. Oven beeps 4 times when cooking is finished.

Note:

1) Food to be avoided in sensor reheating.

a. Bread and other dry food, such as biscuits or cake.

b. Raw or uncooked food.

c. Beverage and Frozen food.

2) The food can be covered, but the cover or lid must be vented with a hole to allow steam to escape.

3) The foodtemperature must be at least 40°F when placing it into the oven for Sensor Heat to work correctly.

Sensor Reheat Menu:

Menu button	Sensor Reheat	Sensor Reheat	Sensor Reheat
Food	Dinner Plate	Soup/ Sauce	Casserole
Food Code	Sr-1	Sr-2	Sr-3
Weight	7-28 oz	7-21oz	7-28oz

Example: Sensor Cook Pad

1) After placing food into oven, press Sensor Cook pad and "SC-1" and "SENSOR" will appear in the display.

2) Press the same pad repeated y, "SC-1" to “SC-8” and "SENSOR" will display in order. When your choice is in the display, wait a moment for "SENS" and "SENSOR" to display, and cooking will start. Oven beeps 4 times when cooking is finished.

Sensor Cook Menu:

Food	Display	Weight/Portion
Potato	SC-1	7-32 oz (1-3 potatoes)
Fresh Vegetable	SC-2	7-21 oz
Frozen Vegetable	SC-3	7-21 oz
Frozen Entree	SC-4	7-21 oz
Rice	SC-5	5-16 oz
Ground Meat	SC-6	7-21 oz
Fish/Seafood	SC-7	7-21 oz
Frozen Pizza	SC-8	5-16 oz (1-3 pcs)

POPCORN

(1) Place a 3.2 oz package of popcorn in oven and close door. Press **Popcorn** pad and cooking starts immediately. Remaining time will display with "AUTO". Oven beeps 4 times when cooking is finished.

(2) Follow package instructions, using Microwave Cook if the package is less than 3.2 oz or larger than 3.2 oz. Place the package of popcorn in the center of the microwave.

BEVERAGE

Press **Beverage** pad, "1" and "AUTO" will display. Press **Beverage** pad repeatedly, "1", "2", "3" cup will display in order. When your choice is in the display, wait a moment for the oven to start cooking. Oven beeps 4 times when cooking is finished.

AUTO BAKE FUNCTION

(1) Press Auto Bake, "Ab-1" and "AUTO" will display.

(2) Press **Auto Bake** repeatedly to choose the menu. See Auto Bake table below.

(3) Press number pad to enter weight or portions. For Ab-1, press number pad 1 through 3 to choose weight. For Ab-2, Ab-3, Ab-4, press number pad 1 to choose the weight or portion.

(4) Press START to start cooking.

Auto Bake Menu:

Food	Display	Weight / Portion
Frozen Pizza	Ab-1	5 oz/11 oz/16 oz (1 pc/2 pcs/ 3 pcs)
Muffins	Ab-2	6 muffin cups
Biscuit/Dinner Roll/Bread Stick	Ab-3	8 oz/(4 pcs)
Frozen French Fries	Ab-4	8 oz/bag

CAUTION: Do not consume foods immediately after oven finishes cooking. Heated foods, especially pizza, may burn your mouth.

Allow foods to cool to a safe eating temperature.

When using the convection function, only place the grill pan on the glass tray.

AUTO ROAST FUNCTION

(1) Press **Auto Roast**, "Ar-1" and "AUTO" will display.

(2) Press **Auto Roast** repeatedly to choose the menu. See Auto Roast table below.

(3) Press number pad to enter weight or portions.

(4) Press START to start cooking.

Auto Roast Menu:

Food	Display	Weight / Portion
Beef	Ar-1	7 oz/14 oz/21 oz
Whole Chicken	Ar-2	28 oz/35 oz/42 oz/50 oz
Turkey Breasts	Ar-3	7 oz/14 oz/21 oz (1 pc/2 pcs/3 pcs)
Pork Chops	Ar-4	7 oz/14 oz/21 oz

CAUTION: When using the convection function, only place the grill pan on the glass tray.

COOKING END REMINDER FUNCTION

The oven will beep 4 times to alert the user that cooking time has ended. "End" will display.

The time of day will display by opening the door or pressing STOP pad.

LOCK FUNCTION

To lock the microwave so that it cannot be operated by children or other unintended users, press STOP pad for 3 seconds. You will hear a long beep. If the clock has been set, "LOCK" will display for 3 seconds and then disappear. To check, press any pad and "LOCK" will again display for 3 seconds and disappear.

To Unlock, press STOP for 3 seconds, you will hear a long beep and "LOCK" will disappear.

AUTOMATIC PROTECTION MECHANISM

When the oven cavity temperature becomes greater than 482°F during cooking, the oven enters into super high temperature protection status. The digital display will show "E01" and will beep once a second until is STOP pressed, and the oven will then display the clock time. Oven should reset for further use. If error code shows a second time, call 1-800-657-6119 for customer assistance.

If the oven cavity temperature is less than 77°F after running continuously for 5 minutes in Convection or Combination cooking, the oven enters into super low temperature protection status.

The digital display will show "E02" and will beep once a second until STOP is pressed, and the

oven will then display the clock time. Oven should reset for further use. If error code shows a second time, call 1-800-657-6119 for customer assistance.

Maintenance

Troubleshooting

Check your problem by using the chart below and try the solutions for each problem. If the microwave oven still does not work properly, contact the following number for customer assistance: 1-800-657-6119.

TROUBLE	POSSIBLE CAUSE	POSSIBLE REMEDY
Oven will not start	a. Electrical cord for oven is not plugged in. b. Door is open. c. Wrong operation is set.	a. Plug into the outlet. b. Close the door and try again. c. Check instructions.
Arcing or sparking	a. Materials to be avoided in microwave oven were used. b. The oven is operated when empty. c. Spilled food remains in the cavity.	a. Use microwave-safe cookware only. b. Do not operate with oven empty. c. Clean cavity with wet towel.
Unevenly cooked foods	a. Materials to be avoided in microwave oven were used. b. Food is not defrosted completely. c. Cooking time, power level is not suitable. d. Food is not turned or stirred.	a. Use microwave-safe cookware only. b. Completely defrost food. c. Use correct cooking time, power level. d. Turn or stir food.
Overcooked foods	Cooking time, power level is not suitable.	Use correct cooking time, power level.
Undercooked foods	a. Materials to be avoided in microwave oven were used. b. Food is not defrosted completely. c. Oven ventilation ports are restricted. d. Cooking time, power level is not suitable.	a. Use microwave-safe cookware only. b. Completely defrost food. c. Check to see that oven ventilation ports are not restricted. d. Use correct cooking time, power level.

Improper defrosting	a. Materials to be avoided in microwave oven were used. b. Cooking time, power level is not suitable. c. Food is not turned or stirred.	a. Use microwave-safe cookware only. b. Use correct cooking time, power level. c. Turn or stir food.
Sensor cooked foods not properly cooked	a. Cover or lid on food not vented. b. Door opened before sensor-detected cooking time appears in display.	a. Cover or lid over food must contain vent hole for escaping steam. b. Do not open door to stir or turn food before sensor-detected cooking time appears in display.

Warning

This content is compiled from multiple sources and is provided for reference purposes only. It may not be complete or fully applicable to all situations. If you are unable to resolve your issue, please contact the product manufacturer or an authorized service provider for official support.

Document generated by ManualsFile