BEFORE USING YOUR NEW VACUUM CLEANER

Please read this guide. It will help you assemble and operate your new Kenmore vacuum cleaner in the safest and most effective way.

For more information about vacuum cleaner care and operation, call the Vacuum Cleaner Help Line at 1-877-531-7321. You will need the complete model and serial numbers when requesting information. Your vacuum cleaner's model and serial numbers are located on the Model and Serial Number Plate.

Use the space below to record the model number and serial number of your new Kenmore vacuum cleaner.

Model No._____

Serial No. _____

Date of Purchase _____

Keep this book and your sales check (receipt) in a safe place for future reference.

PACKING LIST

Your KENMORE VACUUM CLEANER is packaged with the following parts and components assembled separately in the carton:

- Canister Vacuum Cleaner (with Floor Brush, Dusting Brush, and Crevice Tool)
- PowerMate®
- Pet PowerMate®
- Handle & Hose Assembly
- Telescoping Wand
- Use & Care Guide

PARTS AND FEATURES

It is important to know your vacuum cleaner's parts and features to ensure its proper and safe use. Review these before using your vacuum cleaner.

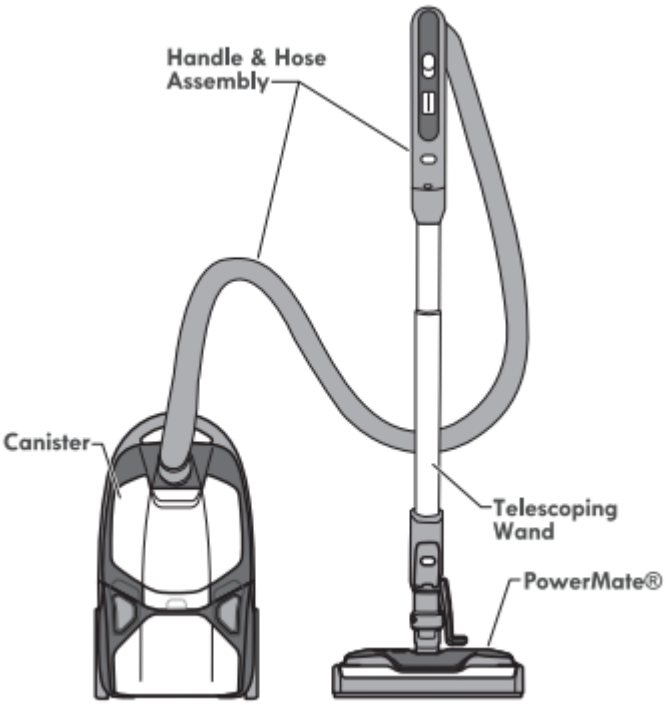

REPLACEMENT PARTS

Part	Part No
Belt	20-53013*
Dust Bag (2-pack)	20-53291*
Dust Bag (6-pack)	20-53292*
Exhaust Filter	20-52730*
Motor Safety Filter	20-81002*
To order a replacement part call 1-844-553-6667 or visit www.searspartsdirect.com * Available online at www.sears.com	

NOTE: Detailed illustrations and listings of all vacuum cleaner parts are also available at searspartsdirect.com

CANISTER

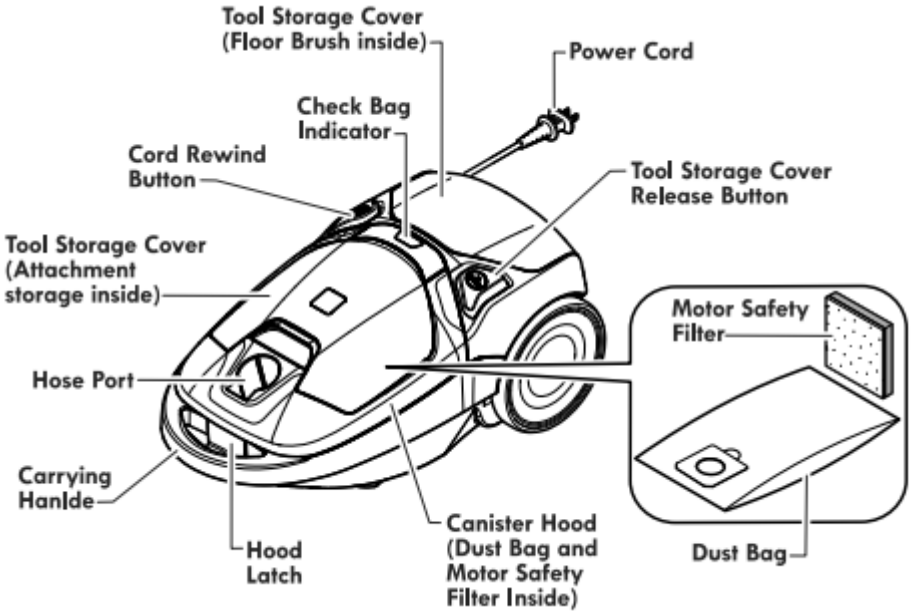

ATTACHMENTS

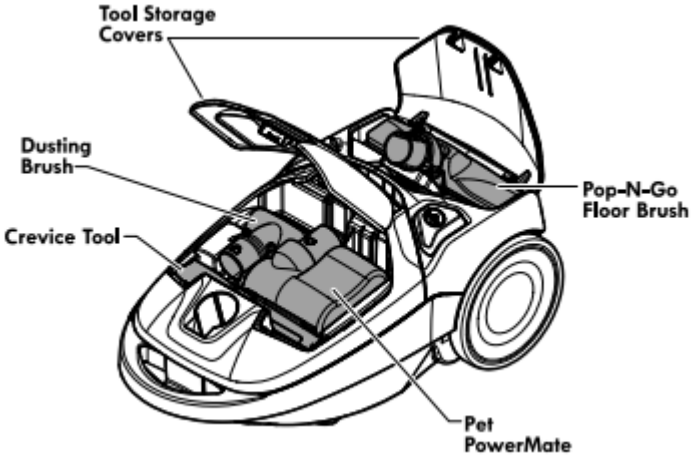

HANDLE & HOSE ASSEMBLY

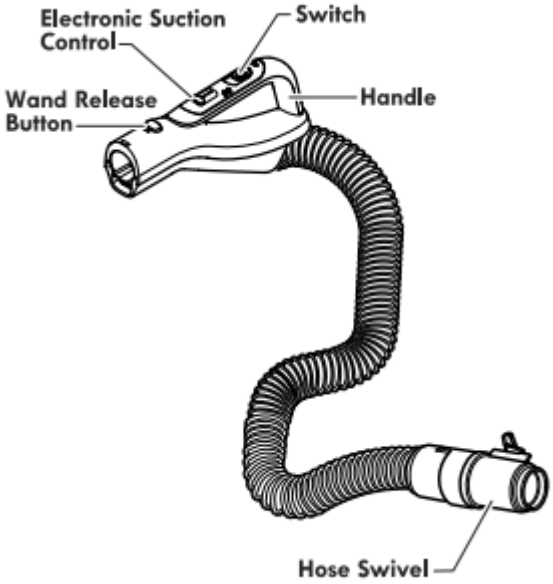

TELESCOPING WAND

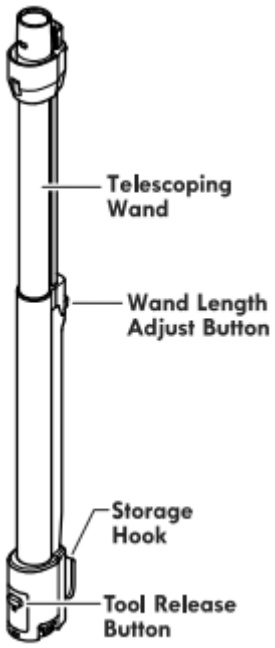

POWERMATE

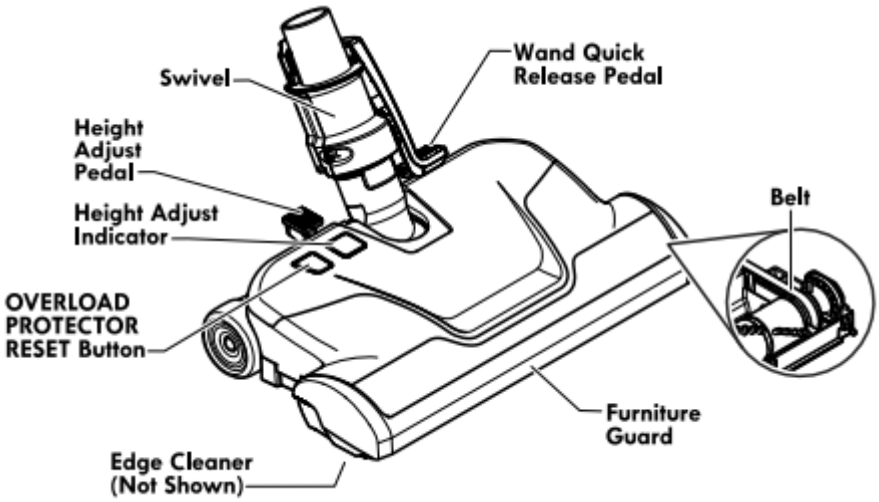

Please pay special attention to these hazard alert boxes, and follow any instructions given. WARNING statements alert you to such dangers as fire, electric shock, burns and personal injury. CAUTION statements alert you to such dangers as personal injury and/or property damage.

ASSEMBLY INSTRUCTIONS

Before assembling vacuum cleaner, check the **PACKING LIST** (page 2). Use this list to verify that you have received and identified all the components of your new Kenmore vacuum cleaner.

WARNING:

Electrical Shock Hazard

DO NOT plug into electrical supply until assembly is complete. Failure to do so could result in electrical shock or injury

POWERMATE

Align wand and insert onto PowerMate until the wand locks into place.

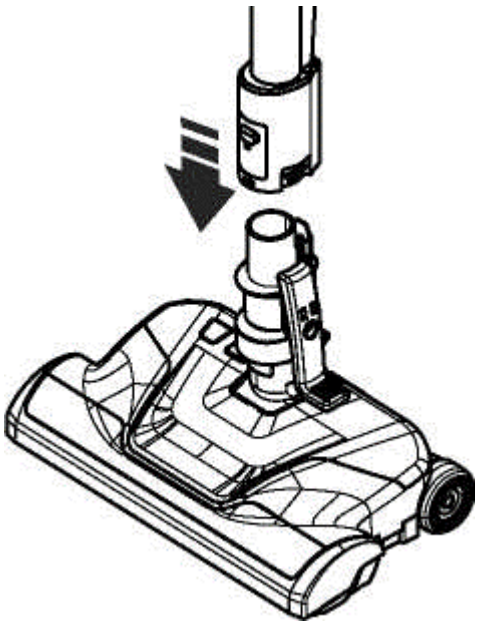

HANDLE ASSEMBLY

Insert wand into handle until lock button snaps in place.

To remove: Press wand release button and pull up on handle.

To store: Disconnect hose from wand and canister to prevent stress on hose during storage. Store hose in a loosely coiled position so the hose covering is not stressed.

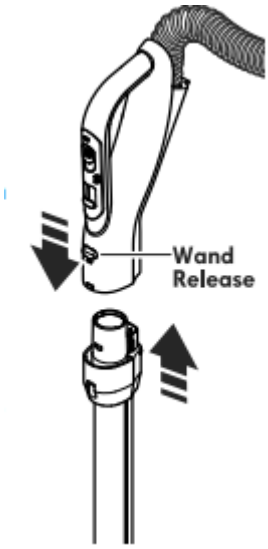

WAND (TELESCOPING)

The wand length is adjustable and requires no assembly. To adjust, simply push on the wand adjust button and slide the upper wand to the desired height.

NOTE: When adjusting the wand length you may have to hold the PowerMate with your hand or foot.

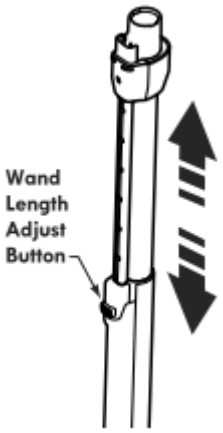

HOSE

1. Line up the hose latch tab and notch in canister hood and insert hose into canister until it snaps into place.

IMPORTANT: Push hose connector firmly into the canister body until the hose latch tab snaps into place. The vacuum cleaner will not operate until hose is fully connected.

To remove: Do not open hood before removing hose. With hood closed, press hose latch tab and remove hose.

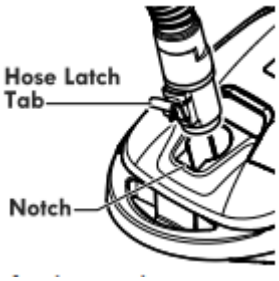

CANISTER

1. Open the canister hood.
2. Check to see that the dust bag is properly installed. See **DUST BAG CHANGING** (page 17) for instructions.
3. Check to see that the motor safety filter is properly installed. See **MOTOR SAFETY FILTER CLEANING** (page 18) for instructions.

OPERATING INSTRUCTIONS

CAUTION: Moving parts! To reduce the risk of personal injury, DO NOT touch the agitator when vacuum cleaner is on. Contacting the agitator while it is rotating can cut, bruise or cause other injuries. Always turn off and unplug from electrical outlet before servicing. Use caution when operating near children.

HOW TO START

WARNING: Personal Injury and Product Damage Hazard

- **ALWAYS** turn off the vacuum cleaner before unplugging.
- The cord moves rapidly when rewinding. Keep children away and provide a clear path when rewinding the cord to prevent personal injury.
- **DO NOT** use outlets above counters. Damage from cord to items in surrounding area could occur.
- When any abnormality/failure occurs, stop using the product immediately and disconnect the power plug.

NOTE: To reduce the risk of electric shock, this vacuum cleaner has a polarized plug; one blade is wider than the other. This plug will fit in a polarized outlet only one way. If the plug does not fit fully in the outlet, reverse the plug. If it still does not fit, contact a qualified electrician to install the proper outlet. Do not change the plug in any way

WARNING: Personal Injury and Product Damage Hazard

- **DO NOT** run over power cord with PowerMate. Personal injury or product damage could result.
- **DO NOT** pull plug from wall by the power cord. If there is damage to the cord or plug, personal injury or property damage could result.

1. Pull cord out of canister to desired length. The cord will not rewind until the cord rewind button is pushed.

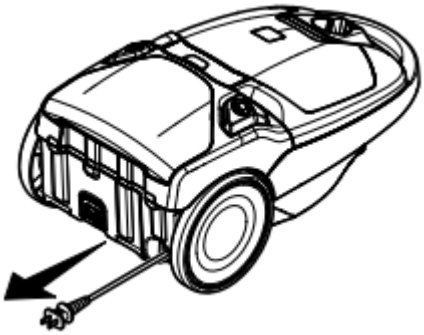

2. Plug the polarized power cord into a 120 Volt outlet located near the floor.

To rewind: Turn off and unplug the vacuum cleaner. Hold the plug while rewinding to prevent damage or injury from the moving cord. Push cord rewind button.

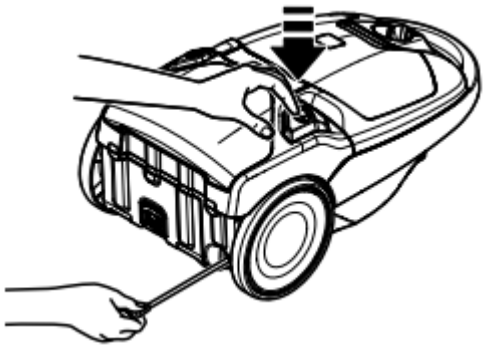

3. Lower wand from upright position by pressing on the **HANDLE RELEASE** pedal.

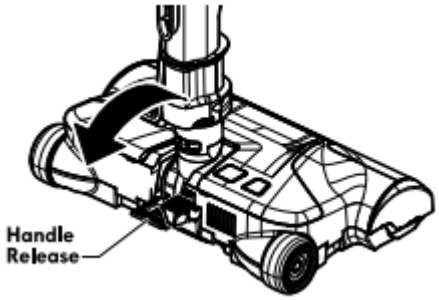

4. Select a pile height setting by pressing the height adjust pedal on the rear of the PowerMate. The pile height setting shows on the indicator.

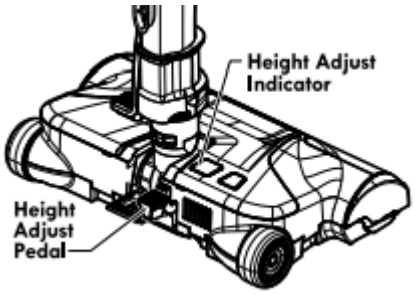

5. Select a position on the handle three-way On/Off switch.

OFF Turns vacuum cleaner off.

HARDFLOOR Turns on the canister motor only.

CARPET Turns on both the canister and the PowerMate motors. Agitator will come on.

SUGGESTED PILE HEIGHT SETTINGS

Attention: Refer to your carpet manufacturers cleaning recommendations. Some more delicate carpets may require that they be vacuumed with the PowerMate agitator turned off to prevent carpet damage.

For best deep down cleaning, use the **XLO** setting. However, you may need to raise the height to make some jobs easier, such as scatter rugs and some deep pile carpets, and to prevent the vacuum cleaner from shutting off. Suggested settings are:

HI – Shag, deep pile, super-soft, or ultraplush carpets, and scatter rugs.

MED – Medium to deep pile.

LO – Low to medium pile.

XLO – The preferred setting for many carpets and also for bare floors.

NOTE: To protect bare floors, place the 3- way On/Off switch in the HARDFLOOR position to turn off agitator rotation.

CAUTION: DO NOT leave the PowerMate running in one spot for any length of time. Damage to carpet may occur

CAUTION:

Product Damage Hazard

Use care if the PowerMate and wand is left in the upright position as it may tip over easily. Property damage can occur if tipped.

VACUUMING TIPS

FOR BEST CLEANING RESULTS

- Use high power on the suction control located on the handle.

- Keep the airflow passage open. Check each assembly area in **REMOVING CLOGS** (page 16) occasionally for clogs. Turn off and unplug vacuum cleaner from outlet before checking.

STAIRS

WARNING:

Personal Injury Hazard

Use care if canister is placed on stairs. It may fall, causing personal injury or property damage.

CAUTION:

Product Damage Hazard

Do not pull on the hose to move the canister from one stair to the next. When finished cleaning in one area use the handle grip on the canister to move the vacuum cleaner to a new location for further cleaning.

The stair grip located on lower body of the canister will aid in preventing the canister from slipping when used on stairs.

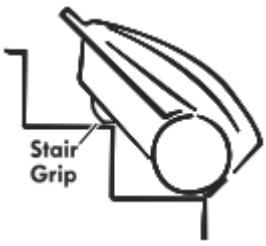

NOTE: Before using, be sure the canister is balanced on stairs as shown and that the stair grip has engaged a step.

SUGGESTED SWEEPING PATTERN

For best cleaning action, the PowerMate should be pushed straight away from you and pulled straight back. At the end of each pull stroke, the direction of the PowerMate should be

changed to point into the next section to be cleaned. This pattern should be continued across the carpet with slow, gliding motions.

NOTE: Fast, jerky strokes do not provide complete cleaning.

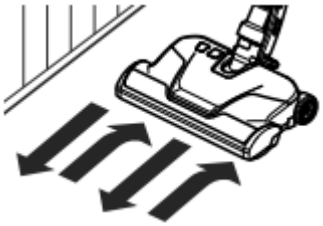

EDGE CLEANER

Active brush edge cleaners are on both sides of the PowerMate. Guide either side of the PowerMate along base-boards or next to furniture to help remove dirt trapped at carpet edges.

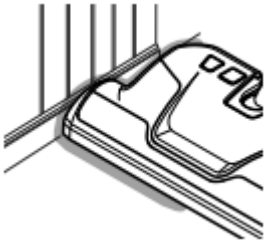

POWERMATE STORAGE

The wand has a “U” shaped storage hook that slides into the “U” shaped slot on the canister. The storage hook allows the wands and PowerMate to be stored with the canister to conserve storage space. The canister must be stored on end for this feature to be used.

To attach the PowerMate, it must be in the flat position. Use the handle release pedal to place it in this position. The wand will slip out of the slot as it is lifted up for use and will slide into the slot as it is lowered for storage.

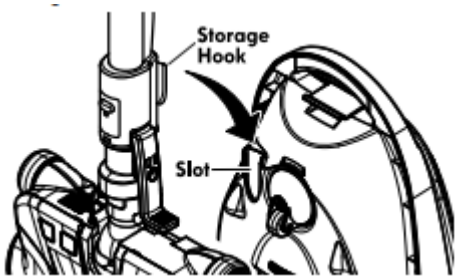

ATTACHMENTS

CAUTION: DO NOT attach or remove handle or wands while vacuum cleaner is ON. This could cause sparking and damage the electrical contacts or electronic controls.

ATTACHMENT STORAGE

This canister is equipped with an on-board storage area for attachments.

POP-N-GO FLOOR BRUSH

1. Press the release button to open the tool storage cover. The neck of the floor brush will pop up at an angle that makes it easy to attach the wand.

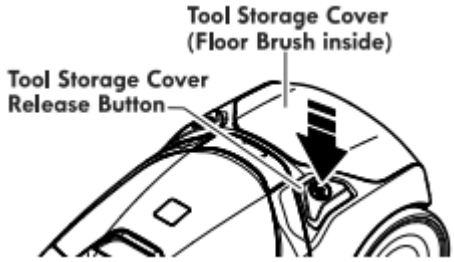

2. Push the wand collar over the floor brush neck. Tilt wand upward and lift out.

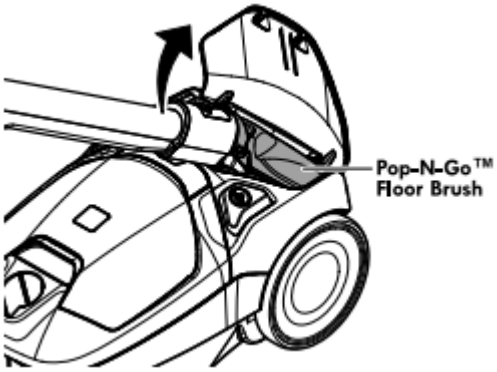

NOTE: If there is difficulty attaching brush to wand in the manner described above, simply remove the brush from storage compartment and insert it into the wand collar.

TO REINSTALL:

1. With the floor brush on the wand, insert the floor brush into place.

2. Tilt the wand and floor brush downward.

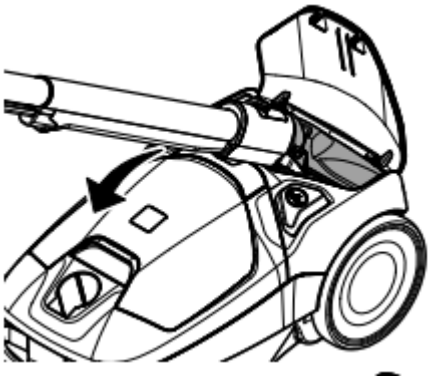

3. Pull the wand away from the floor brush. The floor brush will disconnect from the wand.

4. Close the tool storage cover securely

NOTE: If there is difficulty detaching the wand from brush in the manner described above, simply press the Tool Release button to disconnect brush from wand.

DUSTING BRUSH, CREVICE TOOL, & PET POWERMATE

1. Lift the tool storage cover to open.

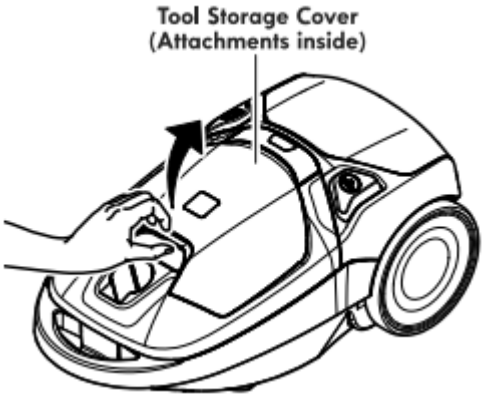

2. Remove attachment as needed. See **ATTACHMENT USE TABLE** (page 14).

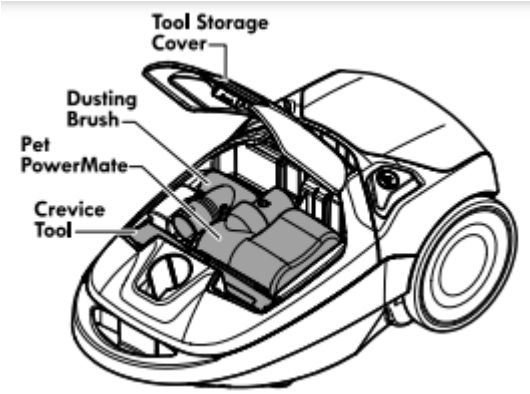

TO REINSTALL:

Insert the attachment, press down into place, and close the tool storage cover securely.

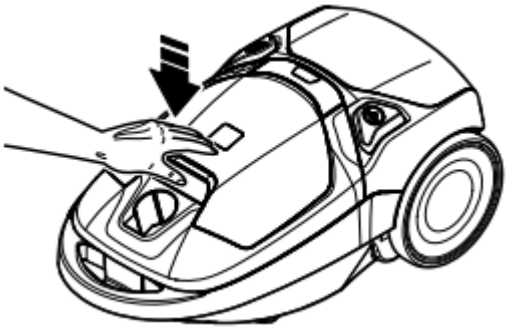

ATTACHMENTS ON HANDLE

NOTE: If the PowerMate is attached, turn vacuum cleaner off before removing handle from wand.

1. Press wand release button and pull up on handle.

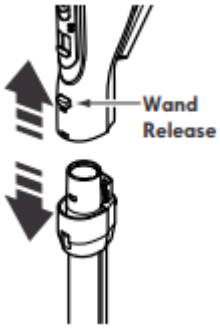

2. Slide attachments into handle as needed. All except crevice tool will click into place. See **ATTACHMENT USE TABLE** (page 14).

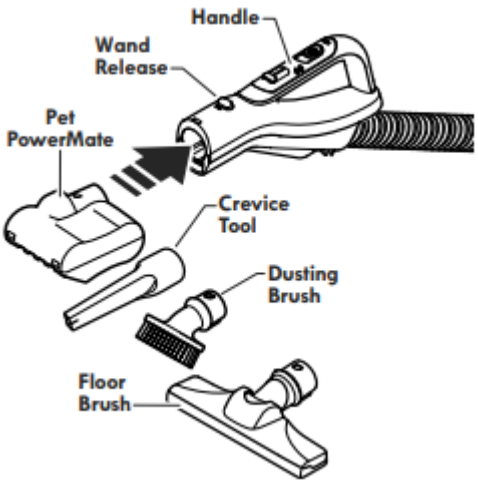

NOTE: To remove Pet PowerMate, dusting brush, and/or floor brush, press the Wand Release button and slide out.

ATTACHMENTS ON WAND

1. To remove wand from PowerMate, lock wand in upright position.

2. Press wand release pedal with foot and pull the wand straight up and out of PowerMate.

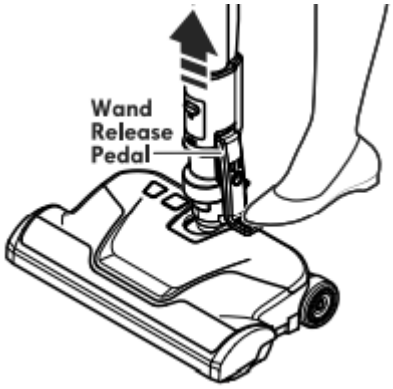

3. Slide attachments into wand as needed. All except crevice tool will click into place. See **ATTACHMENT USE TABLE** (page 14).

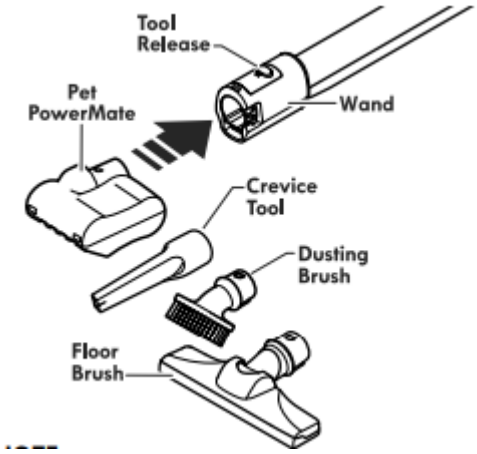

NOTE: To remove Pet PowerMate, dusting brush, and/or floor brush, press the press the tool release button and slide out.

ATTACHMENT USE TABLE

	CLEANING AREA						
ATTACHMENT	Furniture[1]	Between Cushions[1]	Drapes[1]	Stairs	Bare Floors	Carpeted Floors/Rugs	Walls
Dusting Brush	✔		✔				✔
Crevice Tool	✔	✔					
Floor Brush				✔	✔		✔
PowerMate					✔ 2	✔	
Pet PowerMate [3]	✔			✔			

1. Always clean attachments before using on fabrics.
2. 3-way On/Off switch should be in HARD FLOOR position.
3. Pet PowerMate attachment instructions are included with the product.

WARNING: NEVER use the Pet PowerMate directly on pets, as it may cause injury. The Pet PowerMate is only designed to vacuum pet hair that is shed on stairs or furniture.

PERFORMANCE/SAFETY FEATURES

WARNING

Personal Injury Hazard

To avoid accidental agitator starting, always turn off and unplug the vacuum cleaner before cleaning the agitator area. Failure to do so can result in personal injury.

OVERLOAD PROTECTOR

The PowerMate has built-in protection against motor and belt damage should the agitator jam. If the agitator slows down or stops, the overload protector shuts off the PowerMate. The canister motor will continue to run.

To correct problem: Turn off and unplug vacuum cleaner, remove obstruction, then press **OVERLOAD PROTECTOR RESET** button.

If the problem persists, have the vacuum cleaner serviced by a Sears or other qualified service agent.

ELECTRONIC SUCTION CONTROL

The electronic suction control allows you to change the power of the vacuum cleaner suction motor.

Increase suction for upholsteries, carpets, and bare floors.

Decrease suction for draperies and lightweight rugs.

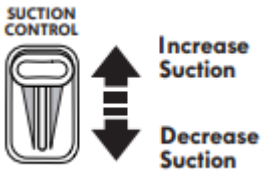

CHECK BAG INDICATOR

When the vacuum cleaner is running with normal airflow, the light on the **CHECK BAG** indicator is off. The light comes on whenever the airflow becomes blocked. If that occurs, check the disposable dust bag, motor safety filter and other possible clog locations shown in **REMOVING CLOGS** (page 16).

To correct problem: See "Check Bag Indicator activates" in **TROUBLESHOOTING** (page 24).

NOTE: The light may come on when using certain attachments due to reduced airflow through attachment.

THERMAL PROTECTOR

This vacuum cleaner has a thermal protector which automatically trips to protect the vacuum cleaner from overheating. If a clog prevents the normal flow of air to the motor, the thermal protector turns the motor off automatically. This allows the motor to cool in order to prevent possible damage to the vacuum cleaner.

To correct problem: Turn off and unplug vacuum cleaner to allow the vacuum cleaner to cool and the thermal protector to reset. Check for and remove clogs, if necessary. Also check and clean or replace any clogged filters. Wait approximately fifty (50) minutes and plug the vacuum cleaner in and turn back on to see if the motor protector has reset.

If the problem persists, have the vacuum cleaner serviced by a Sears or other qualified service agent.

CANISTER CARE

REMOVING CLOGS

The vacuum cleaner creates suction that picks up dirt. Rapidly moving air carries the dirt to the dust bag through the airflow passages. The dust bag lets the air pass through, while it traps the dirt.

For best cleaning results, keep the airflow passage open. Check the starred (★) areas occasionally for clogs. Turn off and unplug vacuum cleaner from outlet before checking.

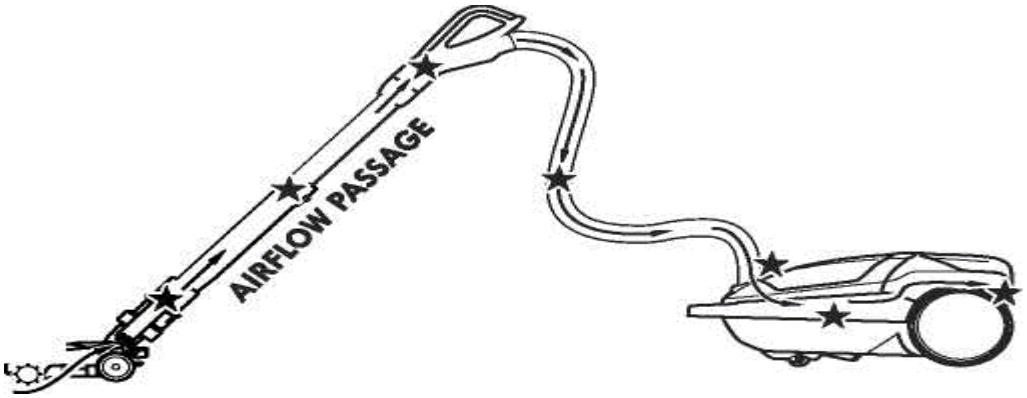

TO CHECK FOR CLOGS:

- Check dust bag and change if full. See **DUST BAG CHANGING** (page 17).

- Check motor safety filter and exhaust filter and clean or replace if dirty. See **MOTOR SAFETY FILTER CLEANING** (page 18) and **EXHAUST FILTER CHANGING** (page 19).
- Check PowerMate for any dirt or debris in the belt path area or in the agitator area. Carefully remove any string or debris located on the agitator or end caps. See **TO CLEAN AGITATOR** (page 21).

If the vacuum cleaner still has poor suction, do the following:

1. Connect the hose to the canister and turn vacuum cleaner on. Check the end of the hose for suction. If there is good suction on the hose handle, there is no clog in the hose. If the suction is bad, remove any dirt or debris in the hose and handle.
2. Connect hose handle to wand. Check the end of the wand for suction. If there is good suction at the end of the wand, there is no clog in the wand. If the suction is bad, remove any dirt or debris in the wand.
3. Check PowerMate swivel. Remove any dirt or debris.

CLEANING EXTERIOR AND ATTACHMENTS

1. Turn off and unplug vacuum cleaner. **DO NOT** drip water on vacuum cleaner.
2. To clean exterior, or to reduce static electricity and dust build-up, wipe outer surface with a clean, soft cloth that has been dipped in a solution of mild liquid detergent and water, then wrung dry. Wipe dry after cleaning.

CAUTION: Do not use attachments if they are wet. Attachments used in dirty areas, such as under a refrigerator, should not be used on other surfaces until they are washed. They could leave marks.

DUST BAG CHANGING

For best cleaning results, the dust bag should be changed often. The CHECK BAG indicator will come on when the bag needs to be changed or the airflow is blocked.

NOTE: See **REPLACEMENT PARTS** for part number and purchase details (page 5).

1. Turn off and unplug vacuum cleaner.

2. Remove hose from canister.

3. Pull hood release out and up, then lift canister hood.

4. Pull bag out of the bag mount.

Note: The bag mount will flip forward after removing bag. This will prevent the hood from closing until a new bag is installed.

5. Check the motor safety filter and clean or, if necessary, replace. See **MOTOR SAFETY FILTER CLEANING** (page 18).

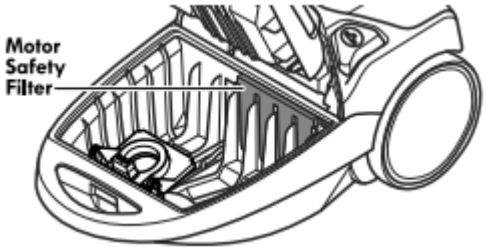

DO NOT bend or crease the middle of the cardboard when installing the bag into the bag mount slots.

6. Rotate bag mount down and install bag into slots per illustration, pushing down until the cardboard tab locks into position and the holes align.

7. Tuck the bag securely into the bag cavity so that none of the bag will be pinched by the hood.

8. Close and latch canister hood.

9. Insert hose into canister until it snaps in place.

10. Plug cord into wall outlet.

CAUTION: NEVER REUSE A DUST BAG. Very fine materials, such as carpet freshener, face powder, fine dust, plaster, soot, new carpet lint, etc. can clog the bag and cause it to burst before it is full, which may damage the vacuum cleaner motor. Change bag more often when vacuuming these materials.

MOTOR SAFETY FILTER CLEANING

WARNING

Electrical Shock Hazard Turn off and unplug vacuum cleaner from electrical outlet. Do not operate the vacuum cleaner without the motor safety filter. Be sure the filter is dry and properly installed to prevent motor failure and/or electrical shock.

MOTOR SAFETY FILTER

Check motor safety filter occasionally and clean when dirty.

NOTE: See **REPLACEMENT PARTS** for part number and purchase details (page 5).

1. Remove the bag as outlined in the **DUST BAG CHANGING** (page 17) section.

2. Lift the rubber retainer and pull out motor safety filter as shown.

3. Wash filter in warm soapy water, rinse, then dry. Do not clean in dishwasher or install while damp.

4. Slide the filter back into place under the ribs in the bag cavity. Tuck filter in so that it fits completely under the rubber retainer.

5. Replace the bag as outlined in the **DUST BAG CHANGING** (page 17) section.

EXHAUST FILTER CHANGING

WARNING

Fire and/or Electrical Shock Hazard

Do not operate with a clogged exhaust filter or without the exhaust filter installed. Do not operate without filter cover installed.

EXHAUST FILTER - HEPA MEDIA

The exhaust filter cartridge must be replaced when dirty. Replace the filter when the entire surface area is covered evenly. The filter **CANNOT** be washed as it will lose its dust trapping ability.

NOTE: See **REPLACEMENT PARTS** for part number and purchase details (page 5).

1. Push latch up to release the exhaust filter cover from slot in canister

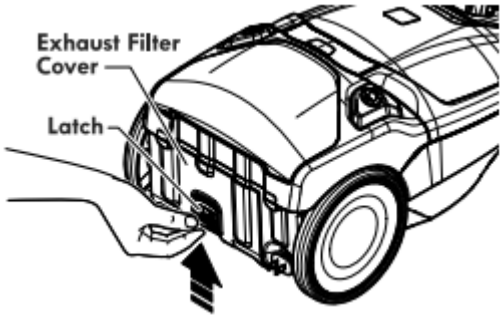

2. Pull filter cover outward to remove from canister.

3. Remove the exhaust filter cartridge.

4. Insert the new exhaust filter cartridge into the canister with the rubber seal towards the canister.

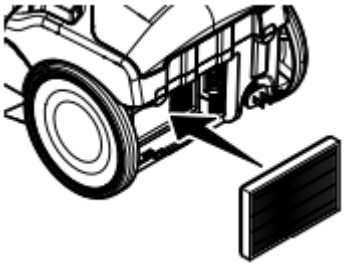

5. To replace the exhaust filter cover place the two tabs on the filter cover into the canister.

6. Rotate filter cover into place

7. Push latch down to lock exhaust filter cover into into place.

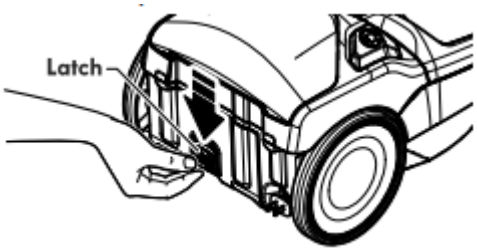

POWERMATE CARE

Always follow all safety precautions when performing maintenance to the PowerMate.

WARNING

Electrical Shock Or Personal Injury Hazard

Always turn off and unplug vacuum cleaner before performing maintenance to the vacuum cleaner. Failure to do so could result in electrical shock or personal injury from vacuum cleaner suddenly starting

BELT CHANGING AND AGITATOR CLEANING

TO REMOVE BELT

1. Turn PowerMate upside down and remove four (4) screws

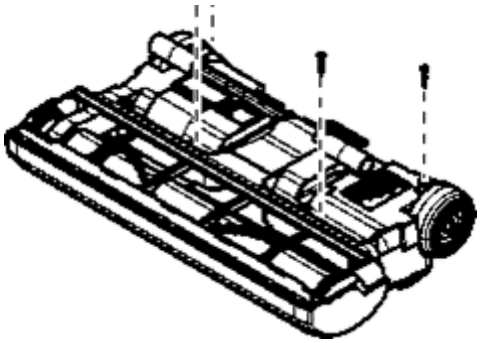

2. Turn PowerMate right side up. Press handle release pedal and lower the swivel. Loosen the rear and side latches. (A flathead screwdriver may be required.)

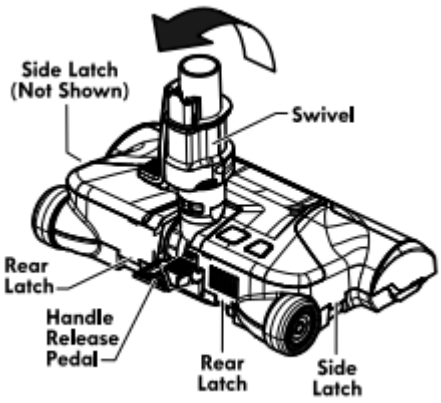

3. To remove cover, grasp the rear and pull up.

4. Lift agitator assembly out and remove worn belt.

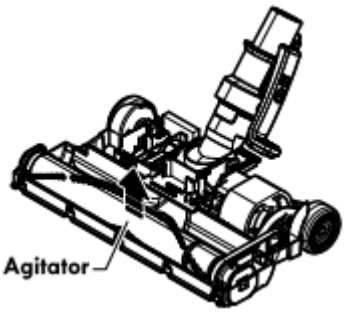

5. Check and clean end cap areas. See **AGITATOR ASSEMBLY** (page 21) for picture of complete agitator assembly

TO CLEAN AGITATOR:

> **NOTE:** In order to keep cleaning efficiency high and to prevent damage to your vacuum cleaner, the agitator must be cleaned every time the belt is changed.
>
> The agitator must also be cleaned according to the following schedule:

Vacuum Cleaner Use	Clean Agitator
HEAVY - (used daily)	every week
MODERATE - (used 2-3 times/week)	every month
LIGHT - (used 1 time/week)	every 2 months

IMPORTANT

Turn off and unplug vacuum cleaner from electrical outlet. Check and remove hair, string and lint build-up in the PowerMate agitator and end cap areas.

Remove any dirt or debris in the belt path area or in the brush unit area.

Carefully remove any string wound onto the agitator and end caps.

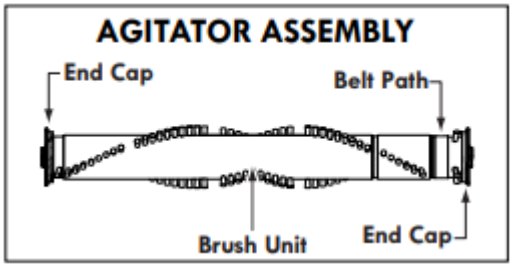

TO REPLACE BELT

1. Install new belt over motor drive, then over belt path.

NOTE: See REPLACEMENT PARTS for part number and purchase details (page 5).

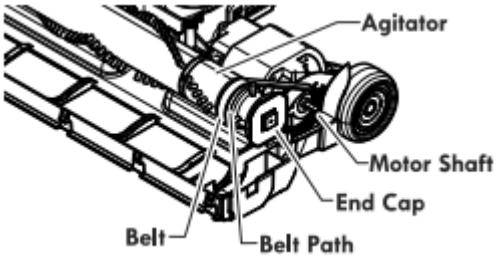

2. Place agitator assembly back into PowerMate .

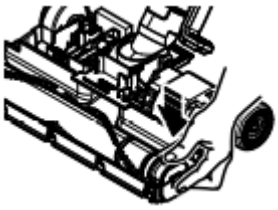

3. Line up front of cover and base. Rest cover on front edge of base as shown.

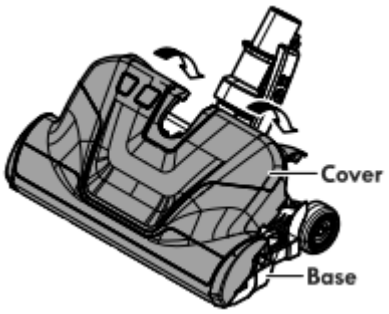

4. Rotate cover back. Press cover firmly until side and rear latches snap into place.

NOTE: Make sure there is no gap between the cover and base.

5. Turn PowerMate upside down and replace four (4) cover screws.

AGITATOR SERVICING

WARNING

Electrical Shock Or Personal Injury Hazard

Always turn off and unplug vacuum cleaner before performing maintenance to the vacuum cleaner. Failure to do so could result in electrical shock or personal injury from vacuum cleaner suddenly starting.

TO CHECK THE BRUSHES

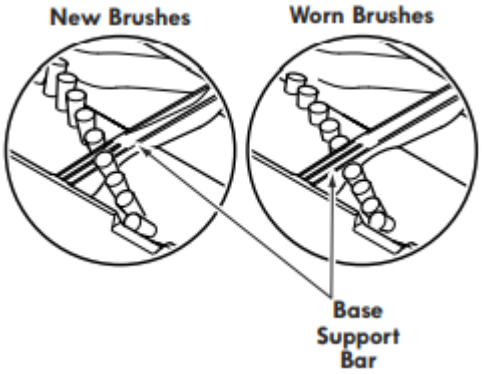

When brushes are worn to the level of the base support bars, replace the agitator assembly

TO REPLACE AGITATOR ASSEMBLY

1. Remove the floor brush from the PowerMate.
2. Remove PowerMate cover, belt and agitator assembly. See “To Remove Belt” in **BELT CHANGING AND AGITATOR CLEANING** (page 20).
3. Install new agitator assembly.

4. Reinstall belt and PowerMate cover. See “To replace belt” in **BELT CHANGING AND AGITATOR CLEANING** (page 20).

NOTE: To purchase a replacement agitator assembly, call 1-844-553-6667 or visit searspartsdirect.com

TROUBLESHOOTING

Review this table to find do-it-yourself solutions for minor performance problems. Any other service needed should be performed by a Sears or other qualified service agent.

WARNING: Always turn off and unplug vacuum cleaner before performing maintenance to the vacuum cleaner. Failure to do so could result in electrical shock or personal injury.

PROBLEM	POSSIBLE CAUSE	POSSIBLE SOLUTION
Vacuum cleaner won't start.	1. Unplugged at wall outlet. 2. Tripped circuit breaker/blown fuse at household service panel. 3. Loose hose electrical connections.	1. Plug in firmly, press ON/OFF switch. 2. Reset circuit breaker or replace fuse. 3. Reconnect hose ends
Poor job of dirt pick-up.	1. Full or clogged dust bag 2. Clogged airflow passages. 3. Dirty filters. 4. Wrong pile height setting. 5. Wrong power level selected. 6. Hole in hose. 7. Worn PowerMate agitator. 8. Worn or broken belt. 9. Dirty agitator or end caps. 10. Canister hood open. 11. Tripped overload protector in PowerMate. See OVERLOAD PROTECTOR (page 15).	1. Change bag. 2. Clear airflow passages 3. Clean/change filters. 4. Adjust setting. 5. Adjust control. 6. Replace hose. 7. Change agitator. 8 & 9. See **BELT CHANGING AND AGITATOR CLEANING.** (page 20) 10. Close and latch hood. 11. Remove any items that may be caught or jammed, then reset. If vacuum cleaner starts and stops again, clean agitator and end caps, then reset.

Vacuum cleaner starts but shuts off.	1. Hose or hood electrical 2. Tripped overload protector in PowerMate. See OVERLOAD PROTECTOR (page 15). 3. Tripped thermal protector in canister.	1. Check connections, reconnect hose ends 2. Remove any items that may be caught or jammed, then reset. If vacuum cleaner starts and stops again, clean agitator and end caps, then reset. 3. See THERMAL PROTECTOR (page 15).
PowerMate will not run when attached.	1. PowerMate connections unplugged. 2. Worn or broken belt. 3. Dirty agitator or end caps. 4. Tripped overload protector in 5. PowerMate. See OVERLOAD PROTECTOR (page 15). 6. Vacuum cleaner in **HARD FLOOR** mode.	1. Plug in firmly. 2 & 3. See **BELT CHANGING AND AGITATOR CLEANING**. (page 20) 4. Remove any items that may be caught or jammed, then reset. If vacuum cleaner starts and stops again, clean agitator and end caps, then reset. 5. Press **CARPET** button to activate PowerMate.
CHECK BAG Indicator activates.	1. Full or clogged dust bag. 2. Dirty filters. 3. Blocked airflow passage. 4. Certain attachment tools	1. Change bag. 2. Clean/change filters. 3. Clear blockage from airflow passage. 4. This is normal. Light should go off when tool is removed.
		1. Adjust setting.

Vacuum cleaner picks up moveable rugs -or- PowerMate pushes too hard.	1. Wrong pile height setting. 2. Suction too strong.	2. Select lower Power Level.
Cord won't rewind.	1. Dirty power cord. 2. Cord jammed.	1. Clean the power cord. 2. Pull out cord and rewind
Vacuum cleaner leaves marks on carpet.	1. Wrong vacuuming pattern	1. See VACUUMING TIPS. (page 12)

Warning

This content is compiled from multiple sources and is provided for reference purposes only. It may not be complete or fully applicable to all situations. If you are unable to resolve your issue, please contact the product manufacturer or an authorized service provider for official support.

Document generated by ManualsFile