FEATURES AND BENEFITS

KEY PARTS AND COMPONENTS

There are several important components that are referenced in this manual.

Front of Dryer

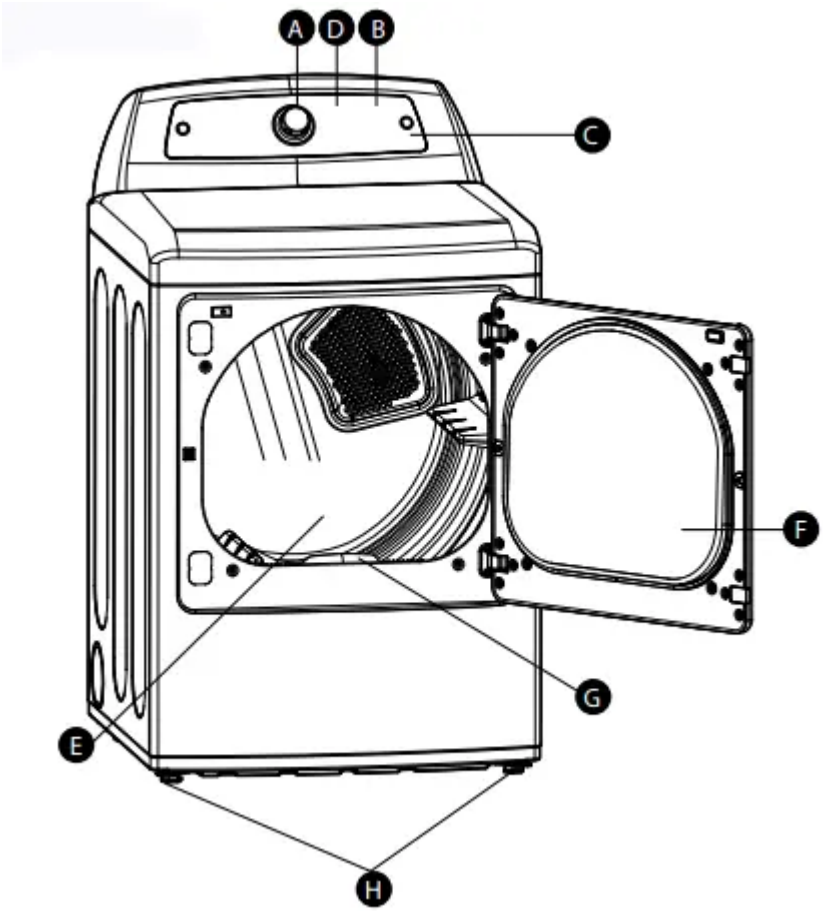

A. EASY-TO-USE CONTROL PANEL

Rotate the cycle selector knob to select the desired dry cycle. Add cycle options or adjust settings with the touch of a button.

B.TIME AND STATUS DISPLAY

The easy-to-read LED display shows cycle status and estimated time remaining.

C.CYCLE MODIFIERS

Adjust the cycle defaults such as temperature and dry level with the touch of a button.

NOTE: Not all settings are available for all cycles.

D.CHECK VENT

(Duct Blockage Sensing System)

The CHECK VENT (Duct blockage sensing system) detects and alerts you to blockages in the exhaust system that reduce airflow from the dryer.

Maintaining clean exhaust system ducts improves operating efficiency and helps minimize service calls, saving you money.

E. LARGE CAPACITY STEEL DRUM WITH DRUM LIGHT

The ultra-large stainless steel drum offers superior durability. The drum light can be turned on during a cycle by using the DRUM LIGHT button on the control panel. The light also comes on when the door is opened, if the control is ON.

F. EASY-ACCESS REVERSIBLE DOOR

The wide-opening, see-through glass door provides easy access for loading and unloading. Door swing can be reversed to adjust for installation location.

E. FRONT-MOUNT LINT FILTER

The front-mount lint filter allows for easy access and cleaning between loads.

H. LEVELING FEET

Four leveling feet (two in front, and two in back) adjust to improve dryer stability on uneven floors.

Rear of Dryer

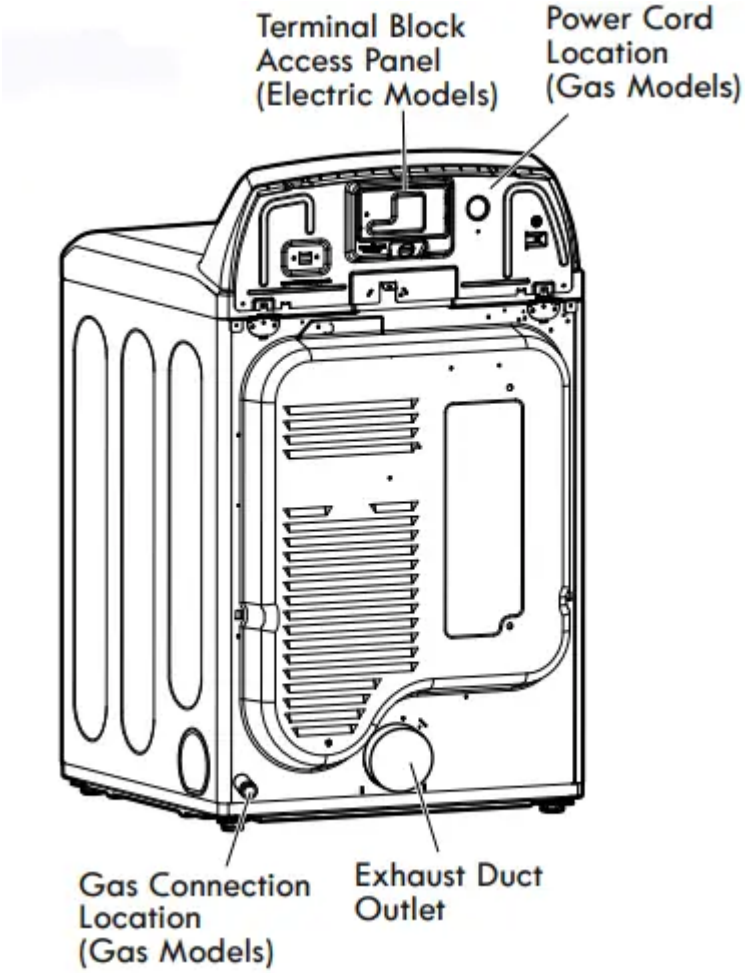

ACCESSORIES

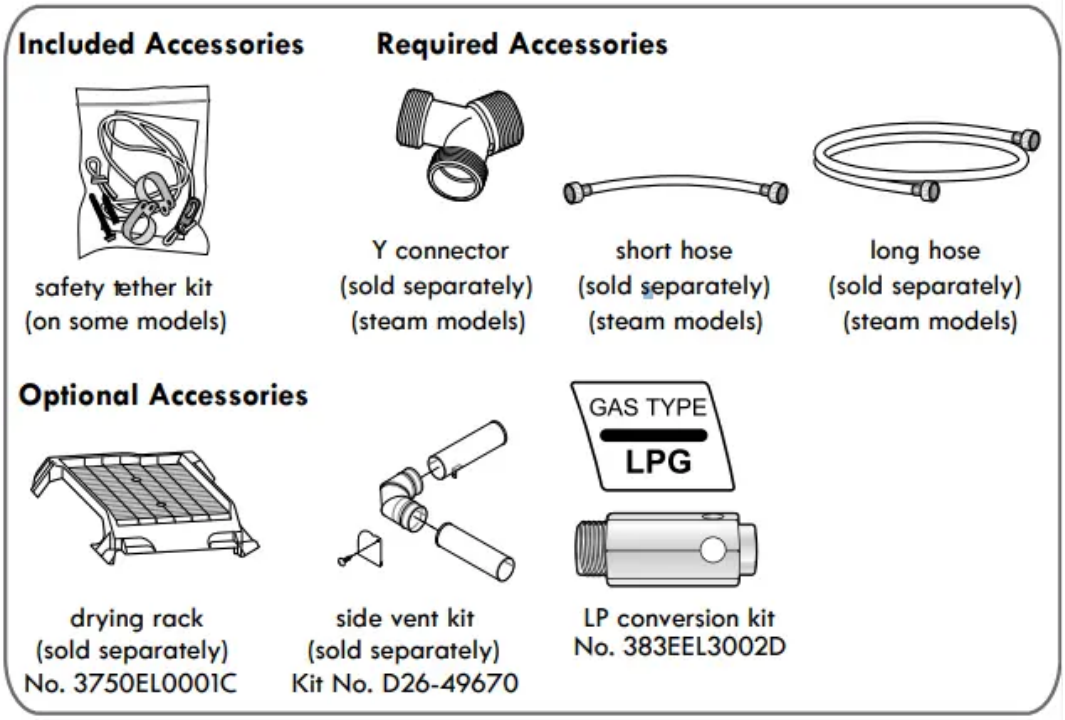

Safety Tether Kit

This optional kit helps prevent the dryer tipping if children climb on the door or if someone should fall onto the door. It is recommended that you install this kit, depending on your situation, but it is not required. Follow the customer installation instructions included with the kit to properly install the kit. If you do not install the kit, store it out of reach of children.

Two-Way Reversible Door (on some models)

Open the dryer door from the top, hamper-style, when loading the dryer to help guide clothes into the drum and prevent them from falling onto the floor. When unloading the dryer or loading bulkier items, use the swing door for easy access to the drum.

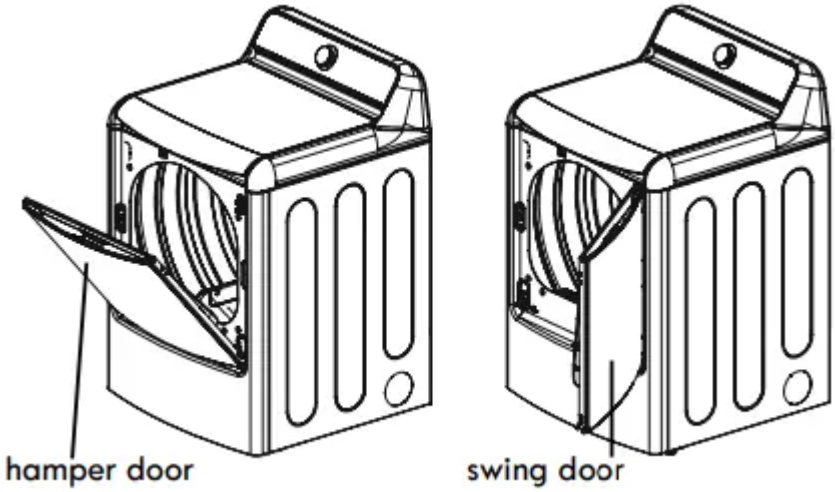

INSTALLATION INSTRUCTIONS

LOCATION REQUIREMENTS

IMPORTANT: Read all installation instructions completely before installing and operating your dryer. It is important that you review this entire manual before installing and using your dryer. It contains detailed instructions concerning electrical connections, gas connections and exhaust requirements.

CHOOSE THE PROPER LOCATION

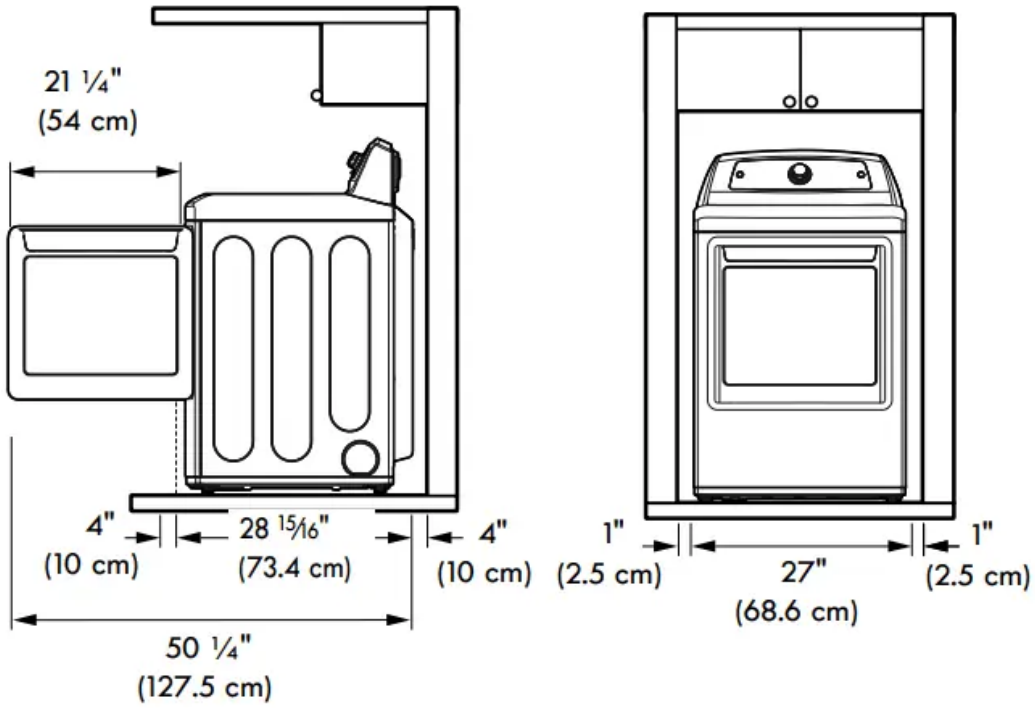

•Store and install the dryer where it will not be exposed to temperatures below freezing or exposed to outdoor weather conditions.

•Choose a location with a solid, level floor.

•If the dryer is being installed in a garage, place the dryer at least 18 inches (45.7cm) above the floor.

•Properly ground the dryer to conform with all governing codes and ordinances.

•To reduce the risk of electric shock, do not install the dryer in damp or wet locations.

NOTE: Installing the dryer in a humid space, or installing or storing the dryer where it will be exposed to the weather or freezing temperatures, may result in rust or other damage that is not covered by the product warranty.

IMPORTANT: If you are installing the dryer in a manufactured or mobile home, refer to the Special Electrical Requirements for Mobile or Manufactured Homes section.

CLEARANCES

•Most installations require a minimum 5 ½ inch (14 cm) clearance behind the dryer for the exhaust ducting.

•Allow minimum clearances of at least 1 inch (2.5 cm) on the sides and back to minimize vibration and noise.

•Allowing additional clearance for installation and servicing is recommended.

•Be sure to allow for wall, door, or floor moldings that may increase the required clearances.

•Allow at least 21 inches (53.3 cm) in front of the dryer to open the door.

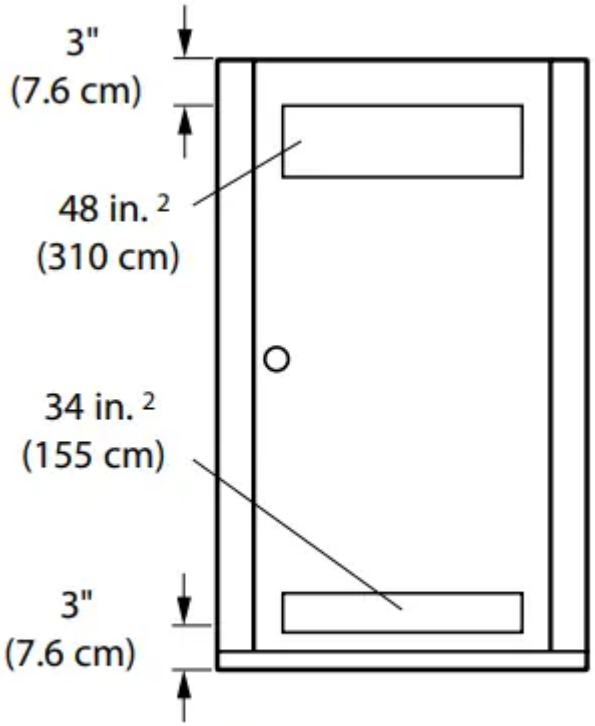

Closet Door Clearance Requirements

Additional Instructions for Closet Installations

The closet door must allow for sufficient airflow. Refer to the diagram above for minimum vent opening requirements. A louvered door is also acceptable.

HOW TO USE

Warning

To reduce the risk of fire, electric shock, or injury to persons, read this entire manual, including the Important Safety Instructions, before operating this dryer.

CONTROL PANEL FEATURES

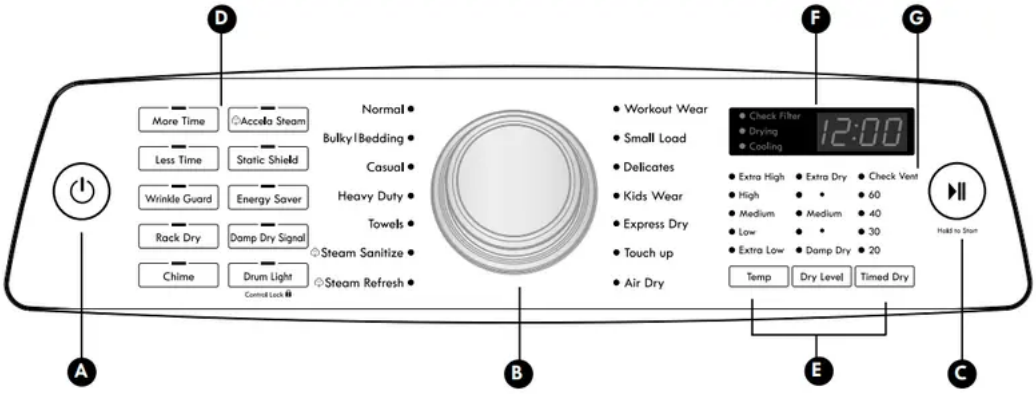

A.POWER (ON/OFF) BUTTON

Press to turn the dryer ON. Press again to turn the dryer OFF. Pressing the POWER button during a cycle will cancel that cycle and any settings will be lost.

B.CYCLE SELECTOR KNOB

The cycle selector knob is used to select the desired dry cycle by rotating the knob in either direction until the desired cycle LED is illuminated. Once the desired cycle has been selected, the standard presets for that cycle will show in the display. These settings can be adjusted using the cycle modifier or option buttons any time before starting the cycle.

C.START/PAUSE BUTTON

Press this button to start the selected cycle. The dryer will display the estimated time (AUTO DRY) or set time (TIMED DRY) remaining and start tumbling. To pause the cycle at any time, open the dryer door or press START/PAUSE. To resume the cycle where it was stopped, press START/PAUSE again.

NOTE: If the dryer has been stopped for more than four minutes, the dryer will turn off automatically and all settings will be lost.

D.OPTION BUTTONS

These buttons allow you to select cycle options. Some of the option buttons have secondary functions. The controls can be locked or unlocked by pressing and holding the DRUM LIGHT button for five seconds.

E. CYCLE MODIFIER BUTTONS

Use these buttons to adjust the settings for the selected cycle. The settings light up above the buttons to show the current selection. The default temperature setting cannot be changed in AUTO DRY cycles. AUTO DRY cycles are modified using the Dry Level button.

F. TIME AND STATUS DISPLAY

The display shows the estimated time remaining for auto cycles and actual time for timed cycles. The status of the cycle is also displayed. The CHECK VENT indicator will illuminate if there is a serious restriction in the exhaust system.

G. CHECK VENT INDICATOR

(DUCT BLOCKAGE SENSING SYSTEM)

The CHECK VENT duct blockage sensing system detects and alerts you to blockages in the ductwork that reduce exhaust flow from the dryer. This light does not indicate any problems with your dryer. If this light blinks, it indicates that your home's exhaust system has a serious restriction, which is not covered by your dryer's warranty.

TIME AND STATUS DISPLAY

The Time and Status Display shows the cycle time, cycle progress, and vent status. When the dryer is turned on, the display will illuminate.

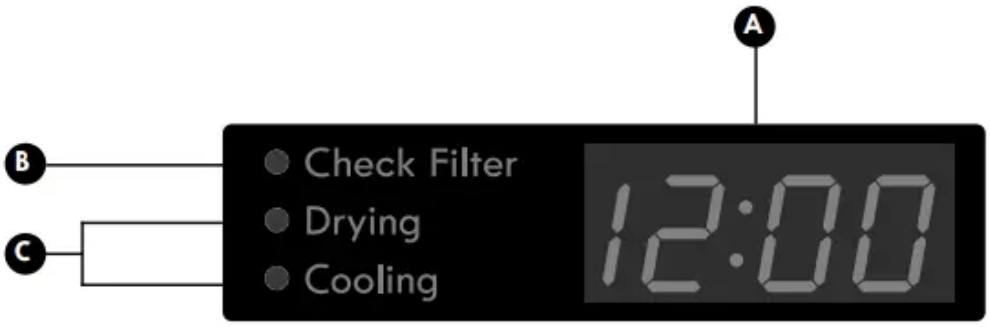

A.TIME DISPLAY

When a cycle is selected, the display will indicate the default time for that cycle including selected options or adjustments. In AUTO DRY cycles,

the time remaining will be estimated and may change during the cycle, depending on the condition of the load. In TIMED DRY, the time displayed will be the actual time remaining.

B.CHECK FILTER LIGHT

The CHECK FILTER light will blink before each load, as a reminder to check the lint filter. Always clean the lint filter before every cycle.

C.CYCLE STATUS INDICATORS

This portion of the display shows which stage of the drying cycle is currently under way (DRYING or COOLING).

OPERATING THE DRYER

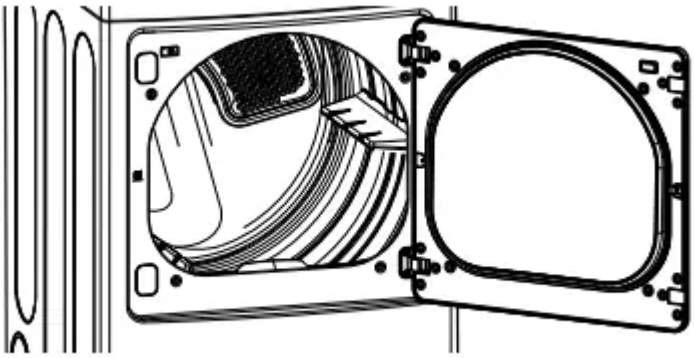

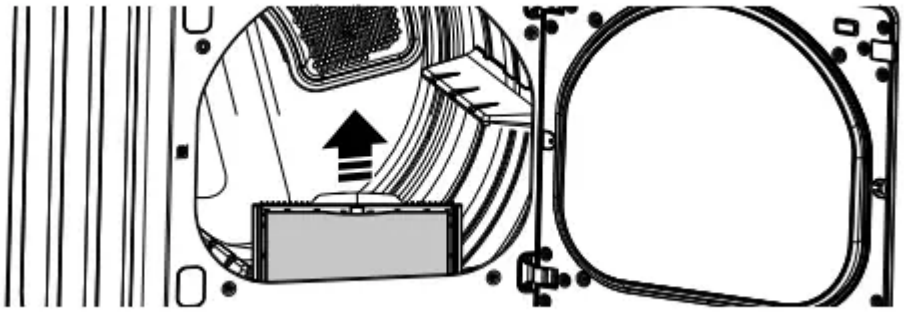

1.LOAD THE DRYER

Load the dryer with the wet laundry from the washer. If the load is extra large, you may need to divide it into smaller loads for proper performance and fabric care.

2.CLEAN THE LINT FILTER

If the lint filter has not already been cleaned, lift out the filter and remove the lint from the last load. This will help ensure the fastest and most efficient drying performance.

3.TURN ON THE DRYER

Press the POWER button to turn ON the dryer. The cycle LEDs will illuminate and a chime will sound.

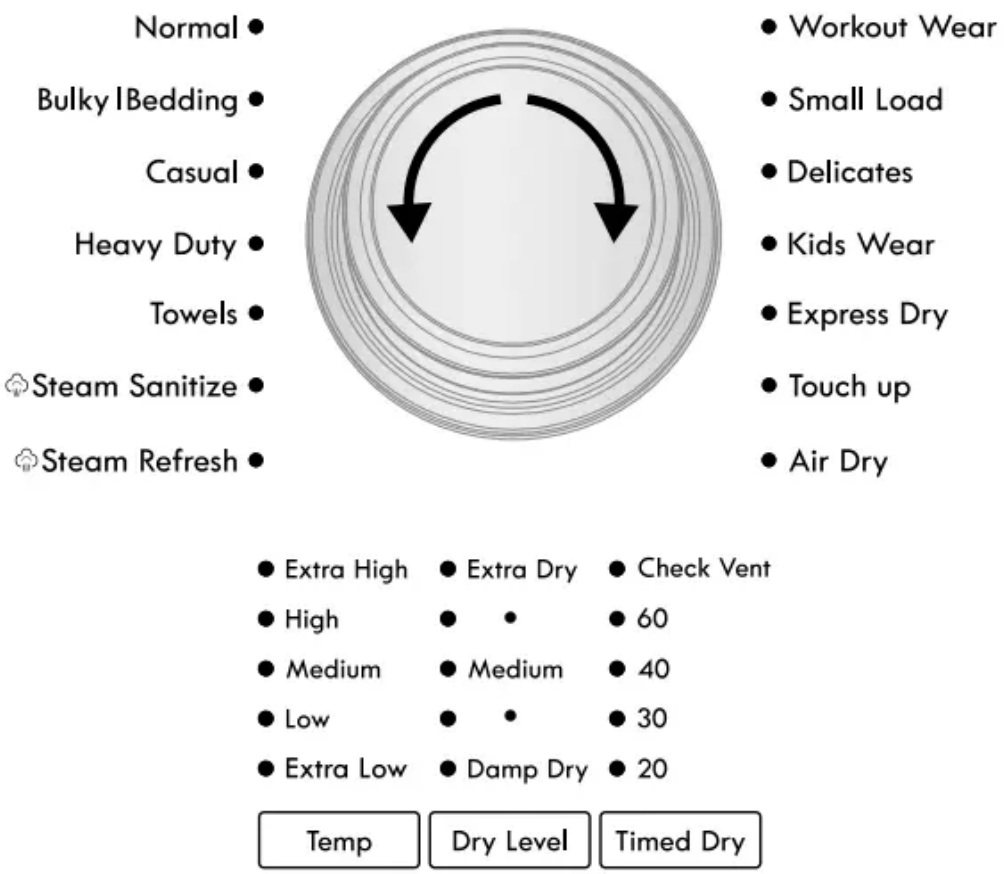

4.SELECT A CYCLE

Turn the cycle selector knob in either direction until the LED for the desired cycle is illuminated. The preset temperature, dry level, and option settings for that cycle will display.

5.SELECT CYCLE MODIFIERS

Default settings for the selected cycle can now be changed, if desired, using the Temp and Dry Level buttons.

NOTE: Not all options or modifiers are available on all cycles. Temperature can only be adjusted on Timed Dry cycles; Dry Level is only available on Auto Dry cycles. A different chime will sound and the LED will not illuminate if the selection is not allowed.

6.SELECT CYCLE OPTIONS

Cycle options can be added using the option buttons.

NOTE: Not all options or modifiers are available on all cycles. A different chime will sound and the LED will not come on if the selection is not allowed.

7.BEGIN CYCLE

Press the START/PAUSE button to begin the cycle. The cycle can be paused at any time by opening the door or by pressing the START/PAUSE button. If the cycle is not restarted within four minutes of being paused, the dryer will shut off and the settings will be lost.

8.END OF CYCLE

When the cycle is finished, the chime will sound. Immediately remove your clothing from the dryer to reduce wrinkling. If WRINKLE GUARD is selected, the dryer will tumble briefly every few minutes to help prevent wrinkles from setting in the clothes.

WARNING: To reduce the risk of fire, electric shock, or injury to persons, read this entire manual, including the Important Safety Instructions, before operating this dryer.

SORTING LOADS

Fabric Care Labels

Most articles of clothing feature fabric care labels that include instructions for proper care.

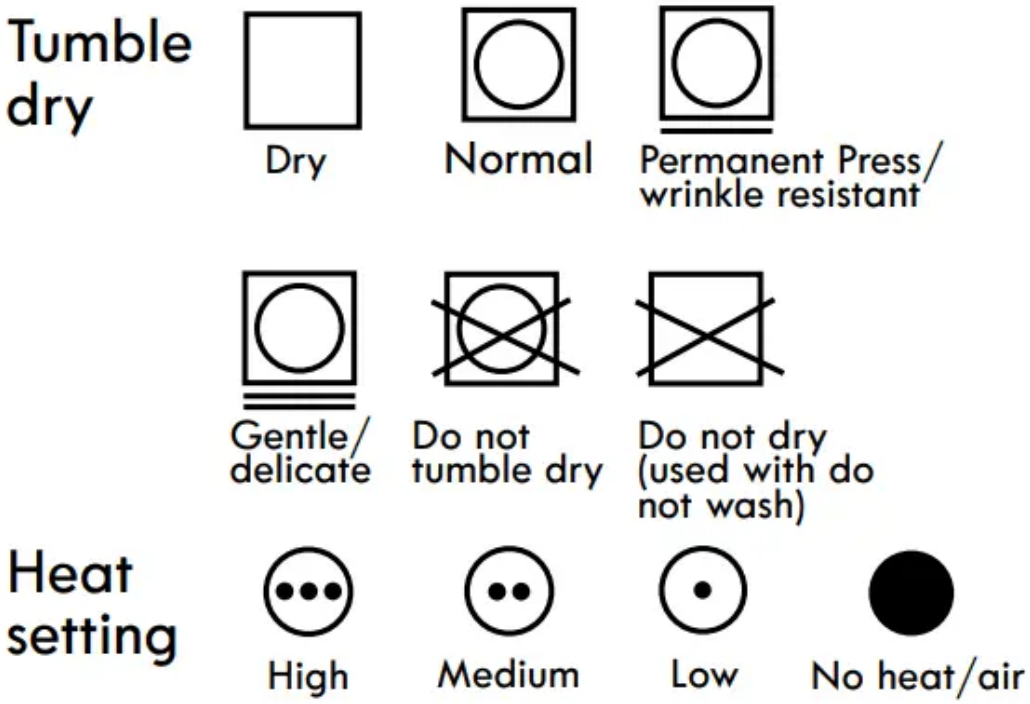

Group Similar Items

For best results, sort clothes into loads that can be dried with the same drying cycle.

Different fabrics have different care requirements, and some fabrics will dry more quickly than others. For best fabric care results, always dry fabrics with similar care requirements together.

LOADING THE DRYER

WARNING: To reduce the risk of fire, electric shock, or injury to persons when using this appliance, follow basic precautions, including the following:

- Check all pockets to make sure that they are empty. Items such as clips, pens, coins, and keys can damage both your dryer and your clothes. Flammable objects such as lighters or matches could ignite, causing a fire. Failure to do so can result in fire, explosion, or death.

•Never dry clothes that have been exposed to oil, gasoline, or other flammable substances. Washing clothes will not completely remove oil residues. Failure to obey this warning can result in fire, explosion, or death.

Loading Tips

•Combine large and small items in the same load.

•Damp clothes will expand as they dry. Do not overload the dryer; clothes require room to tumble and

dry properly.

•Close zippers, hooks, and drawstrings to prevent these items from snagging or tangling on other clothes.

CHECK THE LINT FILTER BEFORE EVERY LOAD

Every time the dryer is turned on, the CHECK FILTER light will blink as a reminder to make sure the filter is clean. Always make sure the lint filter is clean before starting a new load; a clogged lint filter will increase drying times. To clean, pull the lint filter straight up and roll any lint off the filter with your fingers. Do not rinse or wash the filter to remove lint. Push the lint filter firmly back into place.

Always ensure the lint filter is properly installed before running the dryer. Running the dryer with a loose or missing lint filter may damage the dryer and articles in the dryer.

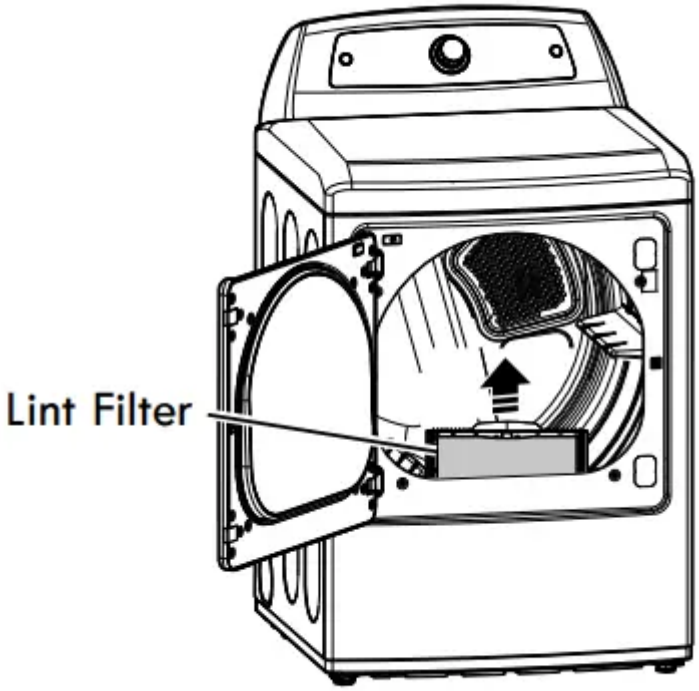

USING THE TWO-WAY DOOR

The dryer is equipped with a two-way door which opens in two directions, from the side as a swing door and from the top as a hamper door.

Swing Door

Use the two-way door as a swing door when unloading, or when loading bulkier items, for easy access to the drum.

To open the swing door, insert your fingers into the handle recess on the top of the door on the side opposite the hinge and pull the door open.

CAUTION:

Make sure the hamper door release is completely closed before using the swing door.

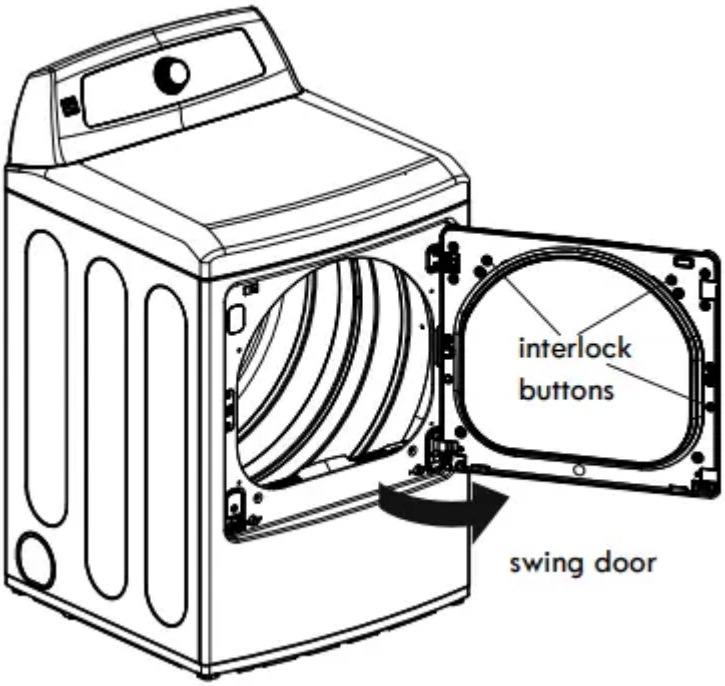

Hamper Door

Use the two-way door as a hamper door when loading. The hamper door opens about 40 degrees, acting as a chute, to help guide items into the drum and help prevent items from falling onto the floor. It also comes in handy when unloading a few small items, helping prevent the rest of the laundry from being pulled onto the floor.

To open the hamper door, press the release on the top of the door and pull the door forward.

Make sure the laundry is fully inserted in the drum before closing the door.

CAUTION:Make sure the swing door latch is completely closed before pressing the hamper door release. hamper door release

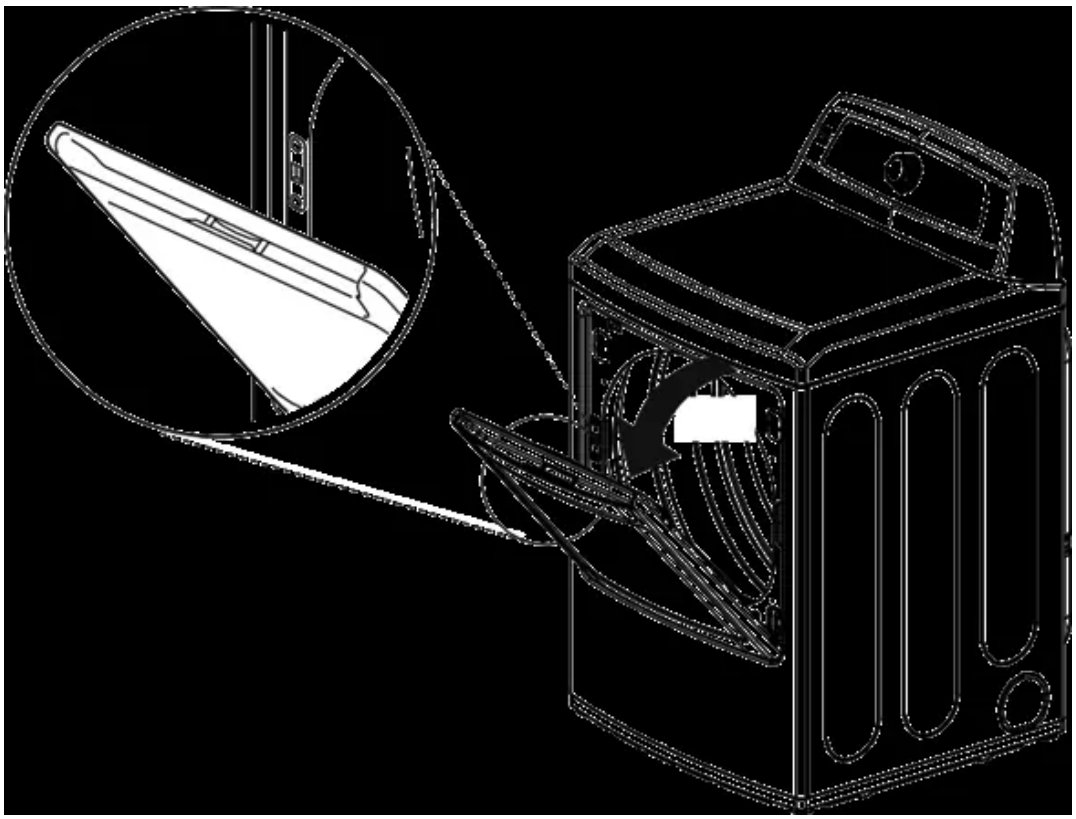

CYCLE MODIFIER BUTTONS

Each cycle has default settings that are selected automatically. You may also customize these settings using the cycle modifier buttons.

AUTO DRY cycles are designed to properly care for specific fabrics and loads. As a result, not all settings are available for each cycle selection.

TIMED DRY cycles have default settings, but you may also customize the temperature setting and add options.

Settings are not limited in most timed dry cycles. Use care when setting options and modifiers for these cycles to prevent damage to your clothing.

NOTE: To protect garments, not every dry level, temperature, or option is available with every cycle.

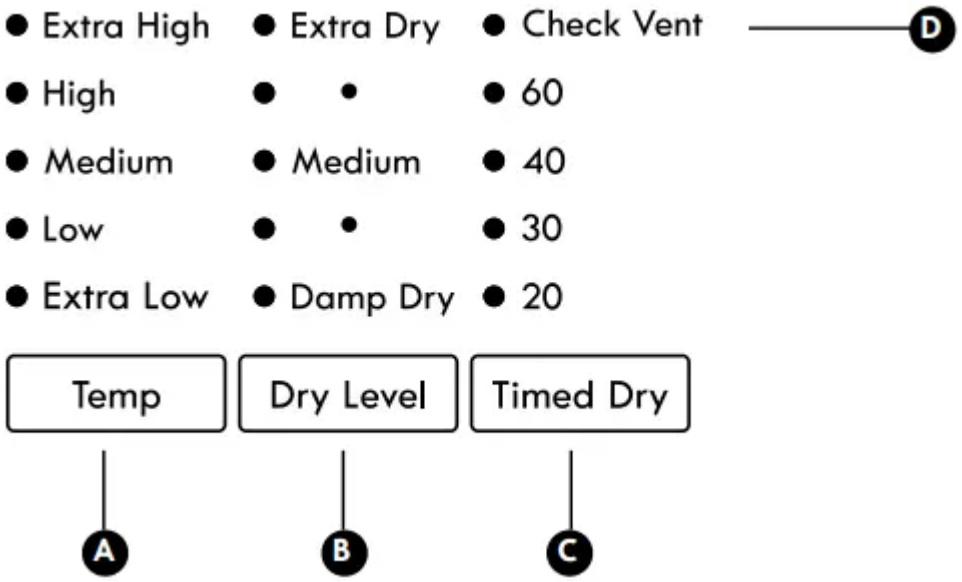

A.TEMP

Adjusts the temperature setting from EXTRA LOW to EXTRA HIGH. This allows precise care of your fabrics and garments. Press the TEMP button repeatedly to scroll through available settings.

Temperature settings are not adjustable in AUTO DRY cycles.

B.DRY LEVEL

Sets the level of dryness for the selected AUTO DRY cycle. Press the DRY LEVEL button repeatedly to scroll through available settings. Use this button to adjust the dryness of the articles in the load to your preference.

- •This option is not available with TIMED DRY cycles.
- •The dryer will automatically adjust the cycle time.
- •Selecting EXTRA DRY will increase the cycle time and dry level, while DAMP DRY will decrease the cycle time and dry level.
- •Use the DAMP DRY setting for items that you wish to iron or hang for final drying.

C.TIMED DRY

Allows you to manually select 20, 30, 40, or 60 minutes of dry time. Use the MORE TIME/LESS TIME buttons to increase or decrease the selected drying time in 1-minute increments. Press and hold the MORE TIME or LESS TIME buttons to rapidly change the time.

D.CHECK VENT

(Duct Blockage Sensing System)

The CHECK VENT (Duct blockage sensing system) detects and alerts you to blockages in the exhaust system that reduce airflow from the dryer.

Maintaining clean exhaust system ducts improves operating efficiency and helps minimize service calls, saving you money.

CYCLE OPTIONS AND SPECIAL FEATURES

The dryer features several additional cycle options and special features to meet your individual needs.

MORE TIME More Time

Use the MORE TIME/LESS TIME buttons to increase or decrease the selected drying time in 1-minute increments.

Press and hold the MORE TIME or LESS TIME buttons to rapidly change the time.

LESS TIME Less Time

Use the MORE TIME/LESS TIME buttons to increase or decrease the selected drying time in 1-minute increments. Press and hold the MORE TIME or LESS TIME buttons to rapidly change the time.

DAMP DRY SIGNAL Damp Dry Signal

If you press the DAMP DRY SIGNAL button, the dryer will emit a chime when the clothes are just short of completely dry, in case you want to remove them for ironing or hang drying.

DRUM LIGHT Drum Light Control Lock

Use the DRUM LIGHT button to turn on the light inside the drum during cycle operation.

NOTE: The drum light will also come on if the dryer door is opened; however, after the dryer has been off for more than four minutes, the drum light will be disabled until the POWER button is pressed to turn on the dryer.

WRINKLE GUARD Wrinkle Guard

Selecting this option will tumble the clothes after the cycle ends for a few seconds every few minutes without heat.

This option is active for 150 minutes after the end of the cycle, or until the door is opened. This helps prevent wrinkles if the clothes are not removed immediately after the cycle has fi nished.

CHIME

The CHIME button adjusts the volume of the chime or turns it off . Press the button repeatedly until the desired sound level is reached.

CONTROL LOCK

Use this option to disable the controls. All controls will be disabled except for the POWER button. Once set, the CONTROL LOCK must be turned off before the controls can be used. After the dryer has shut off , the POWER button will allow the dryer to be turned on, but the controls will remain locked. When the CONTROL LOCK is set, the LED will illuminate and “CL” will display alternately with the cycle time.

Press and hold the DRUM LIGHT button for fi ve seconds to activate or deactivate the CONTROL LOCK.

ENERGY SAVER (on some models)

This option helps to reduce the energy consumption of the Normal cycle, depending on the size of the load.

When the Energy Saver option is selected, the cycle begins with an air dry section and the drying time is increased.

NOTE: The SAVE ENERGY option is turned on by default on the Normal cycle. If you want a faster drying time which begins with heated drying, turn off the SAVE ENERGY option on the Normal cycle.

RACK DRY

Use Rack Dry with items, such as wool sweaters, silk, and lingerie, that should dry fl at. Rack Dry can also be used with items that should not be tumbled dry, such as gym shoes or stuff ed toys.

NOTE: Never tumble dry a load of clothing with the rack installed. When Rack Dry is used, the drum rotates as usual, but the rack does not move. Make sure all items remain completely on the rack and cannot fall off or be pulled off by the turning drum. Remove the rack after use.

Installing the Dryer Rack

1. With the dryer door open, slide the rack into the dryer drum.

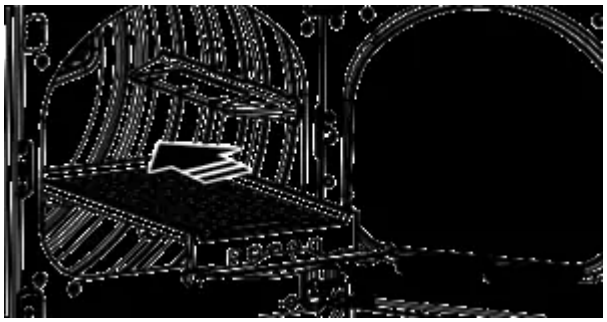

2. Seat the rack evenly on the edge of the inner door rim and resting flat on the inside of the dryer.

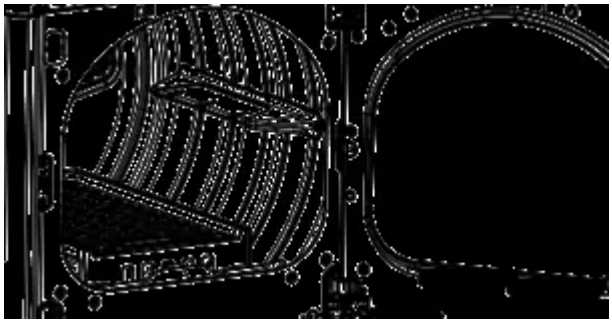

STEAM FEATURES

WARNING:

•Do not open the dryer door during Steam Cycles.

Steam can cause severe burns.

•Do not touch the steam nozzle in the drum during or after the steam cycle.

Using the STEAM REFRESH cycle

The STEAM REFRESH cycle uses the power of steam to quickly reduce wrinkles and odor in fabrics. It brings new life to wrinkled clothes that have been stored for an extended period of time, and it can make heavily wrinkled clothes easier to iron. STEAM REFRESH can also be used to help reduce odors in clothes, such as clothes that were worn in a room where people had been smoking. This cycle can refresh from one to five garments, or one bulky item such as a comforter. Use 3 for one to three garments and 5 for four or five garments. For these settings, the dryer tumbles without heat while the water in the steam generator is heated.

Once steam begins to flow, the dryer will only tumble for about three seconds every minute. Best results are achieved with 70/30 cotton/polyblend fabrics.

The b19 (big) setting should be used for bulky items, such as comforters. For this setting, the cycle begins with a heated dry segment followed by a shorter steam segment, as above.

NOTE: The STATIC SHIELD option can be used together with the STEAM REFRESH cycle to help prevent static electricity after the cycle.

1. Turn the dryer ON and select the STEAM REFRESH cycle.
2. Select the STATIC SHIELD option, if desired.
3. The default number of garments is three. Press the MORE TIME or LESS TIME button to adjust the load size, as described above.
4. Press the START/PAUSE button to start the cycle.

Using the STEAM SANITIZE cycle

The STEAM SANITIZE cycle is ideal for sanitizing non- washable items quickly and easily using the power of steam. This cycle is recommended for use with cotton and polyester materials. (Do NOT use for urethane foam, down feathers, or delicate items.)

IMPORTANT NOTES ABOUT STEAM FUNCTIONS:

•Steam may not be clearly visible during the steam functions. This is normal.

•Do not use Steam Refresh with items such as wool, wool blankets, leather jackets, silk, wet clothes, lingerie, foam products, or electric blankets.

•For best results, load articles of similar size and fabric type. Do not overload.

•If the home's exhaust system is restricted, the performance of the steam functions will be reduced.

•During steam operation, the clothes will tumble for only a few seconds, once a minute.

STATIC SHIELD

This option uses steam late in the drying cycle to reduce the static electricity caused by dry fabrics rubbing together. Change the steam time by pressing the MORE TIME and LESS TIME buttons to display the approximate number of articles in the load: 7, 9, 11, 14, 16 or 18.

Steam time is approximately 1-6 minutes, depending on the number of garments selected.

NOTE: When STATIC SHIELD is added to auto dry cycles, the LESS and DAMP dry levels cannot be selected.

ACCELA STEAM

ACCELA STEAM helps prevent the overdrying of clothes by injecting steam during the drying process.

USING THE STEAM OPTIONS

Adding Steam to a Standard Cycle

1. Turn the dryer ON and turn the cycle selector knob to select the desired cycle.
2. Use the cycle modifier buttons to adjust the settings for that cycle.

3. Press the button for the steam option desired. Adjust for the load size using the MORE TIME or LESS TIME button.
4. Press the START/PAUSE button to start the cycle.

STEAM CYCLE GUIDE

Cycle	Steam	Default Time	Temp. Control	Dry Level	Fabric State	Fabric Type	Maximum Amount
Steam Sanitize		31 minutes			dry	comforter, bedding	single (1 each)
						children's clothing	3 lb
Steam Refresh		10 minutes	●		dry	comforter	single (1 each)
						shirts*	5 each
Sensor Cycle + Steam Option	+ Static Shield	follows selected cycle		●	wet	varies by selected cycle	8 lb (18 items)
	+ Accela Steam			●	wet	varies by selected cycle	8 lb (18 items)
Timed Dry	+ Static Shield	38 minutes	●		wet	varies by selected cycle	8 lb (18 items)

* Shirt: 70% cotton / 30% poly blend. Except especially delicate fabrics.

•When the lint filter or exhaust duct is clogged, steam options will not give proper results.

•For best results, load articles of similar size and fabric type. Do not overload.

NOTE:

•When sensor dry is selected with the STATIC SHIELD or ACCELA STEAM option, a dry level of Less or Damp cannot be selected.

•The STATIC SHIELD option may also be selected during Timed Dry cycles.

•After the steam option is selected in Timed Dry, the MORE TIME or LESS TIME buttons will change the steam time only.

•After pressing Start/Pause, the MORE TIME or LESS TIME buttons will be disabled.

USER MAINTENANCE INSTRUCTIONS

WARNING: To reduce the risk of fire, electric shock, or injury to persons, read this entire manual, including the Important Safety Instructions, before operating this dryer.

•Unplug the dryer or turn the power off before cleaning to avoid the risk of electric shock. Failure to follow this warning can cause serious injury, fire, electrical shock, or death.

•Never use harsh chemicals, abrasive cleaners, or solvents to clean the dryer. They will damage the finish.

REGULAR CLEANING

Cleaning the Exterior

Proper care of your dryer can extend its life. The outside of the machine can be cleaned with warm water and

a mild, nonabrasive household detergent. Immediately wipe off any spills with a soft, damp cloth.

IMPORTANT: Do not use cleaning alcohols, solvents, or similar products.

NEVER use steel wool or abrasive cleansers because they can damage the surface.

Cleaning the Interior

Wipe around the door opening and seal with a soft, damp cloth to prevent lint and dust buildup that could damage the door seal.

Clean the window with a soft cloth dampened with warm water and a mild, nonabrasive household detergent, then wipe dry.

NEVER use steel wool or abrasive cleansers; they can scratch or damage the surface.

Cleaning Around and Under the Dryer

Vacuum lint and dust from around the dryer and underneath it regularly.

Cleaning the Lint Filter

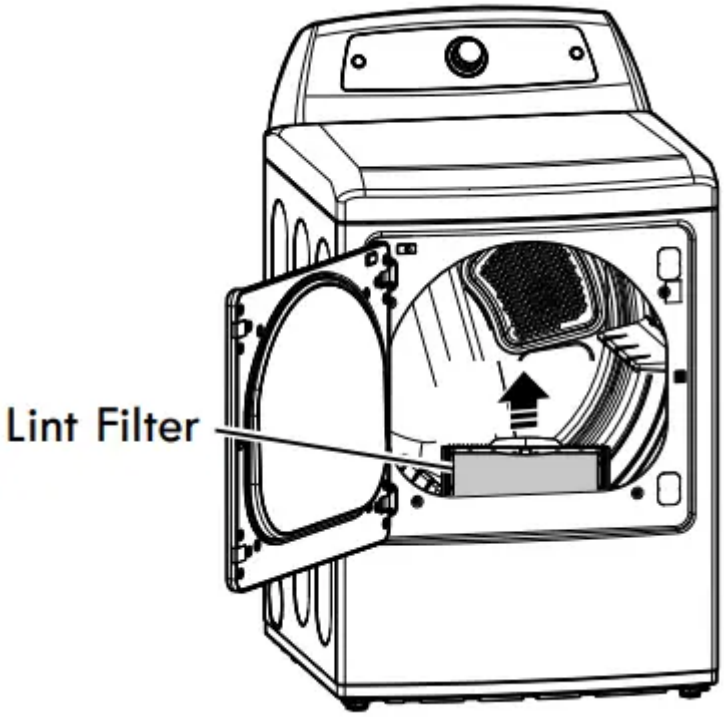

ALWAYS make sure the lint filter is clean before every cycle. The CHECK FILTER light on the control panel will blink before every cycle to remind you.

NOTE: NEVER operate the dryer without the lint filter.

To remove lint between cycles:

1. Open the dryer door.

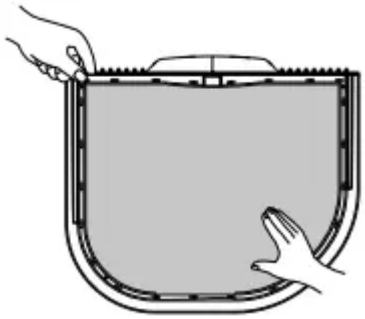

2. Pull the lint filter straight up.
3. Roll any lint off the filter with your fingers.

Periodic thorough cleaning:

Some fabric softeners can build up on the lint filter over time. This buildup can restrict the airflow through the filter reducing dryer efficiency and lengthening drying times. After removing lint, if the filter looks dark or dirty when held up to the light, follow these steps to clean:

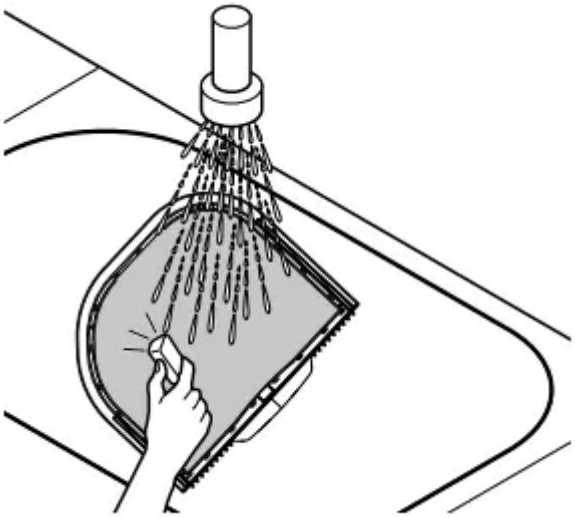

1. Use hot soapy water and a stiff brush to clean the filter.
2. Make sure the filter is completely dry before reinstalling it and using the dryer.

NOTE: NEVER operate the dryer with a wet lint filter.

MAINTAINING THE EXHAUST SYSTEM

The most common cause of dryer problems is poor exhaust venting. Poor exhaust venting may result from the following conditions:

•DIRTY OR DAMAGED EXHAUST DUCTS

•WRONG VENT MATERIAL

•RESTRICTED OR DAMAGED VENT HOOD

•EXCESSIVELY LONG VENT

•THE USE OF PLASTIC OR FOIL VENTING

Maintaining the Exhaust System

Vent ducts should be checked for lint buildup and cleaned at least once per year. If any noticeable reduction in drying performance occurs, check the ducts for obstructions and blockages.

If the CHECK VENT indicator illuminates, the exhaust system should be checked immediately for damage or obstructions. The CHECK VENT indicator signals a serious reduction in exhaust airflow which will greatly reduce energy efficiency and increase drying times.

Damaged or restricted exhaust systems are not covered by the dryer warranty. Damage to the dryer that is caused by damaged, restricted, or otherwise inadequate exhaust systems is not covered by the dryer warranty.

CHECK VENT Indicator

The CHECK VENT warning system is designed to help you avoid the reduced performance caused by

restrictions in the household exhaust system. The CHECK VENT indicator illuminates to alert you when problems in the system occur, so you can have them repaired.

While you should always check and maintain your exhaust system regularly, the CHECK VENT warning system will detect and alert you if serious problems develop in your home’s exhaust system. This includes exhaust systems that are unsatisfactory for any reason including a blockage in the venting, crushed/kinked venting, or venting which exceeds the maximum recommended length requirement as described in the installation section.

NOTE: The total length includes the length from the back of the dryer to the outside vent hood, PLUS a factor for every 90° elbow in the exhaust system. For example, if the distance from the back of the dryer to the vent hood is 30 feet, and there are four elbows in the system, then it exceeds the 28 foot maximum length allowed for those conditions.

The CHECK VENT indicator on the control panel will alert you that the exhaust system is not moving enough air from the dryer to the outside. This lack of airflow will lead to long dry times, poor drying and possibly dryer failure.

As a reminder, external dryer venting is considered part of your home and is not covered by the product warranty or protection agreements. There are services available for cleaning/maintaining the external venting.

CHECK VENT Operation

The CHECK VENT system uses components already in the dryer. By monitoring these components over the

course of several cycles, the control is able to determine how much restriction there is in the exhaust system. If

it detects a high level of restriction, it will turn on the CHECK VENT light to alert you to the condition. The dryer will continue to operate after the light comes on, but you should have the exhaust system cleaned or repaired immediately to avoid longer dry times and higher energy consumption.

IMPORTANT: In order for a dryer to properly and efficiently dry your clothes, it is extremely important that the exhaust system is as short and clean as possible. It MUST be less than the maximum installation requirements as outlined in the installation section. It is also very important that you make sure that when the dryer is installed, the exhaust system is clean and clear of any restrictions and is not kinked or crushed.

Failure to meet these guidelines will result in long dry times, increased energy consumption and possibly even clothing damage or dryer failure. When exhaust system restrictions become extreme, the CHECK VENT light will blink to alert you to the condition so you can have the exhaust system cleaned or repaired.

1. To prevent false alarms and for increased reliability, the dryer will monitor the exhaust condition for several loads. If multiple, consecutive cycles exceed the restriction limits, the control will blink the CHECK VENT indicator.

2. A blinking CHECK VENT indicator means the external venting should be checked for potential restrictions as soon as possible.

3. The CHECK VENT indicator will remain active (blinking) until the restriction is resolved AND the control has verified the improved airflow for several cycles.

4. After the exhaust is cleaned or repaired, it will take several cycles for the CHECK VENT indicator to reset and turn off the light.

NOTE: The CHECK VENT indicator is designed to measure performance over several consecutive cycles before activating or deactivating, to avoid false alarms. A very large load, such as a large comforter, could cause the CHECK VENT system to sense that the exhaust system is restricted, but this would not cause the light to blink. However, if several large loads were to run back to back, the CHECK VENT indicator could be activated.

TROUBLESHOOTING GUIDE

FAQs

Q: When I press a button, why does my dryer beep and then nothing happens?

A: The Control Lock feature is turned on. To turn off Control Lock, turn the dryer on, then press and hold the button that has *Control Lock on or under it for 5 seconds.

Q: Why does my dryer take so long to dry clothes?

A: Proper airfl ow is critical to the effi cient operation of clothes dryers. A lint fi lter which is full of lint or clogged with fabric softener sheet residue can reduce the airfl ow to the point that the time required to dry clothing will be greatly increased. Another factor aff ecting dry time is your home exhaust system. An exhaust system which is dirty and clogged with lint, or is excessively long, needs to be professionally cleaned or repaired.

Q: Why does my dryer start by itself every few minutes?

A: This is how the Wrinkle Guard feature works. The dryer runs briefl y every few minutes for up to 3 hours after the cycle fi nishes. This feature is designed to help prevent wrinkles from setting in when the dryer is not unloaded immediately after the cycle is fi nished.

Q: Why does my dryer show 3 minutes when I select the Steam Refresh cycle?

A: When the Steam Refresh cycle is selected, the dryer displays the number of garments rather than the estimated cycle time, until the cycle is started. Use the MORE TIME or LESS TIME buttons to adjust the load size setting for the number of garments you desire. For a large load or single bulky item use the bi9 (big) setting.

BEFORE CALLING FOR SERVICE

Problem	Possible Cause	Solutions
***CHECK VENT indicator is blinking** * This warning light is not a dryer failure and is not covered by the dryer warranty. Contact a duct cleaning service to have your exhaust system cleaned and Inspected.	Exhaust system is too long or has too many turns/restrictions.	Install a shorter or straighter duct run. See the Installation Instructions for details.
	Partial blockage of the ductwork due to lint buildup or other foreign object.	Ductwork should be checked/cleaned immediately. Dryer can be used in this condition, but drying times will be longer and energy consumption will increase.
	The appliance has detected a restriction in the external dryer venting.	See the CHECK VENT INDICATOR and CHECK VENT OPERATION sections for details regarding this function.
The display shows d80, d90, or d95	The ductwork is about 80%-95% blocked. These error codes are only displayed for 2 hours.	Do not use the dryer until the exhaust system has been cleaned and/or repaired. Using the dryer with a severely restricted exhaust is dangerous and could result in a fire or other property damage. Check the outside dryer vent while the dryer is operating to make sure there is strong airflow. If the exhaust system is extremely long, have It repaired or rerouted. Keep the area around the dryer clean and free of clutter. Check vent hood for damage or lint clogging. Make sure the area around the vent hood is clear.
The CHECK VENT indicator remains active (blinking) after clearing the restriction in the venting.	After clearing the restriction, the CHECK VENT system requires multiple, consecutive cycles to determine that the performance value has improved before the CHECK VENT indicator is reset.	If the CHECK VENT indicator remains active for more than five cycles after the restriction has been cleared, call for service.

Dryer will not turn on	Power cord is not properly plugged in.	Make sure that the plug is securely plugged into a grounded outlet matching the dryer's rating plate.
	House tuse is blown, circuit breaker has tripped, or power outage has occurred.	Reset circuit breaker or replace fuse. Do not increase fuse capacity. If the problem is a circuit overload, have it corrected by a qualified electrician.
Buttons are disabled or CL shows in display	CONTROL LOCK function is engaged.	Press and hold the DRUM LIGHT button for three seconds to activate or deactivate the function.
Error code: tEl through tE7	Temperature sensor failure.	Turn off the dryer and call for service.
Display shows error code PS (electric dryers only)	Power cord is connected incorrectly.	White (N) and red (L2) wires on power cord. Check power cord connections for neutral connection on the center terminal. 240 volts applied to the control, so it will protect itself.
Display shows error code nP or gAS	Power cord connection is incorrect.	Check the connection of power cord to terminal block.
	Gas supply or service turned off (gas models only).	Confirm that house gas shutoff and dryer gas shutoff are both fully open.
Light does not turn on when door is opened	Dryer has been off for more than four minutes and light is disabled.	Press the POWER button to turn on the dryer, which will enable the drum light.

Dryer does not heat	House fuse is blown, circuit breaker has tripped, or power outage has occurred.	Reset circuit breaker or replace fuse. Do not increase fuse capacity. If the problem is a circuit overload, have if corrected by a qualified electrician. **NOTE:** Due to the design of electric dryers, it is possible for a circuit problem to allow an electric dryer to run without heat.
	Gas supply or service is turned off (gas models only).	Confirm that the house gas shutoff and the dryer gas shutoff valves are both fully open. Even if gas is not supplied to the dryer, it will run and no error codes will display. Verify that other gas appliances in the home are working normally.

Greasy or dirty spots on clothes	Clean and dirty clothes are being dried together.	Only use your dryer to dry clean items. Soil from dirty clothes can transfer to the clean clothes in the same or later loads.
	Clothes were not properly cleaned or rinsed before being placed in the dryer.	Stains on dried clothes could be stains that weren't removed during the washing process. Make sure that clothes are being completely cleaned or rinsed according to the instructions for your washer and detergent. Some difficult soils may require pretreating prior to washing.
Lint on clothes	Lint filter not cleaned properly.	Remove the lint from the filter before every load. With the lint removed, hold the filter up to a light to see if it is dirty or clogged. If it looks dirty, follow the cleaning instructions. With some loads that produce high amounts of lint, it may be necessary to clean the filter during the cycle.
	Laundry not sorted properly.	Some fabrics are lint producers (i.e., a fuzzy white cotton towel) and should be dried separately from clothes that are lint trappers (i.e., a pair of black linen pantsj.
	Excess static in clothes.	Use a fabric softener to reduce static electricity. Be sure to follow the manufacturer's instructions. Over drying a load of laundry can cause a buildup of static electricity. Adjust settings and use a shorter drying time, or use AUTO DRY cycles.
	Dryer is overloaded.	Divide extra large loads into smaller loads for drying.
	Tissue, paper, etc., left in pockets.	Check pockets thoroughly before washing and drying clothes.

Drying time is not consistent	Heat settings, load size, or dampness of clothing is not consistent.	The drying time for a load wi on the type of heat used (ele or LP gas), the size of the lo fabrics, the wetness of the c condition of the exhaust duc Even an unbalanced load in cause poor spinning, resultin which will take longer to dry.
Cloth take loo long la dry	Exhaust ducts are blacked, dirty, ar duct run Is too long.	Confirm that the exhaust duct configured and free of debris, obstructions. Make sure that dampers con open propedy a jammed, or damaged.
	Load is not properly sorted.	Separate heavy items from lig Larger ar*d heavier items tak Light items in a load with hea the sensor because the light i
	Large load ot heavy fabrics.	Heavy fabrics lake longer to d tend to retain more moisture. and maintain more consisten large and heavy fabrics, sepa into smaller loads of a consis
	Dryer controls are not set properly.	Use the appropriate control s of load you ore drying. Some an adjustment of the DRY LE proper drying.
	Lint filter reeds to be cleaned.	Remove the lint from the filter With the lint removed, hold th to see if it is dirty or clogged. follow the cleaning instruction loads that produce high amou new bath towels, it may be ne the cycle and clean the filter d

	House fuse is blown, circuit breaker has tripped, or power outage has occurred.	Reset circuit breaker or repla increase fuse capacity. If the overload, have it corrected by electrician. NOTE: Due to the design of e possible for a circuit problem dryer ta run without heat.
	Dryer is overloaded.	Divide extra large loads into s better drying performance an
	Dryer is under leaded.	If you ore drying □ very small extra items ta ensure proper the load is very small and you DRY cycles, the electronic co properly sense the dryness a shut off too saan. Use TIMED extra wet clothes to ihe load.

Clothes are wrinkled	Clothes dried too long (over dried).	Over drying a load of laundry can lead to wrinkled clothes. Try a shorter drying time or LESS DRY setting and remove items while they still retain a slight amount of moisture.
	Clothes left in dryer too long after cycle ends.	Use the WRINKLE GUARD option. This feature will tumble the clothes briefly every few minutes for up to 150 minutes to help prevent wrinkling.
Clothes are shrinking	Garment care instructions are not being followed.	To avoid shrinking your clothes, always consult and follow fabric care instructions. Some fabrics will naturally shrink when washed. Other fabrics can be washed but will shrink when dried in a dryer. Use a low or no heat setting.
Excess static in clothes after drying	Fabric softener is not used or used incorrectly.	Use a fabric softener or the STATIC SHIELD option, if equipped, to reduce static electricity. Be sure to follow the manufacturer’s instructions.
	Clothes dried too long (over dried).	Over drying a load of laundry can cause a buildup of static electricity. Adjust settings and use a shorter drying time, or use AUTO DRY cycles. Select a LESS DRY setting on AUTO DRY cycles, if necessary.
	Drying synthetics, permanent press, or synthetic blends.	These fabrics are naturally more prone to static buildup Try using fabric softener, or use LESS DRY and/or shorter TIMED DRY time settings.

Steam Features Not Working	Water drips from nozzle when steam cycle starts.	This is normal steam condensation. The dripping water will stop after a short time.
	Steam is not visible during steam cycle.	This is normal. Check for condensation on the inside of the door during the steam portion of the cycle. Steam is not directly visible.
	Steam is not generated and no error code is displayed.	Water level error. Unplug the dryer and call for service.
	Garments are still wrinkled at the end of the STEAM REFRESH cycle.	Load only one to five garments (or a single bulky item). Do not mix fabric types. STEAM REFRESH is most effective on 70/30 cotton/polyblends. Do not use on 100% cotton items.
	Creases or pleats are gone from garments after Steam Refresh.	This cycle removes wrinkles from fabric. Use an iron to replace creases and pleats in garments.
	Garments have static after using the Static Shield option.	The amount of static that builds up when wearing garments depends on the individual moisture level in the skin.
	Garments are too damp or too dry after using Static Shield option.	Select the load weight manually before starting the Static Shield option.
	Water drips down the door during steam cycles.	Steam is invisible. However, under some conditions, the condensed fog may be seen, or condensation will form on the inside of the door glass and may be seen dripping down the glass.
	Drum does not turn during steam cycles.	The drum is turned off so that the steam vapor remains in the drum. The drum will turn for only a few seconds, once a minute.

	Cannot see steam vapor at the beginning of the cycle.	Steam is released at different stages of the cycle for each option. Steam cannot be seen, but condensation may form on the inside of the door when steam is being generated.
	Odors are not completely removed at the end of the STEAM REFRESH cycle.	Some odors are difficult to remove. Fabrics containing certain difficult odors or very strong odors may not refresh well and should be washed or dry cleaned instead.

Warning

This content is compiled from multiple sources and is provided for reference purposes only. It may not be complete or fully applicable to all situations. If you are unable to resolve your issue, please contact the product manufacturer or an authorized service provider for official support.

Document generated by ManualsFile