Installing your new appliance

Before using the appliance for the first time, your should consider the following guidance.

Ventilation of appliance

In order to improve the efficiency of the cooling system and save energy, it is necessary to maintain good ventilation around the appliance for the dissipation of heat. For this reason, sufficient., clear space should be available around the refrigerator. It is recommended to leave 50mm of space from the back of the unit to the wall, at least 100mm from its top, at least 50mm from its side to the wall and a clear space upfront to allow the doors to open 130° and the refrigerator door to open 135°. See in follow diagrams. Please refer to diagrams below.

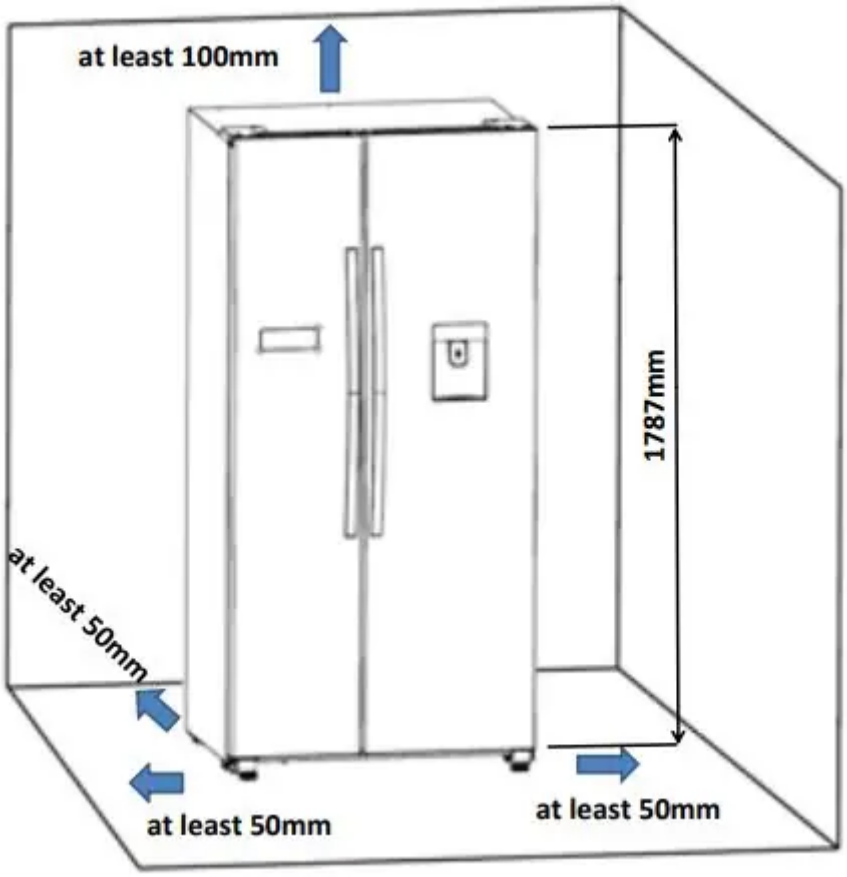

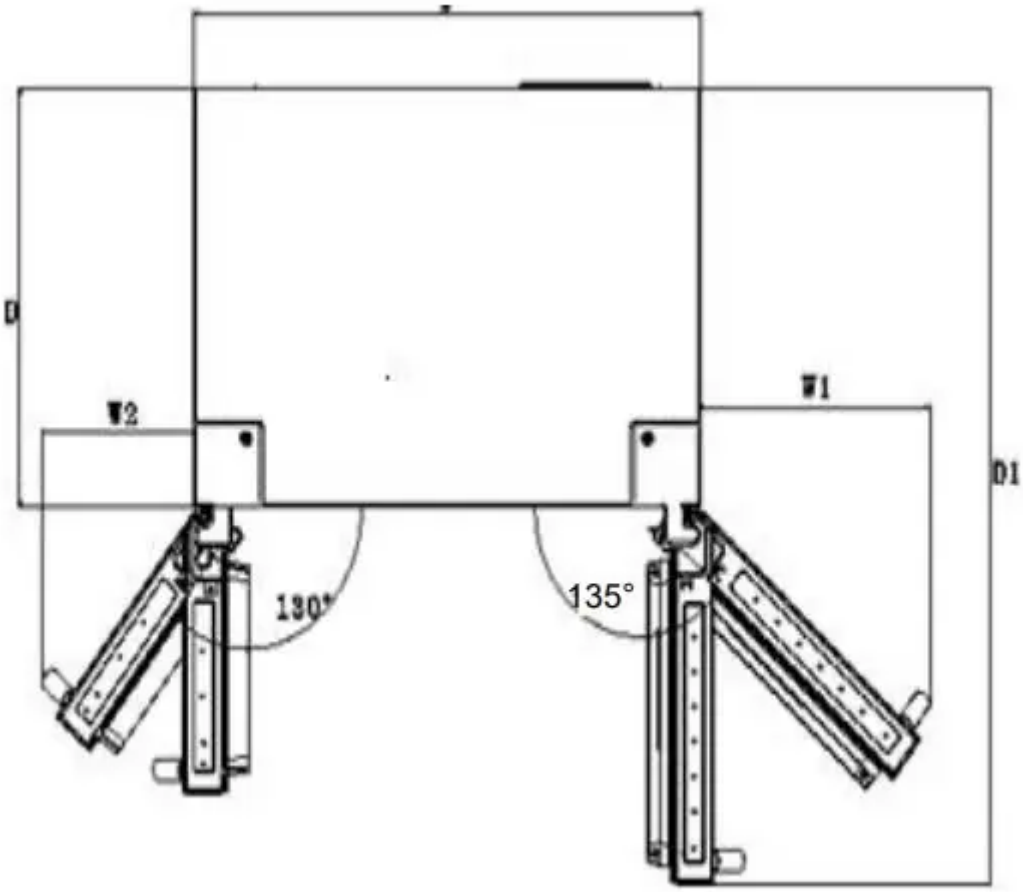

Relevant information (Constant/mm)

W	W1	W2	D	D1
908	417.5	277	600	1142.5

Note:

- This appliance performs well in the below climate class. It may not work properly if being left at a temperature above or below the indicated range for a long period.

Climate class	Ambient temperature
SN	+10°C to +32°C
N	+16°C to +32°C
ST	+16°C to +38°C
T	+16°C to +43°C

- Stand your appliance in a dry place to avoud high moisure.
- Keep the appliance out of direct sunlight, rain or frost. Stand the appliance away from heat sources such as stoves, fires or heaters.

Leveling of appliance

- For sufficient leveling and air circulating in the lower rear section of the appliance, the bottom feet may need to be adjusted. Please use a suitable spanner.
- To allow the doors to self-close, tilt back the top backwards at about 15mm or 0.5 by turning the ° adjustable feet.
- Whenever you want to move the appliance, remember to turn the feet back up, so that the appliance can roll freely. Reinstall the appliance when relocating.

Warning!

For proper installation, this refrigerator must be placed on a solid and flat floor. This surface should be strong enough to support a fully loaded refrigerator. The rollers, which are not castors, should be only used for forward or backward movement. Moving the refrigerator sideways may damage your floor and the rollers.

0. 5°

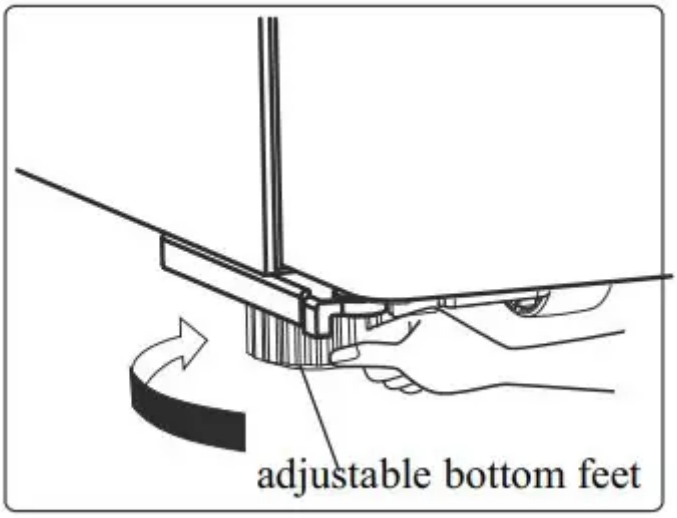
adjustable bottom feet

Before you use the product, please check the handle of the refrigerator. If the handle is loose, you should fix it with the hexangular screwdriver in the clockwise direction, then it can be used normally.

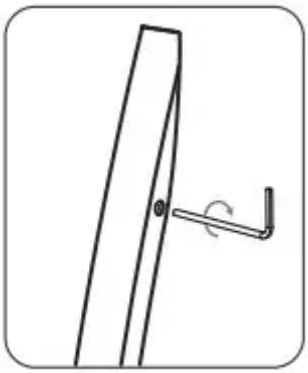

Description of the appliance

View of the appliance

1. Freezer zone LED light 2. Wind channel cover in freezer 3. Freezer door basket 4. Freezer shelf 5. Moveable twist ice-maker (optional) 6. Freezer door gasket 7. Freezer drawer 8. Freezer door basket (two-star zone) 9. Adjustable feet		10. French zone LED light 11. Wind channel cover in fresh 12. Water tank 13. Bottle rack (optional, not for HR6SBSFF624W) 14. Fresh shelf 15. Fresh door basket 16. Fruit and vegetables Crisper 17. Fresh door gasket 18. Bottle holder (optional)

Note: Due to unceasing modification of our products, your refrigerator may be slightly different from this Instruction Manual but its functions and using methods remain the same.

Display controls

Use your appliance according to the following control guidelines. Your appliance has the corresponding functions and modes as the control panels shown in the pictures below. When the appliance is powered on for the first time, the backlisting of the icons on the display panel starts working. Iff no buttons have been pressed and the doors are closed, the backlisting will turn off after 60s.

The control panel consists of 2 display areas showing temperature, 5 icons for different modes and 4 control button.

Controlling the temperature

We recommend that when you start your refrigerator for the first time, the temperature for the refrigerator is set to 5°C and the freezer to -18°C. If you want to change the temperature, follow the instructions below.

CAUTION! When you set a temperature, you set an average temperature for the whole refrigerator cabinet. Temperatures inside each compartment may vary from the temperatures displayed on the

panel, depending on how much food you store and where you place it. High or low room temperature may also affect the actual temperature inside the appliance.

1. Unlock 3s

All the buttons are locked if the icon "🔒" is illuminated. You can press the "**Unlock 3s**" button for 3 seconds to unlock the. You can press the "**Unlock 3s**" button for 3 seconds to lock all the buttons when you finish temperature setting.

2. Fridge

After fridge temperature setting is activated, press "Fridge" button to set fridge temperature between 8°C and 2^{O}C as needed. And the control panel will display corresponding value according to the following sequence.

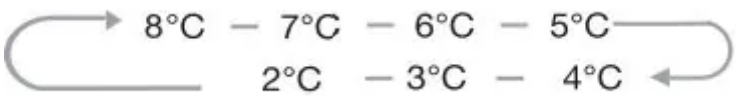

3. Freezer

After freezer temperature setting is activated, press "Freezer" button to set freezer temperature between -15°C and -25°C as needed. And the control panel will display corresponding value according to the following sequence.

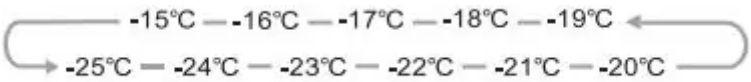

4. Mode

You can select different modes by pressing the "Mode" button. And the control panel will display corresponding mode according to the following sequence. When a certain mode is sellected, wait for the corresponding icon flash for 10 seconds. A buzzer will sound two times afterwards and the icon will be illuminated, which means the setting is completed.

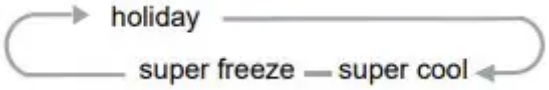

Super Cool can refrigerate your food much faster, keeping food fresh for a longer period.

When super cool function is on, the icon " " will be ulluminated. You can switch off super cool function by pressing "Fridge" or "Freezer" button and the refrigerator temperature setting will revert back to it's previous setting.

Super Freeze will quickly lower the temperature with the freezer so food will freeze faster. This can lock in the vitamins and nutrients of fresh food and keep food fresh longer.

- When the super freeze function is on, the "❄" icon will be illuminated.

- When cooling a full freezer of unfrozen food the superfreezer function will take around 24 hours to fully freeze all food items completely.
- Super freeze automatically switches off after 26 hours and the freezer temperature setting display -25°C.
- When super freêz function is on you can switch off super freeze function by pressing "Fridge" or "Freezer" button and the freezer temperature setting will revert back to it's previous setting.
  If you are going to be away for a long period of time, holiday function will be your best choice.
- When the holiday function is on, the " " icon will be illuminated.
- When the holiday function is activated, the temperature of the refrigerator is automatically switched to 15°C to minimize the energy consumption.
  Important! Do not store any food in the fridge during this time
- When the holiday function is on you can switch off holiday function by pressing "Fridge" or "Freezer" button and the freezer temperature setting will revert back to it's previous setting.

5. Alarm

In the case of alarm, icon " " will be on and there will be a buzzing sound.

Door alarm

- If the door of the fridge or freezer is open for over 2 minutes, the door alarm will sound. In case of door alarm, the buzzer will sound 3 times every 1 minute and will automatically stop alarming 10 minutes later.
- To save energy, please avoid keeping the door open for a long time when using the appliance. The door alarm can be cleared by closing the door.

Using your appliance

This section tells you how to use most of the useful features. We recommend that you read through them carefully before using the appliance.

1. Using your refrigerator compartment

The refrigerator compartment is suitable for storing meat, vegetables and fruit. It is recommended that food is packed in sealed containers or wrapped in polythene food wrap to avoid loosing moisture or allowing flavours to mix.

CAUTION! Never close the refrigerator door while the shelves, crisper and/or telescopic slides are extended. It may cause damage to the fridge.

Glass shelves and Door racks

The refrigerator compartment is provided with 5 glass shelves and several different door racks, which are suitable for the storage of eggs, canned liquid, bottled drinks and packed food. They can be placed at different heights according to your needs. Before removing the door shelves , please remove all food items to avoid spillage.

- When you remove the shelves, gently pull them forward until the shelf comes clear of the shelf guides.
- When you return the shelves, make sure there is no obstacle behind and gently push the shelf back into the position.

Crispers

The crispers, mounted on telescopic extension slides, is for storing vegetables and fruit. When you remove the crisper pull it forwards and lift off the sliders. Remember to remove all food first.

Once you have removed the drawers, ensure the slides are pushed back fully

Bottle holder operation

The bottle holder can be used to hold bottles, cans and tall containers in place. it can be used on the middle and lower door racks and can be moved side to side as required.

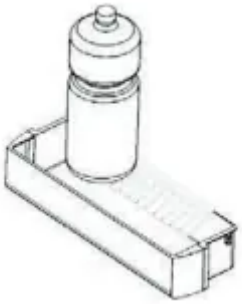

Note: All the door racks and covers are completely removeable for cleaning.

2. Using your freezer compartment

The freezer compartment is suitable for storage of foods required to be frozen, such as meat, ice cream and others.

Caution! Ensure that bottles are not left in the freezer for longer than needed as freezing may cause the bottle to break.

3. Using your ice box

- It is used for making ice and storing ice cubes.
- It is a removable accessory which can be taken out to save space. There is an ice maker cover to keep the ice maker clean.

Note: If the ice maker is used for the first time or has not been used for a long time, please clean it before using.

- Ice-making process

1. Place the integrative ice maker on level and take down the cover.
2. Pour water into the ice tray and the water level shall not exceed the top line as the follow picture shows.
3. Place the ice maker in its original position. When the ice cubes for direct use or drop off the ice cubes into the ice storing box for future use.

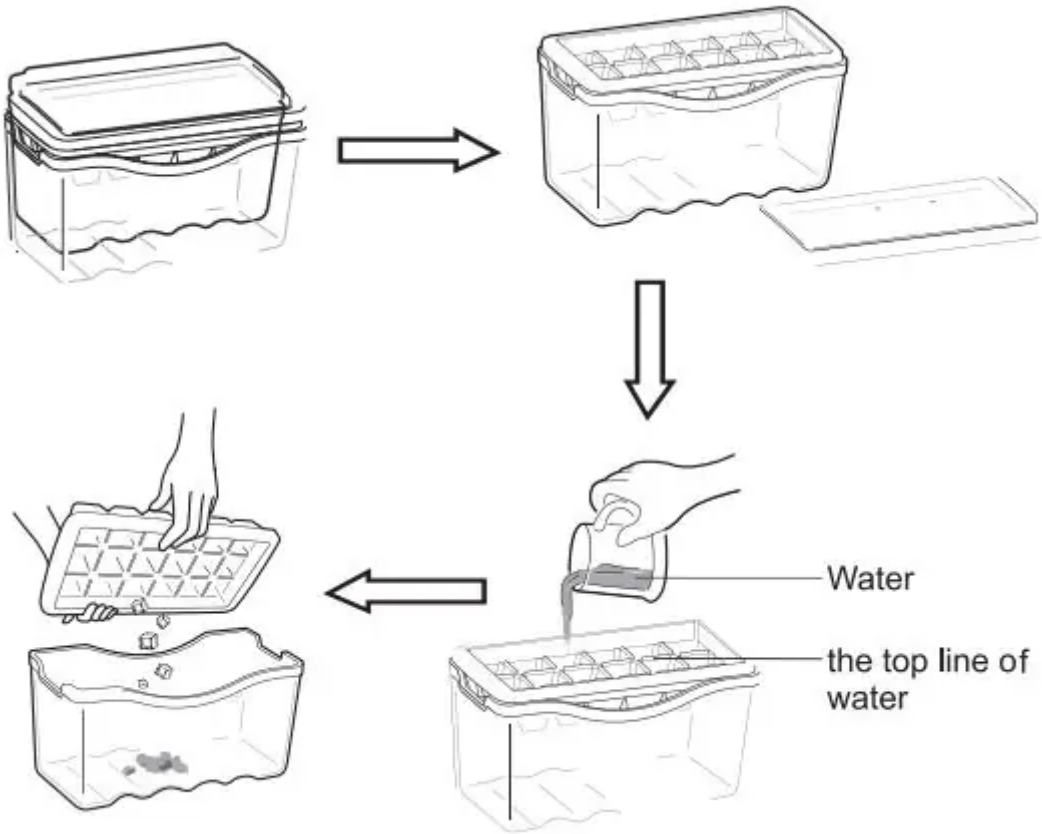

Drawers

The drawers, mounted on telescopic extension, can be used to store large quantities of frozen food.

The method of removal of the drawers is the same as the crisper in the refrigerator chamber.

4. Water dispenser

The water dispenser located in the fridge door, is for storing drinking water. With this appliance you can obtain chilled water easily without opening the refrigerator. You should be informed of following tips.

Before using

Before using this appliance for the first time, you should use it as follows.

1. Hold the two sides of the water tank tightly, lift up and put out of the water tank.
2. Unscrew the head, then clean head ,lids and the water tank.

Caution! Drain the water tank befor you take it down!

Assembling

After cleaning, please assemble the parts including the head, water tank and lids as follows:

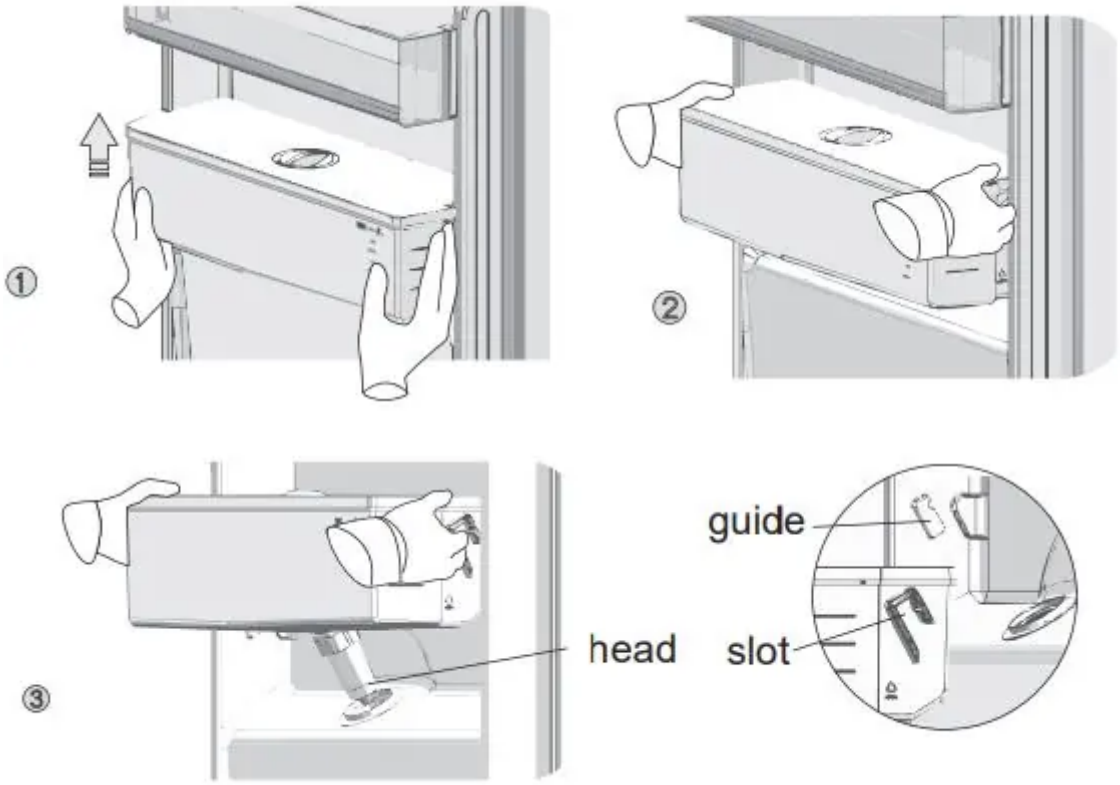

1. Put the seal ring in order first (the seal ring can not turn up), then insert the head into the hole.
2. Hold the two sides of the water tank tightly, fit the water tank along the guids on the door.
3. Push the two sides of the water tank downward as the picture shows.
4. When you hear clicks by both sides and at the same time the both sides of the water tank is closed to the door liner, It means the installation is completed.

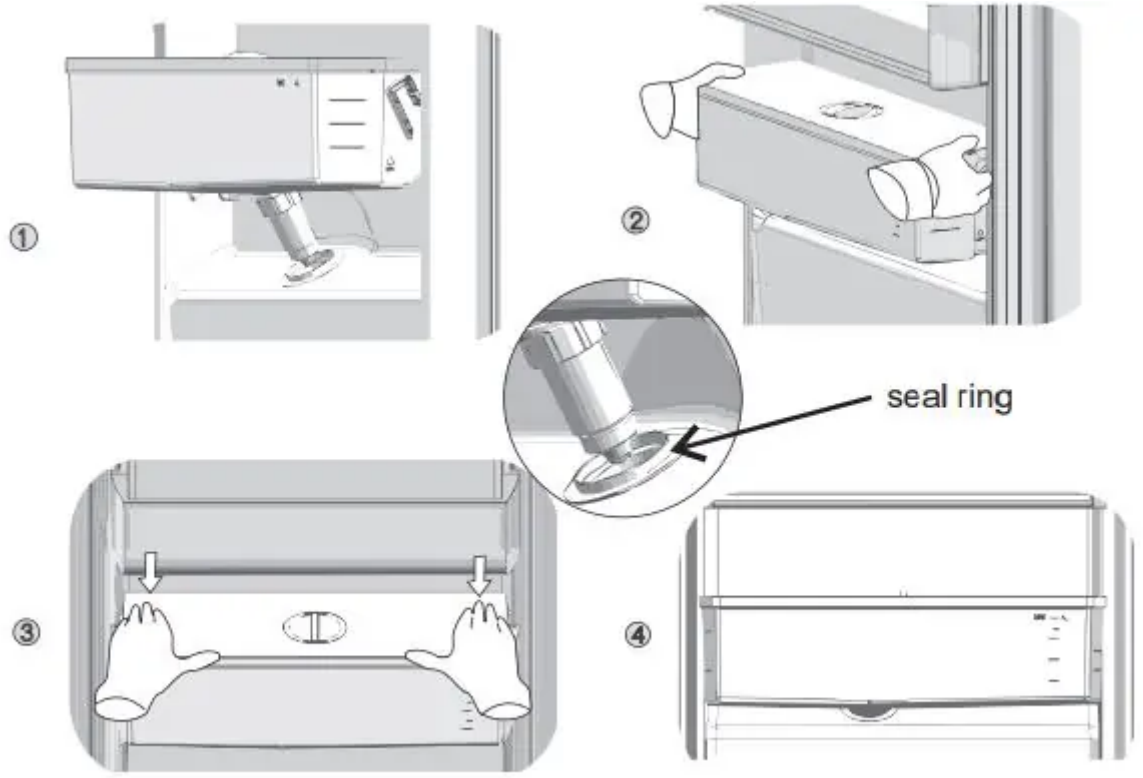

Filling water

Before you fill the drinking water into the water tank, ensure that the water tank is steady and in a correct position.

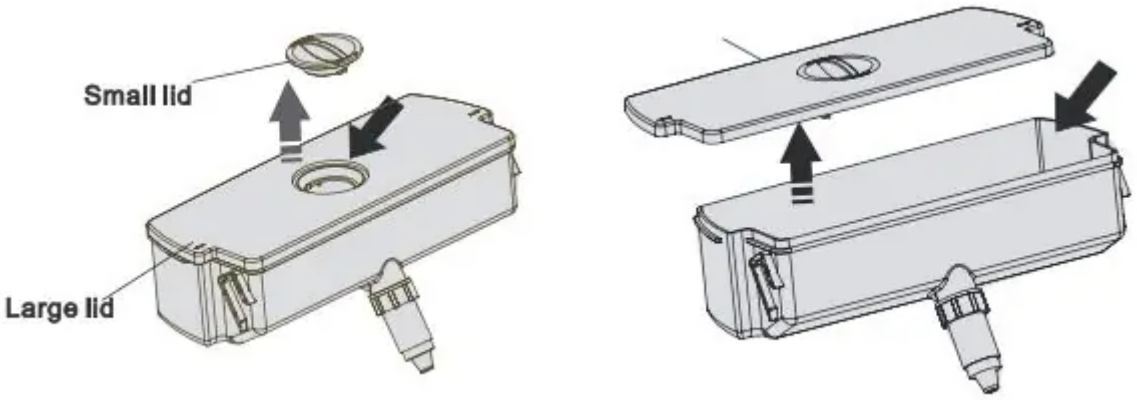

Caution!

Fill with water up to 4L (which is suggested) and not above the level.
Otherwise, it may overflow when the lids is closed.
We recommend that you fill the water by the following ways.

- Remove the small lid and fill water from the inlet of the larger lid.
- Remove the cover of the rank, and then fill water inside directly.

Warning! Don’t touch the other parts of the appliance when filling water, it may cause the water leakage.

Dispensing water

1. Make sure the cover of the water tank is fitted on.
2. Close the fridge door and check the dispenser.

Receiving Water

You should use the correct cups to receive water underneath the water dispenser. **Warning!** Don't push the dispenser lever forward without cup, it may cause water leakage from the dispenser.

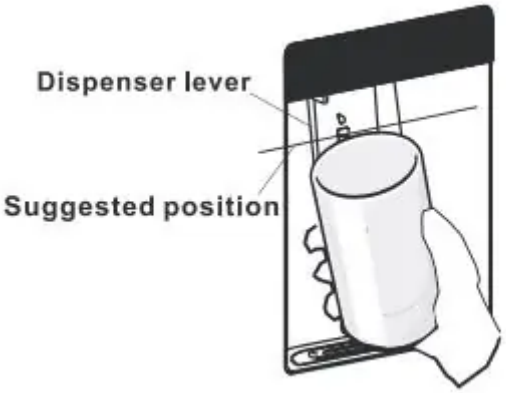

Cleaning

1. Put the water tank out of the door carefully and then wash the tank, lid, and head lightly in water.
2. After you have successfully cleaned the appliance, you should dry it fully. Also clear the receiving tank to avoid slillage.

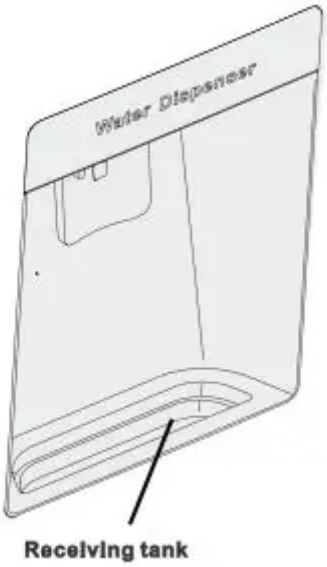

Helpful hints and tips

Energy saving tips

We recommend that you follow the tips below to save energy.

- Try to avoid keeping the door open for long periods in order to conserve energy.
- Ensure the appliance is away from any sources of heat. (Direct sunlight, electric oven or cooker etc.)
- Don't set the temperature colder than necessary.
- Don't store warm food or evaporative liquid in the appliance.
- Place the appliance in a well ventilated, humidity free, room. Please refer to Installing your new appliance chapter.
- The diagram shows the correct combination for the drawers, crisper and shelves. Do not adjust the combination as this is designed to be the most energy efficient configuration.

Hints for fresh food refrigeration

- Do not place hot food directly into the refrigerator, the internal temperature will increase resulting in the compressor having to work harder and will consume more energy.
- Do cover or wrap the food, particularly if it has a strong flavor.
- Place food properly so that air can circulate freely around it.

Hints for refrigeration

- Meat (All Types) Wrap in polythene food: wrap and place on the glass shelf above the vegetable drawer. Always follow food storage times and use by dates suggested by manufacturers.
- Cooked food, cold dishes, etc.: They should be covered and may be placed on any shelf.
- Fruit and vegetables: They should be stored in the special drawer provided.
- Butter and cheese: Should be wrapped inairtight foil or plastic film wrap.
- Milk bottles: Should have a lid and be stored in the door racks.

Hints for freezing

- When first starting-up or after a period out of use, let the appliance run at least 2 hours on the higher settings before putting food in the compartment.
- Prepare food in small portions to enable it to be rapidly and completely frozen and to make it possible to subsequently thaw only the quantity required.
- Wrap up the food in aluminum foil or polyethylene food wraps which are airtight.

- Do not allow fresh, unfrozen food to touch the food which is already frozen to avoid partially thawing the frozen food.
- Iced products, if consumed immediately after removal from the freezer compartment, will probably cause frost burns to the skin.
- It is recommended to label and date each frozen package in order to keep track of the storage time.

Hints for the storage of frozen food

- Ensure that frozen food has been stored correctly by the food retailer.
- Once defrosted，food will deteriorate rapidly and should not be re-frozen. Do not exceed the storage period indicated by the food manufacturer.

Switching off your appliance

If the appliance needs to be switched off for an extended period, the following steps should be taken prevent mould on the appliance.

1. Remove all food.
2. Remove the power plug from the mains socket.
3. Clean and dry the interior thoroughly.
4. Ensure that all the doors are wedged open slightly to allow air to circulate.

Cleaning and care

For hygienic reasons the appliance (including exterior and interior accessories) should be cleaned regularly at least every two months.

Caution! The appliance must not be connected to the mains during cleaning. Danger of electrical shock! Before cleaning switch the appliance off and remove the plug from the mains socket.

Exterior cleaning

To maintain good appearance of your appliance, you should clean it regularly:

- Wipe the digital panel and display panel with a clean, soft cloth.
- Spray water onto the cleaning cloth instead of spraying directly on the surface of the appliance. This helps ensure an even distribution of moisture to the surface.
- Clean the doors, handles and cabinet surfaces with a mild detergent and then wiped dry with a soft cloth.

Caution!

- Don't use sharp objects as they are likely to scratch the surface.

- Don't use Thinner, Car detergent, Clorox, ethereal oil, abrasive cleansers or organic solvent such as Benzene for cleaning. They may damage the surface of the appliance and may cause fire.

Interior cleaning

You should clean the appliance interior regularly. It will be easier to clean when food stocks are low.

- Wipe the inside of the fridge freezer with a weak solution of bicarbonate of soda, and then rinse with warm water using a wrung-out sponge or cloth.
- Wipe completely dry before replacing the shelves and baskets. Thoroughly dry all surfaces and removable parts. Although this appliance automatically defrosts, a layer of frost may occur on the refrigerator's interior walls if the door is opened frequently or kept opentoo long. If the frost is too thick wait until food stocks are low and proceed as follows:

  1. Remove existing food and accessories baskets, unplug the appliance from the mains power and leave the doors open. Ventilate the room thoroughly to accelerate the thawing process.
  2. When defrosting is completed, clean your freezer as described above.

Caution! Don't use sharp objects to remove frost from the refrigerator. Only after the interior is completely dry should the appliance be switched back on and plugged back into the mains socket.

Door seal cleaning

Take care to keep door seals clean. Sticky food and drinks can cause seals to stick to the cabinet and tear when you open the door. Wash seal with a mild detergent and warm water. Rinse and dry it thoroughly after cleaning.

Caution! Only after the door seals are completely dry should the appliance be powered on.

Replacing the LED light

Warning: The LED light should not be replaced by the user. If the LED light is faulty, contact the customer helpline for assistance. To replace the LED light, the following steps an be used:

1. Unplug your appliance.
2. Remove light cover by pushing up and out.
3. Hold the LED cover with one hand and pull it with the other hand while pressing the connector latch.
4. Replace LED light and snap it correctly in to place.

Troubleshooting

If you experience a problem with your appliance or are concerned that the appliance is not functioning correctly, you can carry out some easy checks before calling for service, please see below. You can carry out some easy checks according to this section before calling for service.

Warning! Don't try to repair the appliance yourself. If the problem persists after you have made the checks mentioned below, contact a qualified electrician, authorized service engineer or the shop where you purchased the product.

Problem	Possible cause & Solution
Appliance is not working correctly	Check whether the power cord is plugged into the power outlet properly.
	Check the fuse or circuit of your power supply, replace if necessary.
	The ambient temperature is too low. Try setting the chamber temperature to a colder level to solve this problem.
	It is normal that the refrigerator is not operating during the automatic defrost cycle, or for a short time after the appliance is switched on to protect the compressor.
Odours from the compartments	The interior may need to be cleaned.
	Some food, containers or wrapping cause odours.
Noise from the appliance	The sounds below are quite normal: • Compressor running noises. • Air movement noise from the small fan motor in the fridge compartment or other compartments. • Gurgling sound similar to water boiling. • Popping noise during automatic defrosting. • Clicking noise before the compressor starts.
	Other unusual noises are due to the reasons below and may need you to check and take action: • The cabinet is not level. • The back of appliance touches the wall. • Bottles or containers fallen or rolling.
The motor runs continuously	It is normal to frequently hear the sound of the motor, it will need to run more when in following circumstances: • Temperature setting is set colder than necessary • A large quantity of warm food has recently been stored within the appliance. • The temperature outside the appliance is too high. • Doors are kept open too long or too often.

	• After your installing the appliance or it has been switched off for a long time.
A layer of frost occurs in the compartment	Check that the air outlets are not blocked by food and ensure food is placed within the appliance to allow sufficient ventilation. Ensure that door is fully closed. To remove the frost, please refer to cleaning and care chapter.
Temperature inside is too warm	You may have left the doors open too long or too frequently; or the doors are kept open by some obstacle; or the appliance is located with insufficient clearance at the sides, back or top.

Warning

This content is compiled from multiple sources and is provided for reference purposes only. It may not be complete or fully applicable to all situations. If you are unable to resolve your issue, please contact the product manufacturer or an authorized service provider for official support.

Document generated by ManualsFile