Form No. 3464-976 Rev A

TORO®

Count on it.

Operator's Manual

E-Z Vac™ Complete Twin Bagger

TimeCutter® HD and Titan® Riding Mower

Model No. 79345—Serial No. 415204500 and Up
Model No. 79346—Serial No. 415186600 and Up

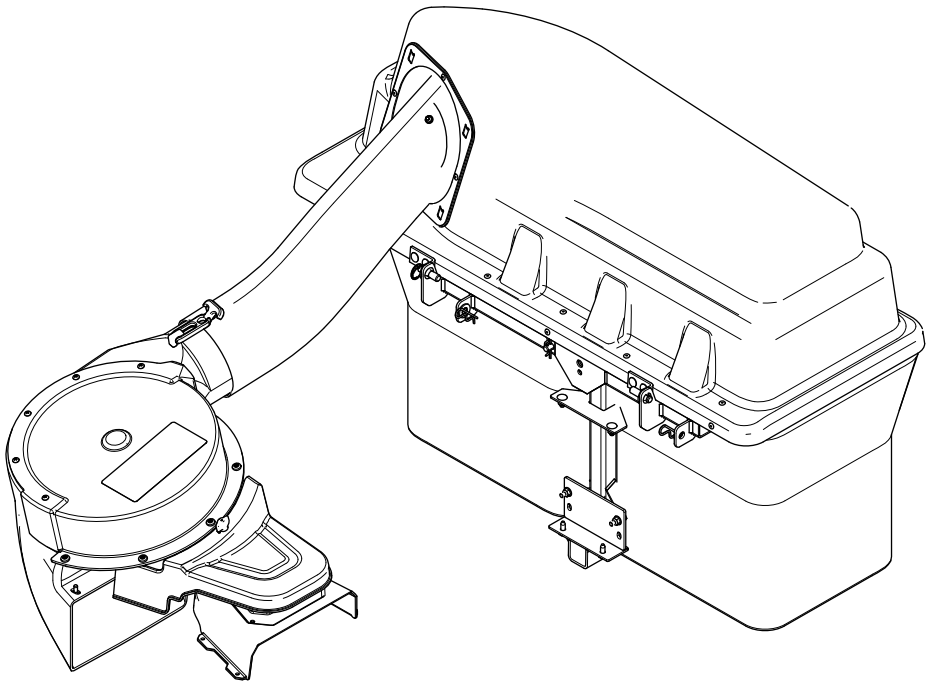

Register at www.Toro.com.
Original Instructions (EN)

CE UK CA

3464-976

⚠ WARNING

CALIFORNIA
Proposition 65 Warning

Use of this product may cause exposure to chemicals known to the State of California to cause cancer, birth defects, or other reproductive harm.

Introduction

Read this information carefully to learn how to operate and maintain your product properly and to avoid injury and product damage. You are responsible for operating the product properly and safely.

Visit www.Toro.com for product safety and operation training materials, accessory information, help finding a dealer, or to register your product.

Whenever you need service, genuine Toro parts, or additional information, contact an Authorized Service Dealer or Toro Customer Service and have the model and serial numbers of your product ready. Figure 1 identifies the location of the model and serial numbers on the product. Write the numbers in the space provided.

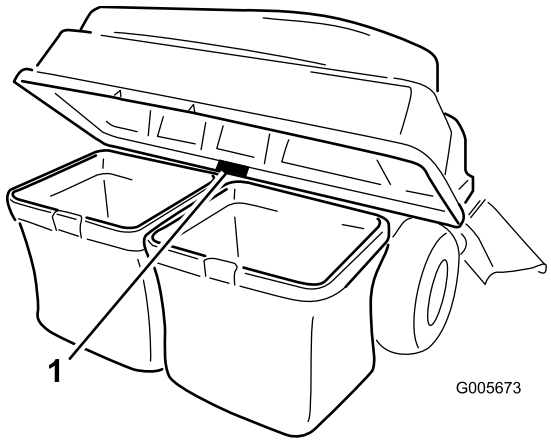

g005673

Figure 1

1. Model and serial number location

Model No. _____

Serial No. _____

This manual uses 2 words to highlight information. **Important** calls attention to special mechanical information and **Note** emphasizes general information worthy of special attention.

The safety-alert symbol (Figure 2) appears both in this manual and on the machine to identify important safety messages that you must follow to avoid accidents. This symbol will appear with the word **Danger**, **Warning**, or **Caution**.

- **Danger** indicates an imminently hazardous situation which, if not avoided, **will** result in death or serious injury.
- **Warning** indicates a potentially hazardous situation which, if not avoided, **could** result in death or serious injury.
- **Caution** indicates a potentially hazardous situation which, if not avoided, **may** result in minor or moderate injury.



sa-black

Figure 2

1. Safety-alert symbol

Contents

Safety 3
Towing Safety 4
Safety and Instructional Decals 5
Setup 6
1 Preparing the Machine 7
2 Installing the Weight 7
3 Removing the Grass Deflector and Belt Cover 8
4 Installing the Baffle and Blower Support 9
5 Installing the Pulley Assembly, Belt Cover, and Shoulder Bolt 11
6 Installing the Attachment Mount 11
7 Installing the Latch Rod 13
8 Assembling the Bagger Top 14
9 Assembling the Grass Bags 15
10 Installing the Bagger Top 15
11 Installing the Blower Assembly 16
12 Installing the Blower Belt and Powered Bagger Cover 17
13 Installing the Discharge Tubes 18
Operation 21
Emptying the Grass Bags 21
Clearing Obstructions from the Bagger 22
Removing the Bagger 22
Operating Tips 23
Maintenance 24
Recommended Maintenance Schedule(s) 24

© 2023—The Toro® Company
8111 Lyndale Avenue South
Bloomington, MN 55420

Contact us at www.Toro.com.
Printed in the USA
All Rights Reserved

Preparing for Maintenance 24
Cleaning the Hood Screen 24
Cleaning the Bagger and Bags 25
Inspecting the Blower Belt 25
Replacing the Blower Belt 25
Inspecting the Bagger 25
Inspecting the Mower Blades 25
Storage 26
Storing the Bagger Attachment 26
Troubleshooting 27

Safety

⚠ WARNING

When the bagger is in operation, the blower is rotating and can cut off or injure hands and fingers.

- **Before adjusting, cleaning, repairing, and inspecting the blower, and before unclogging the chute, shut off the engine and wait for all moving parts to stop. Remove the key.**
- **Use a stick, not your hands, to remove an obstruction from the blower and tube.**
- **Keep hands and feet away from moving parts. Do not make adjustments with the engine running.**

⚠ WARNING

Debris, such as leaves, grass, or brush can catch fire. A fire in the engine area can cause personal injury and property damage.

- **Keep the engine and muffler area free of debris accumulation.**
- **Take care when opening the bagger cover to keep debris from falling onto the engine and muffler area.**
- **Allow the machine to cool before storing it.**

- Become familiar with the safe operation of the equipment, with the operator controls, and safety signs.
- Use extra care with grass catchers or other attachments. These can change the operating characteristics and the stability of the machine.
- Follow the manufacturer's recommendations for adding or removing wheel weights or counterweights to improve stability.
- Do not use a grass catcher on steep slopes. A heavy grass catcher could cause loss of control or overturn the machine.
- Slow down and use extra care on hillsides. Be sure to travel in the recommended direction on hillsides. Turf conditions can affect the stability of the machine. Use extreme caution while operating near drop-offs.
- Keep all movement on slopes slow and gradual. Do not make sudden changes in speed, direction, or turning.
- The grass catcher can obstruct the view to the rear. Use extra care when operating in reverse.

- Use care when loading or unloading the machine into a trailer or truck.
- Never operate with the discharge deflector raised, removed or altered, unless using a grass catcher.
- Keep hands and feet away from moving parts. Do not make adjustments with the engine running.
- Park the machine on level ground, disengage the drives, chock the wheels, and shut off the engine before leaving the operator's position for any reason including emptying the grass catcher or unclogging the chute.
- If you remove the grass catcher, be sure to install any discharge deflector or guard that might have been removed to install the grass catcher. Do not operate the mower without either the entire grass catcher or the grass deflector in place.
- Shut off the engine before removing the grass catcher or unclogging the chute.
- Do not leave grass in the grass catcher for extended periods of time.
- Grass catcher components are subject to wear, damage and deterioration, which could expose you to moving parts or allow objects to be thrown. Frequently check components and replace with the manufacturer's recommended parts, when necessary.

Towing Safety

- Do not attach towed equipment except at the hitch point.
- Follow the attachment manufacturer's recommendation for weight limits for towed equipment and towing on slopes.
- Never allow children or others in or on towed equipment.
- On slopes, the weight of the towed equipment may cause loss of traction and loss of control. Reduce towed weight and slow down.
- Stopping distance increases with the weight of the towed load. Travel slowly and allow extra distance to stop.
- Make wide turns to keep the attachment clear of the machine.
- Do not tow a load that weighs more than the towing machine.

Safety and Instructional Decals

Safety decals and instructions are easily visible to the operator and are located near any area of potential danger. Replace any decal that is damaged or missing.

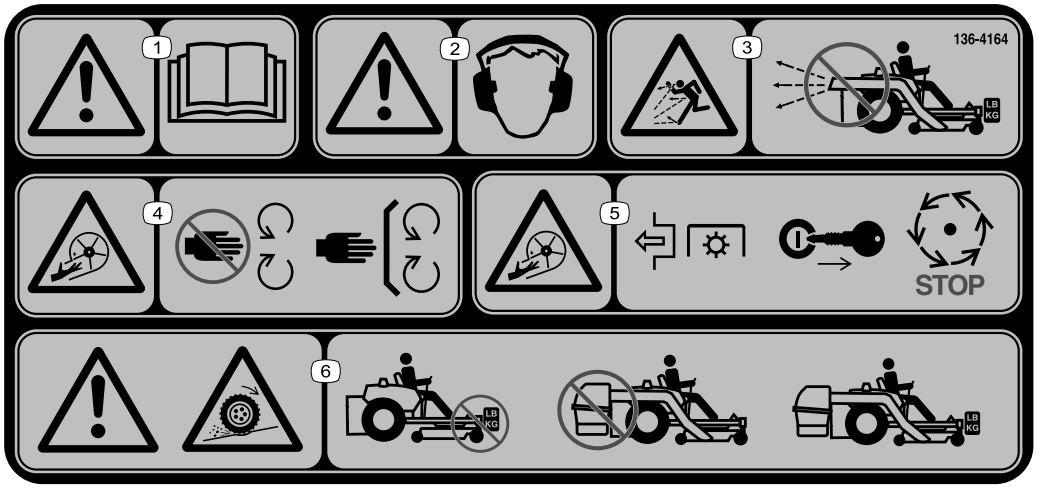

decal136-4164

136-4164

1. Warning—read the *Operator's Manual*.
2. Warning—hearing protection must be worn.
3. Thrown object hazard—do not operate the blower without the entire system installed and latched.
4. Cutting/dismemberment hazard, impeller—keep away from moving parts; keep all guards and covers in place.
5. Cutting/dismemberment hazard, impeller—disengage the PTO, remove the key, and wait for all moving parts to stop.
6. Warning; loss of traction—do not operate with only counterbalance weights installed; do not operate with only E-Z Vac installed; operate only with both E-Z Vac and counterbalance weights installed.

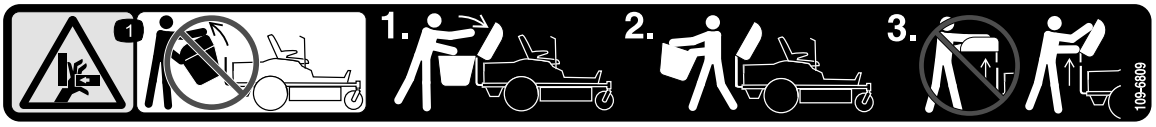

decal109-6809

109-6809

1. Crushing hazard of hand—do not remove the whole bagger from the machine; open the bagger top and then remove the bag(s) from the bagger. Do not remove the bagger top when it is closed; open the bagger top and then remove it.



decal133-8061

133-8061

Setup

Loose Parts

Use the chart below to verify that all parts have been shipped.

Procedure	Description	Qty.	Use
1	No parts required	–	Prepare the machine.
2	Weight tray Left weight-tray mount Right weight-tray mount Suitcase weight—16 kg (35 lb) Retaining rod Bolt (3/8 x 1-1/4 inches) Flange nut (3/8 inch) Carriage bolt (3/8 x 1 inch) Self-tapping bolt (5/16 x 3/4 inch)	1 1 1 1 1 2 4 2 2	Install the weight.
3	No parts required	–	Remove the grass deflector and belt cover.
4	Blower support Hex washer-head screw (3/8 x 3/4 inch) Baffle Carriage bolt (5/16 x 3/4 inch) Flange nut (5/16 inch)	1 2 1 4 4	Install the baffle and blower support.
5	Pulley assembly Belt cover	1 1	Install the pulley assembly and belt cover.
6	Stabilizer bracket Carriage bolt (5/16 x 3/4 inch) Locknut (5/16 inch) Self-tapping screw (5/16 x 3/4 inch) Bolt (5/16 x 1 inch) Pivot frame Hairpin cotter Rod Washer	1 2 4 2 2 1 2 2 2	Install the attachment mount.
7	Latch rod Hairpin cotter	1 1	Install the latch rod.
8	Bagger top Bagger screen Hairpin cotter	1 1 2	Assemble the bagger top.
9	Bag frame Grass bag	2 2	Assemble the grass bags.
10	Grass bag assembly	2	Install the bagger top.
11	Blower assembly	1	Install the blower assembly.
12	Powered bagger cover Blower belt	1 1	Install the blower belt and powered bagger cover.

Procedure	Description	Qty.	Use
13	Upper tube	1	Install the discharge tubes.
	Screw (1/4 x 3/4 inches)	2	
	Washer (1/4 inch)	2	
	Locknut (1/4 inch)	2	
	Lower tube	1	

Determine the left and right sides of the machine from the normal operating position.

1

Preparing the Machine

No Parts Required

Procedure

Perform the following procedure to prepare the machine for attaching the blower and finishing kit.

1. Park the machine on a level surface.
2. Disengage the blade-control switch, engage the parking brake, and move the motion-control levers outward to the NEUTRAL-LOCK position.
3. Shut off the engine and remove the key.
4. Ensure that the machine is secure from movement before you begin to work on it.
5. Repair all bent or damaged areas of machine deck and replace any missing parts.
6. Clean the machine of any debris on the machine deck or rear part of the machine to ease installation.

2

Installing the Weight

Parts needed for this procedure:

1	Weight tray
1	Left weight-tray mount
1	Right weight-tray mount
1	Suitcase weight—16 kg (35 lb)
1	Retaining rod
2	Bolt (3/8 x 1-1/4 inches)
4	Flange nut (3/8 inch)
2	Carriage bolt (3/8 x 1 inch)
2	Self-tapping bolt (5/16 x 3/4 inch)

Procedure

⚠ CAUTION

The bagger changes the weight distribution of the machine. Operating the machine without the front weights may cause an unstable condition, which could result in a loss of control.

Ensure that the front weights are properly installed before operating the machine with the bagger attachment.

1. Remove the existing bolt and nut from the left and right side of the platform where you will install the weight-tray mounts.
2. Use the 2 self-tapping bolts (5/16 x 3/4 inch), 2 bolts (3/8 x 1-1/4 inches), and flange nuts (3/8 inch) to secure the left and right weight-tray mounts to the machine (Figure 3).

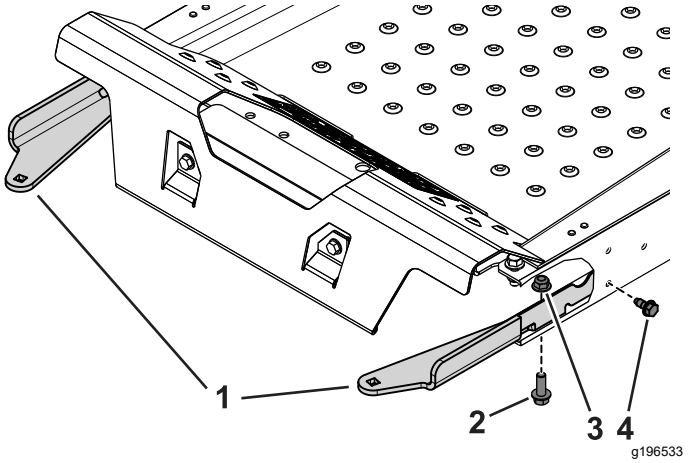

Figure 3
Cutaway view

1. Weight-tray mounts
2. Bolt (3/8 x 1-1/4 inches)
3. Flange nut (3/8 inch)
4. Self-tapping bolt (5/16 x 3/4 inch)

3. Use the 2 carriage bolts (3/8 x 1 inch) and flange nuts to secure the weight tray to the mounts (Figure 4).

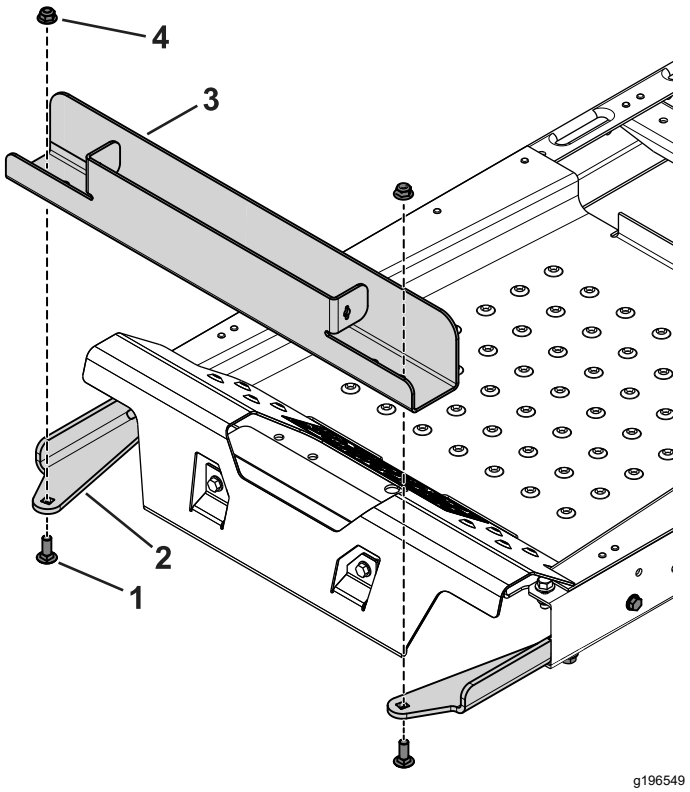

Figure 4

1. Carriage bolt (3/8 x 1 inch)
2. Weight-tray mount
3. Weight tray
4. Flange nut (3/8 inch)

4. Insert the suitcase weight into the weight tray with the groove side facing toward the front of the machine (Figure 5).

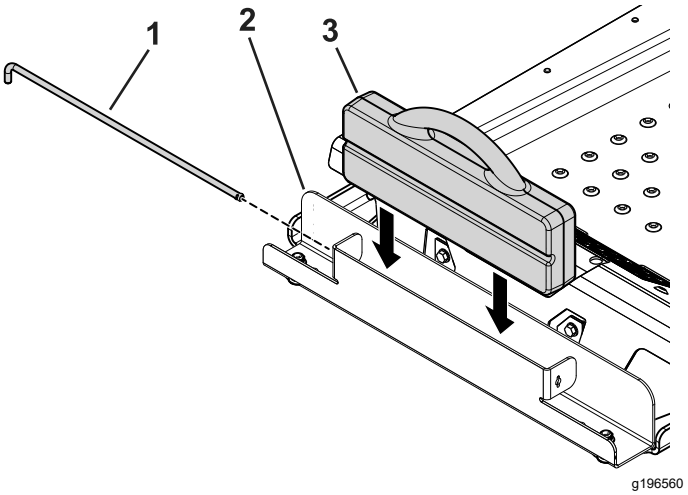

Figure 5

1. Retaining rod
2. Weight tray
3. Suitcase weight

5. Insert the retaining rod into the tray and rotate it into the locked position (Figure 5).

Important: **Remove the suitcase weight whenever you remove the bagger attachment.**

3

Removing the Grass Deflector and Belt Cover

No Parts Required

Procedure

⚠ WARNING

An uncovered discharge opening could allow the machine to throw objects toward you or bystanders and result in serious injury. Also, contact with the blade could occur.

Never operate the lawn mower unless you install a mulch plate, discharge deflector, or grass-collection system.

Inspect the grass deflector for damage before each use. Replace any damaged parts before use.

1. Disengage the spring from the notch in the deflector bracket and remove the cotter pin (CE models only), slide the rod out of the welded deck brackets, spring, and discharge deflector (Figure 6).

Note: Your chute may look different than the one pictured.

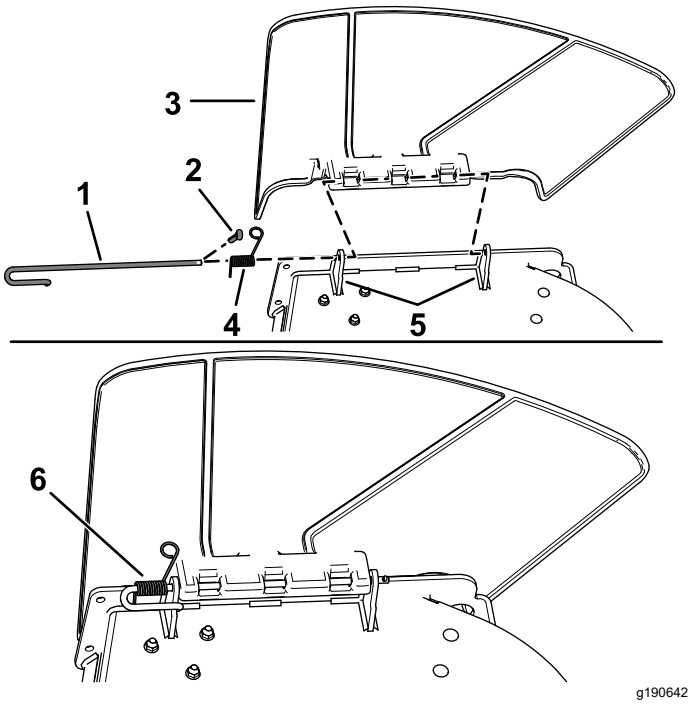

Figure 6

1. Rod
2. Cotter pin (CE models only)
3. Deflector
4. Spring
5. Deck brackets
6. Spring installed over the rod

2. Remove the deflector (Figure 6).
3. Remove the 4 screws (1/4 x 1/2 inch) securing the right belt cover, and remove the belt cover (Figure 7).

   Note: Retain the 4 screws (1/4 x 1/2 inch) for installation in Procedure 5 Installing the Pulley Assembly, Belt Cover, and Shoulder Bolt (page 11).

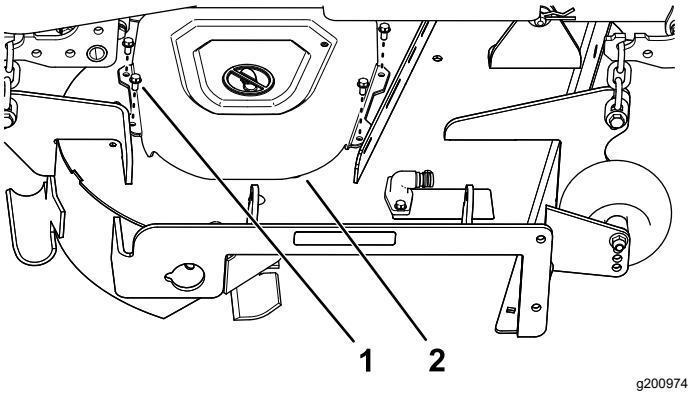

Figure 7

1. Screw (1/4 x 1/2 inch)
2. Belt cover

4

Installing the Baffle and Blower Support

Parts needed for this procedure:

1	Blower support
2	Hex washer-head screw (3/8 x 3/4 inch)
1	Baffle
4	Carriage bolt (5/16 x 3/4 inch)
4	Flange nut (5/16 inch)

Procedure

1. Install the blower support to the mower deck using 2 hex washer-head screws (3/8 x 3/4 inch) as shown in Figure 8.

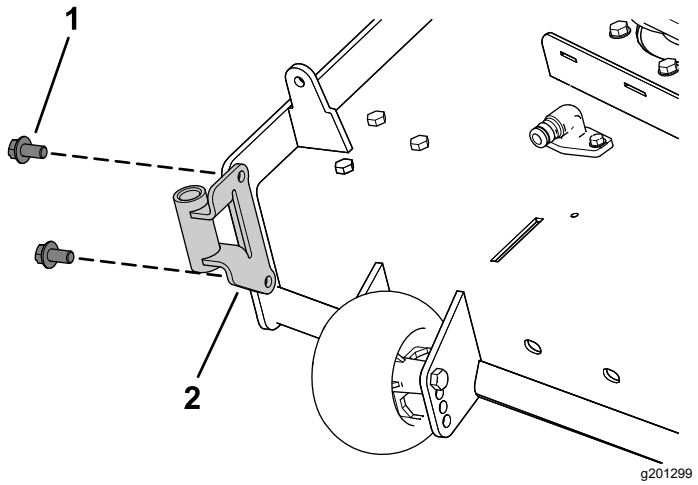

Figure 8

1. Hex washer-head screw (3/8 x 3/4 inch)
2. Blower support

2. Remove the existing bolt and nut from the mower deck (Figure 9).

   Important: **For 48-inch and 60-inch mower decks, there is only one bolt and nut that you can remove.**

   For 54-inch mower deck, remove the bolt and nut as shown in Figure 9.

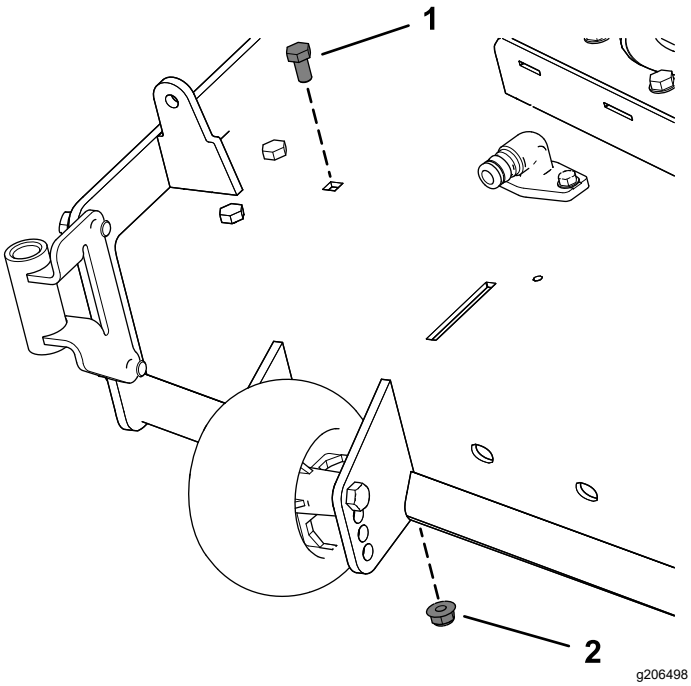

Figure 9

1. Existing bolt
2. Existing nut

3. Install the left side of the baffle using a carriage bolt (5/16 x 3/4 inch) and flange nut (5/16 inch) as shown in Figure 10.
4. Loosen the 2 carriage bolts (5/16 x 3/4 inch) in the baffle slots, and slide the baffle until the hole aligns with the hole in the mower deck (Figure 10).
5. Install baffle as shown in Figure 10.

   Important: **Ensure that you use the correct hole for the baffle; refer to Figure 10.**
6. Tighten the 2 carriage bolts (5/16 x 3/4 inch) in the baffle slots (Figure 10).

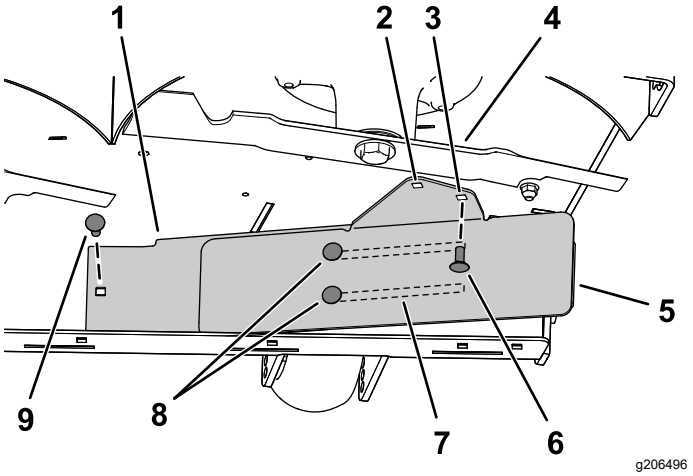

Figure 10

54-inch mower deck shown

1. Inner baffle
2. Hole for **48-inch and 60-inch** mower deck installation.
3. Hole for **54-inch** mower deck installation.
4. Right blade
5. Outer baffle
6. Install this carriage bolt (5/16 x 3/4 inch) and flange nut (5/16 inch) after sliding the baffle.
7. Slots in the baffle
8. Loosen these 2 carriage bolts (5/16 x 3/4 inch) and 2 flange nut (5/16 inch).
9. Install this carriage bolt (5/16 x 3/4 inch) and flange nut (5/16 inch) first.

5

Installing the Pulley Assembly, Belt Cover, and Shoulder Bolt

Parts needed for this procedure:

1	Pulley assembly
1	Belt cover

Procedure

1. Remove the nut and washer from the right mower deck pulley.
2. Install the pulley assembly to the right mower deck pulley with the previously removed nut and washer (Figure 11).

   Important: **For 48-inch mower decks, use the small blower pulley.**

   For 54-inch and 60-inch mower decks, use the large blower pulley.
3. Torque the nut to 136 to 149 N·m (100 to 110 ft-lb).

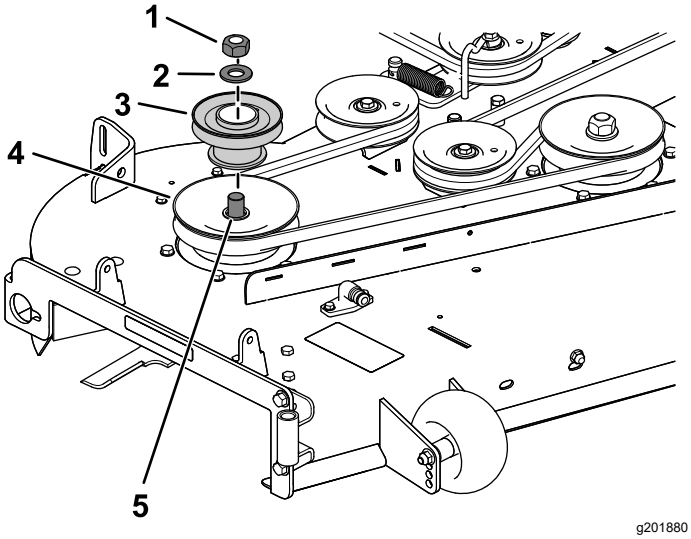

Figure 11

54-inch mower deck shown

1. Existing pulley nut
2. Existing washer
3. Blower pulley
4. Existing deck (spindle) pulley
5. Spindle

4. Install the new belt cover over the pulley assembly using the 4 previously removed screws (1/4 x 1/2 inch) as shown in Figure 12.

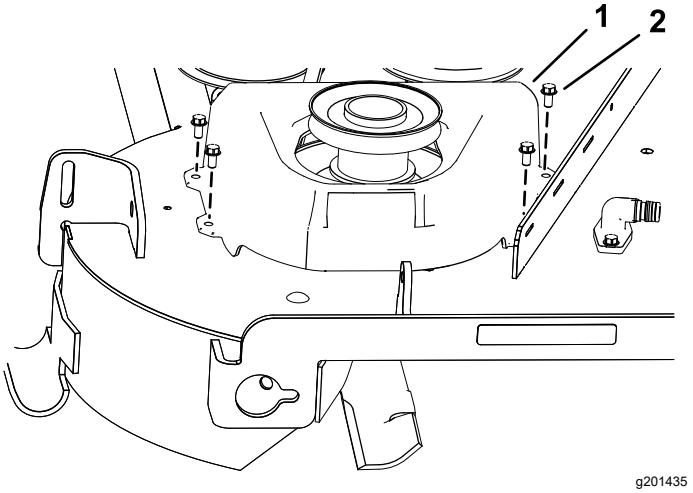

Figure 12

1. Belt cover
2. Screw (1/4 x 1/2 inch)

6

Installing the Attachment Mount

Parts needed for this procedure:

1	Stabilizer bracket
2	Carriage bolt (5/16 x 3/4 inch)
4	Locknut (5/16 inch)
2	Self-tapping screw (5/16 x 3/4 inch)
2	Bolt (5/16 x 1 inch)
1	Pivot frame
2	Hairpin cotter
2	Rod
2	Washer

Procedure

1. Remove the existing 2 bolts, 2 nuts, and hitch bracket from the bottom of the engine guard (Figure 13).

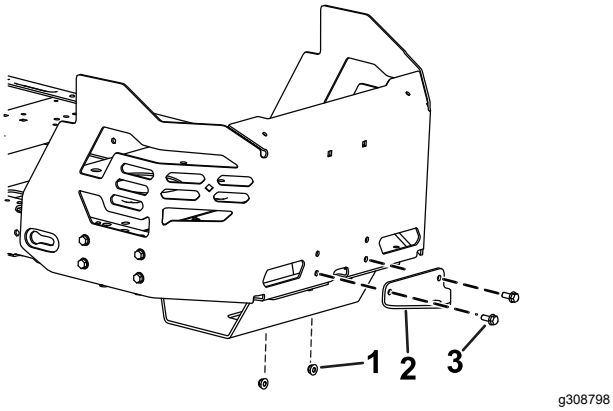

Figure 13

1. Nut
2. Existing hitch bracket
3. Bolt

2. Install the stabilizer bracket to the engine guard using 2 carriage bolts (5/16 x 3/4 inch) and 2 locknuts (5/16 inch) as shown in Figure 14.

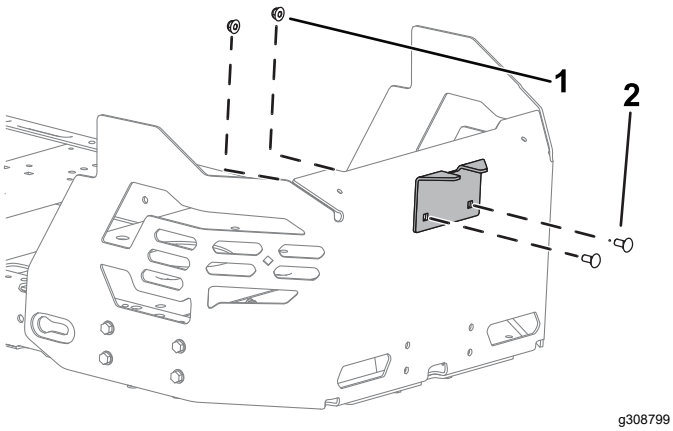

Figure 14

1. Locknut (5/16 inch)
2. Carriage bolt (5/16 x 3/4 inch)

3. Remove the existing 2 self-tapping screws from the bottom of the machine frame (Figure 16).
4. Loosely install the pivot frame to the machine frame using 2 bolts (5/16 x 1 inch) and 2 locknuts (5/16 inch) as shown in Figure 15.

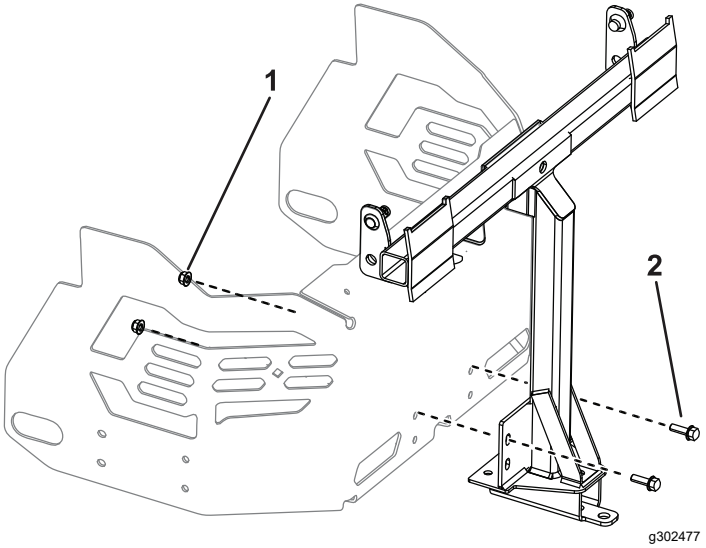

Figure 15

1. Locknut (5/16 inch)
2. Bolt (5/16 x 1 inch)

5. Position the pivot frame upward, and secure the pivot frame to the bottom of the machine frame using 2 self-tapping screws (5/16 x 3/4 inch) as shown in Figure 16.

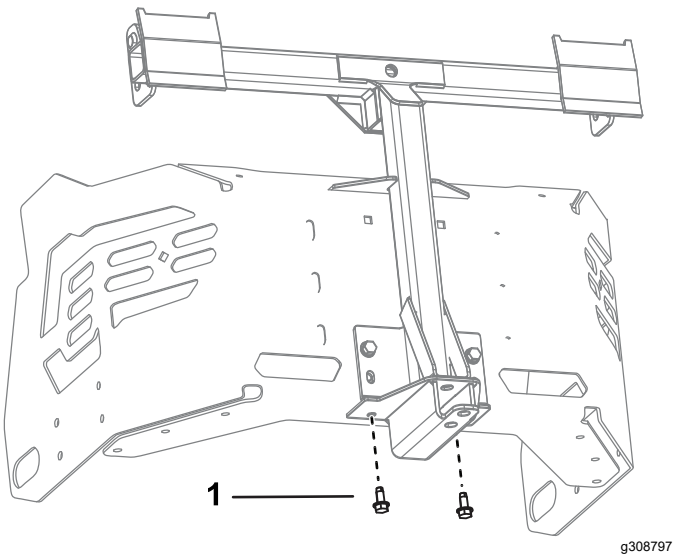

Figure 16

1. Self-tapping screw (5/16 x 3/4 inch)
2. Pivot frame

6. Tighten the 2 bolts (5/16 x 1 inch) and 2 locknuts (5/16 inch) as shown in Figure 15.
7. Install the bent, flared end of a rod into the keyed slot in the left side of the machine frame, and move the rod rearward to seat it in the frame (Figure 17).

   Note: Repeat this step for the right side of the machine.

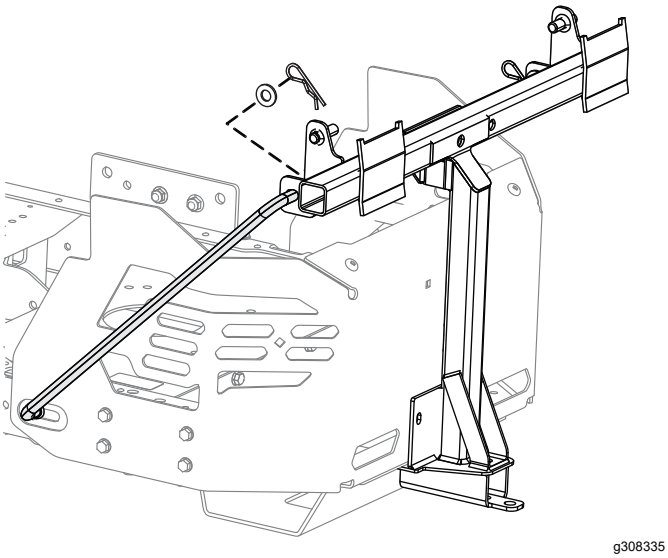

g308335

Figure 17
Left side shown

8. Insert the bent ends of the rods into the attachment mount as shown in Figure 17 and secure the end of each rod with a washer and hairpin cotter.

7

Installing the Latch Rod

Parts needed for this procedure:

1	Latch rod
1	Hairpin cotter

Procedure

Install the latch rod with a hairpin cotter (Figure 18).

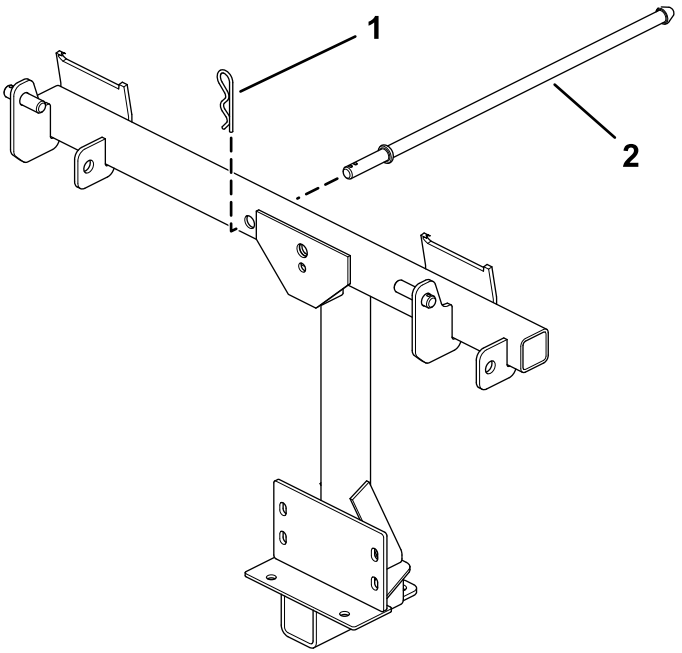

g201213

Figure 18

1. Hairpin cotter
2. Latch rod

8

Assembling the Bagger Top

Parts needed for this procedure:

1	Bagger top
1	Bagger screen
2	Hairpin cotter

Procedure

1. Turn the bagger top over.
2. Install the screen as shown in Figure 19 and ensure that it slopes down toward the collection bags.

   Note: Make sure that the screens snap into place and the tabs engage the bagger top.

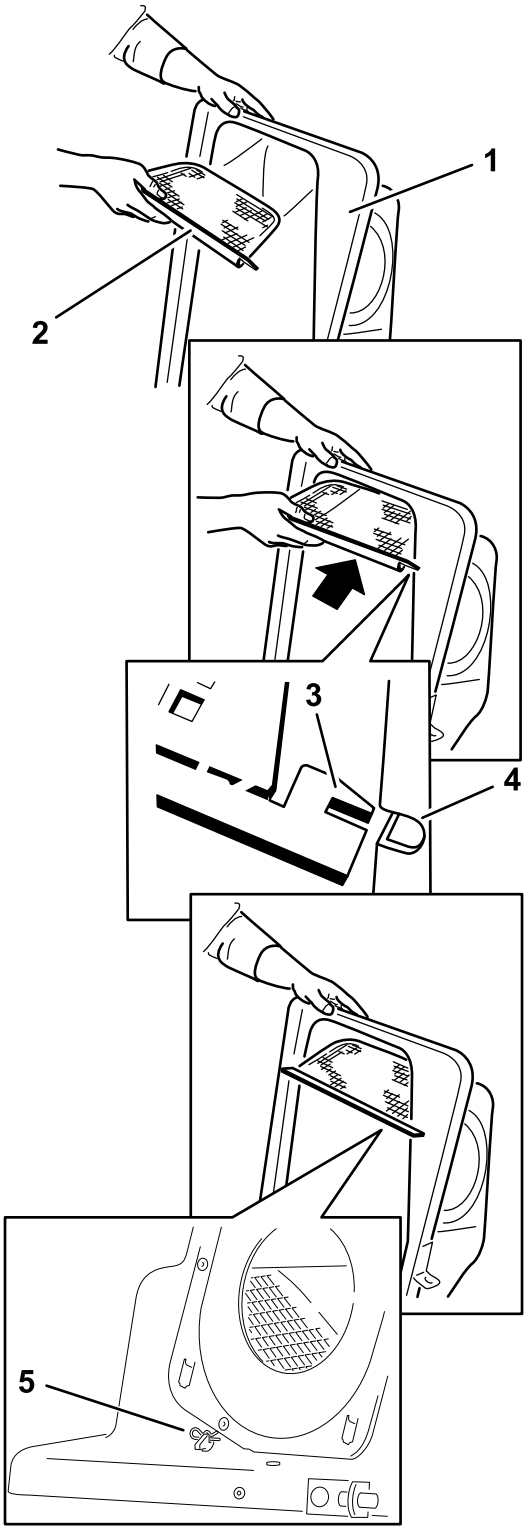

g201881

Figure 19

1. Bagger top
2. Screen
3. Screen tab
4. Slot in bagger top
5. Hairpin cotter

9

Assembling the Grass Bags

Parts needed for this procedure:

2	Bag frame
2	Grass bag

Procedure

Snap the 2 bag frames to the 2 grass bags.

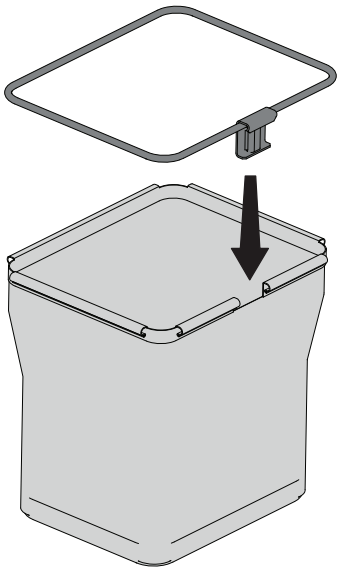

g453040

Figure 20

10

Installing the Bagger Top

Parts needed for this procedure:

2	Grass bag assembly

Procedure

1. Install the bagger top to the bagger frame.

   Note: Your bagger may look different than the one shown.

2. Slide the brackets over the posts in the bagger frame and install the circular cotter pin into the hole in the right hand post (Figure 21).
3. Rotate the bagger hood down to the operating position.

   Note: To remove the circular cotter pin, continue to rotate it in the same direction as installed.

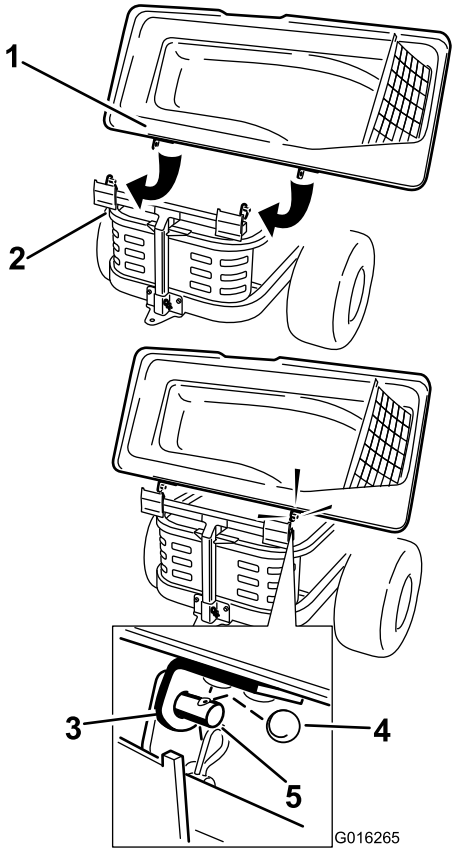

g016265

Figure 21

1. Bagger hood
2. Bagger frame
3. Bracket, bagger hood
4. Circular cotter pin
5. Post

4. Lift the bagger top and install the bags assembled in 9 Assembling the Grass Bags (page 15) by sliding the bag frame hooks onto the retaining brackets (Figure 22).

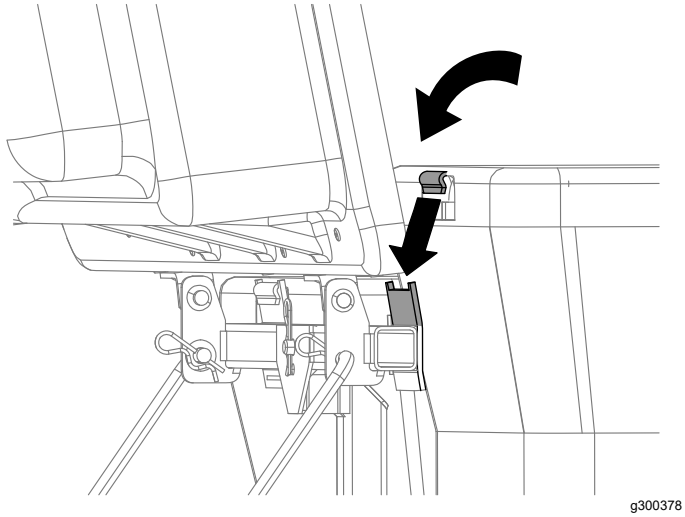

Figure 22

5. Lower the bagger top onto the bags (Figure 23).

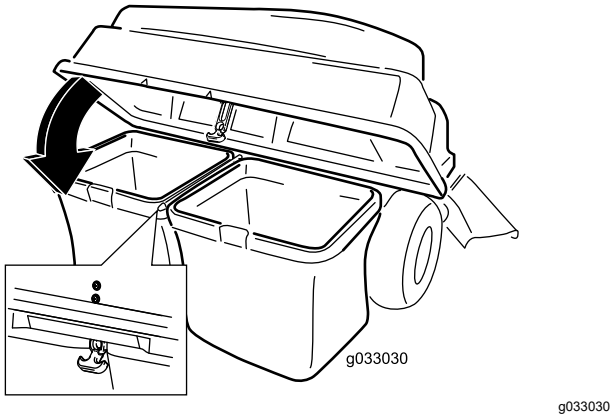

Figure 23

6. Secure the hood with the latch (Figure 23).

11

Installing the Blower Assembly

Parts needed for this procedure:

1	Blower assembly

Procedure

⚠ WARNING

An uncovered discharge opening allows the lawn mower to throw objects toward you or bystanders, resulting in serious injury. Also, contact with the blade could occur.

- **Never operate the lawn mower without a cover plate, a mulch plate, or a grass chute and catcher.**
- **Make sure that the grass deflector is installed when you remove the grass chute and catcher.**

Important: **Install the side-discharge chute when you remove the bagger and blower.**

Important: **Save all the hardware and the side-discharge chute.**

1. If necessary, install the belt onto the blower pulley (Figure 26).
2. Insert the blower pivot pin into the blower support and rotate the blower assembly inward toward the machine (Figure 24).

   Note: The blower assembly should automatically latch as shown in Figure 25.

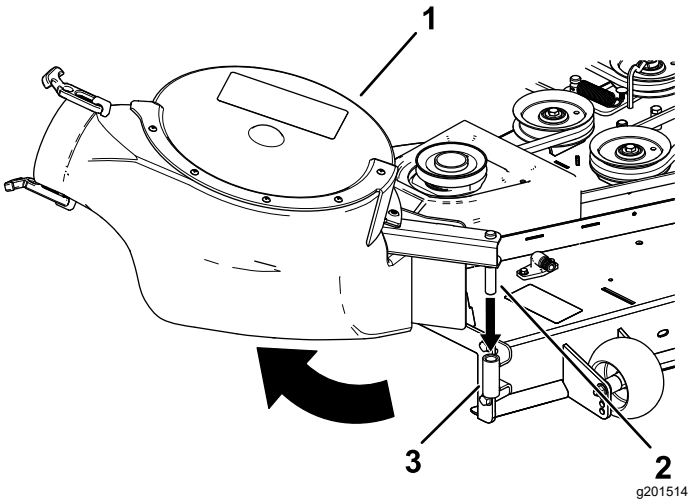

Figure 24

1. Blower assembly
2. Blower pivot pin
3. Blower support

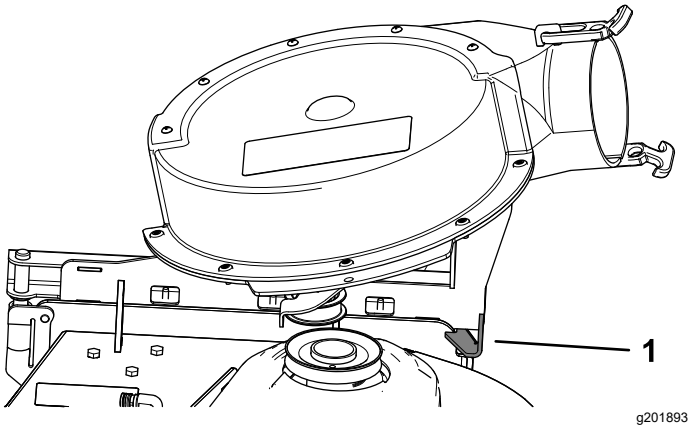

Figure 25

1. Blower latch

12

Installing the Blower Belt and Powered Bagger Cover

Parts needed for this procedure:

1	Powered bagger cover
1	Blower belt

Procedure

1. Install the belt around the blower pulley (Figure 26 and Figure 27); refer to 11 Installing the Blower Assembly (page 16).

   Use the following belt based on the mower deck size:

48-inch Mower Deck	54-inch Mower Deck	60-inch Mower Deck
Toro Part No. 127-0074	Toro Part No. 127-0075	Toro Part No. 127-0076

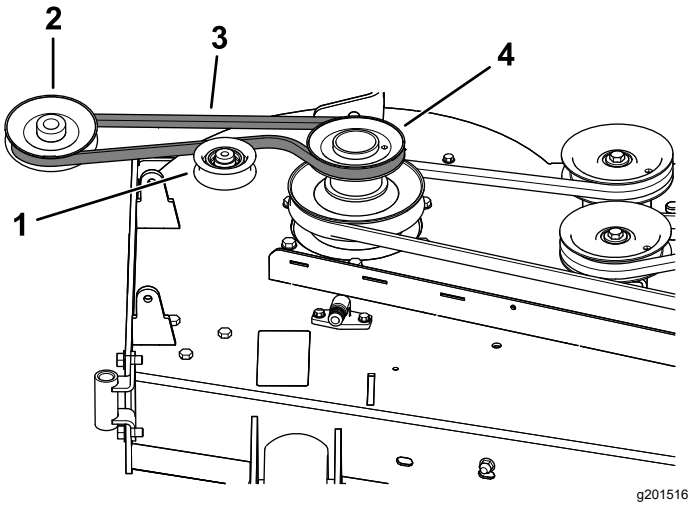

Figure 26

Blower Belt Routing

1. Idler/tension pulley
2. Blower pulley
3. Blower belt
4. Drive pulley

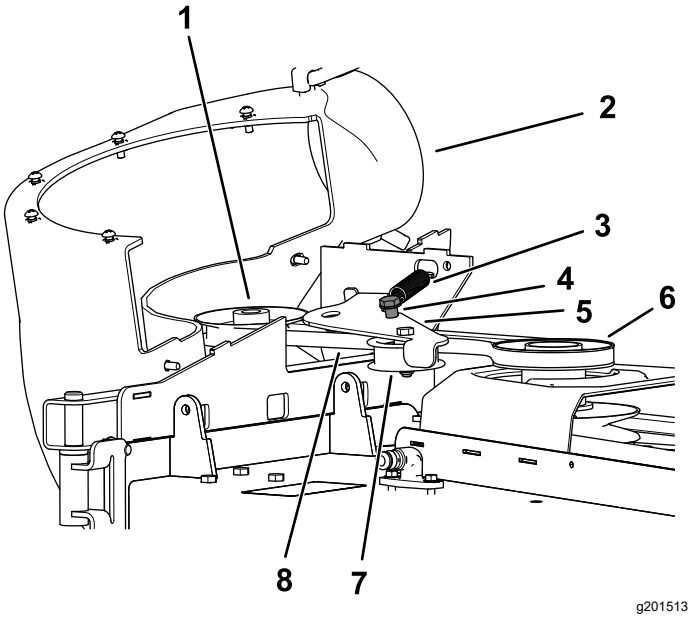

Figure 27

1. Blower pulley
2. Blower in position (housing portion removed for illustrative purposes)
3. Spring
4. Idler-pulley post
5. Idler arm
6. Drive pulley
7. Idler/tension pulley
8. Blower belt

2. Ensure that the belt remains aligned to the blower pulley while you are installing the blower assembly.
3. Pull the spring loaded idler pulley away from the fixed spring post, and route the belt around the mower deck pulley (Figure 27).

   Note: Ensure that the belt is routed around the blower pulley correctly.
4. Route the belt around the drive pulley as illustrated in Figure 26 and Figure 27.
5. Install the powered bagger cover over the belt cover, and secure it by tightening the knob (Figure 28).

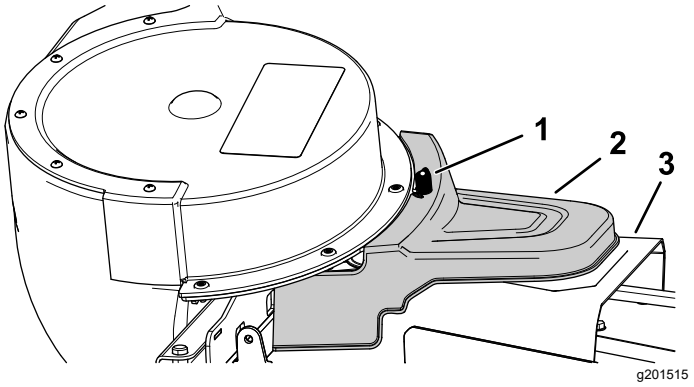

Figure 28

1. Knob
2. Powered bagger cover
3. Belt cover

13

Installing the Discharge Tubes

Parts needed for this procedure:

1	Upper tube
2	Screw (1/4 x 3/4 inches)
2	Washer (1/4 inch)
2	Locknut (1/4 inch)
1	Lower tube

Procedure

Important: **Make sure that the mower deck is in the lowest height-of-cut position before installing the discharge tubes.**

Note: Remember to install the grass deflector when you remove the bagger from the mower.

1. Disengage the PTO and engage the parking brake.
2. Shut off the engine and remove the key.
3. Lower the mower deck to the lowest height-of-cut position.
4. Remove the bags for viewing the tube under the hood.
5. Lower and latch the hood.
6. Use both latches to attach the lower tube to the blower assembly (Figure 29).

   Note: Ensure that the notch in the lower tube is at the bottom when installed (Figure 31).

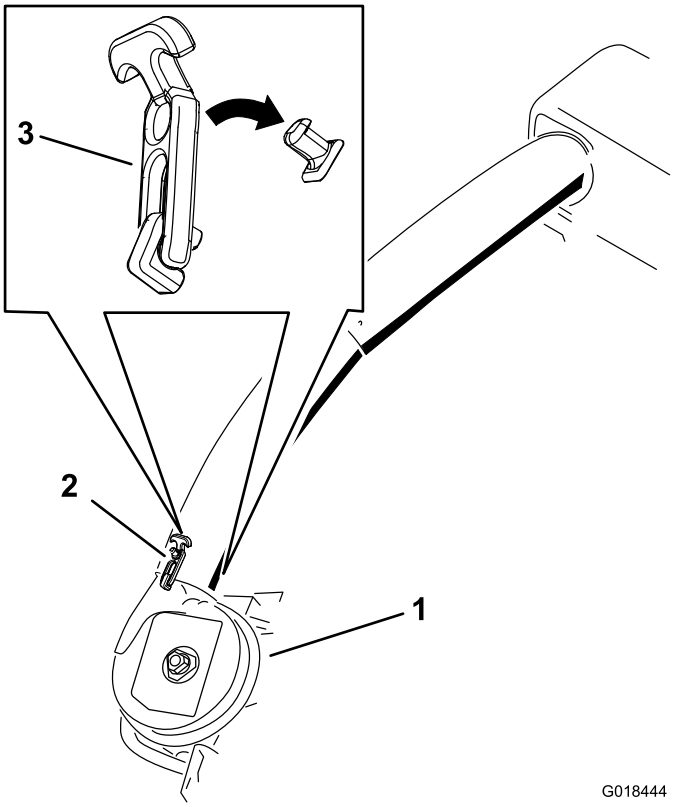

Figure 29
Lower Discharge Tube Latch

1. Blower assembly
2. Upper latch
3. Latch

7. Make note of where the 2 bolts in the upper tube are installed.

   Note: The hole near the molded arrowheads will not be used.

8. Remove the 2 bolts in the lower end of the upper tube.
9. Use the 2 holes as a template for the lower tube.

   Note: Retain the hardware.

10. Insert the upper end (no holes) of the upper tube through the tube seal in the hood by pushing the tube in until the tube contacts the inside of the hood.
11. Pull the upper tube out slightly so that the seal extends outward and over the lower tube (Figure 30).

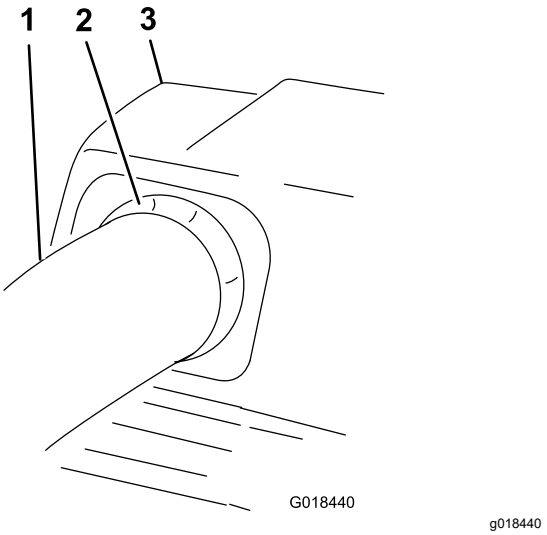

Figure 30

1. Upper tube
2. Rubber seal protruding out
3. Bagger hood

12. Align the upper tube holes to match the dimples on the surface of the lower tube.

    Note: Ensure that the side profile appears as shown in Figure 31.

    Note: Do not use the open hole near the molded arrowheads.

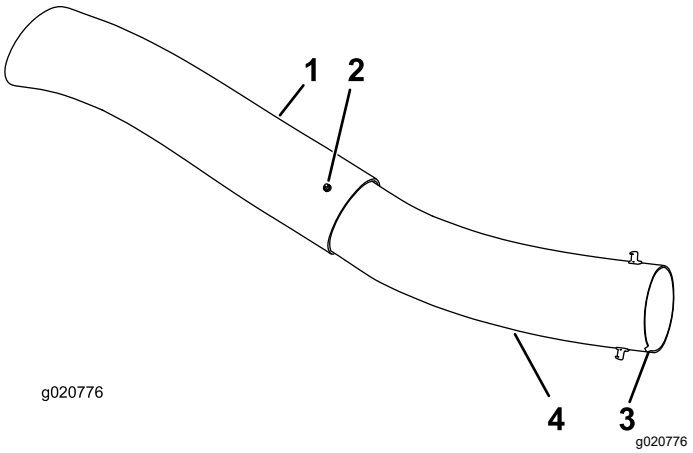

Figure 31

1. Upper tube
2. Existing hole (bolt removed)
3. Notch at the bottom of the tube when installed
4. Lower tube

13. Using the existing holes in the upper tube as a template, drill 2 holes, 6.5 mm (1/4 inch) diameter, through the dimples on the lower tube (Figure 32).

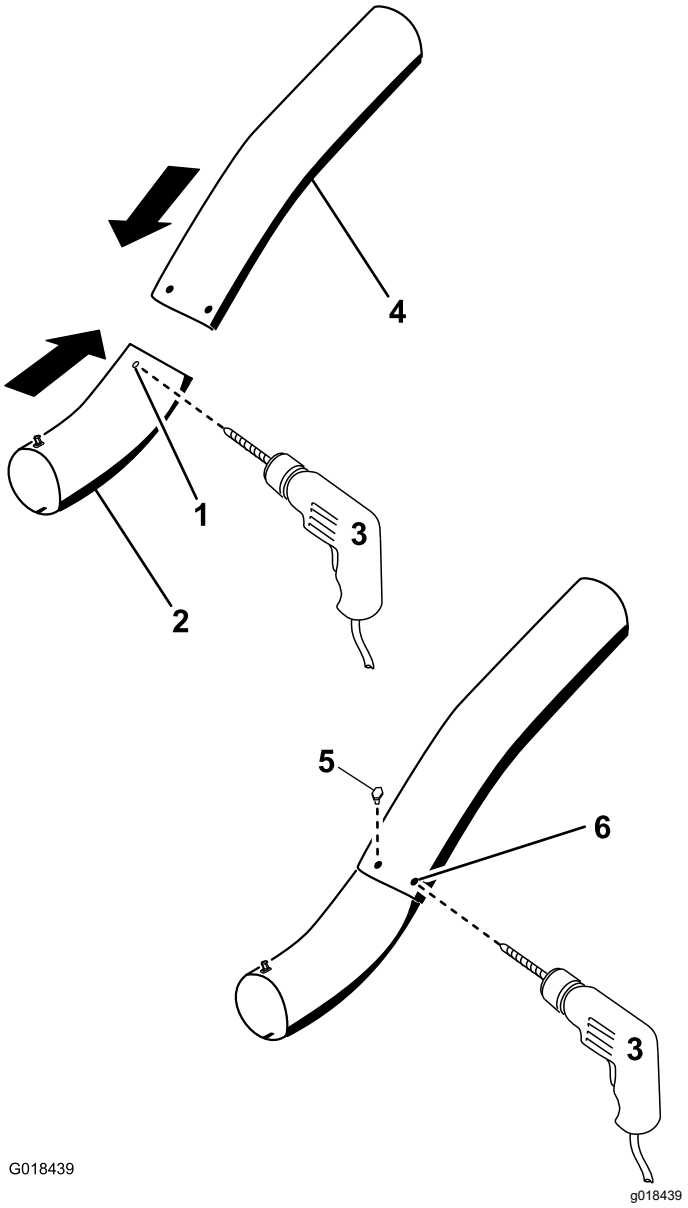

Figure 32

Drilling Lower Discharge Tube

1. Dimples
2. Lower tube
3. Drill 6.5 mm (1/4 inch) diameter hole
4. Upper tube
5. Install screw (1/4 x 3/4 inch), washer (1/4 inch), and locknut (1/4 inch) here.
6. Upper tube—existing holes

14. Remove the upper and lower tubes from the machine.
15. Slide the tubes together and align the holes.
16. Install the washers (1/4 inch) onto the bolts (Figure 32).
17. Using a hex key tool, install the screws (1/4 x 3/4 inch) and washers (1/4 inch) from the inside of the lower tube and through the existing holes in the upper tube (Figure 32).
18. Secure the tubes together with the nuts (1/4 inch) as shown in Figure 32.
19. Insert the upper discharge tube through the tube seal in the hood.
20. Pull the upper tube out slightly so that the seal extends outward and over the blower assembly (Figure 30).
21. Use both latches to attach the lower tube to the blower assembly (Figure 29).

Operation

⚠ WARNING

To avoid personal injury, follow these procedures:

- **Become familiar with all operating and safety instructions in the *Operator's Manual* for the mower before using this attachment.**
- **Never remove the discharge tube, bags, bagger top, or the chute while the engine is running.**
- **Always shut the engine off and wait for all moving parts to stop before clearing an obstruction from the bagging system.**
- **Never perform maintenance or make repairs while the engine is running.**

⚠ WARNING

Without the grass deflector, bagger tubes or complete bagger assembly mounted in place, you and others are exposed to blade contact and thrown debris. Contact with the rotating mower blade(s) and thrown debris will cause injury or death.

- **Always install the grass deflector when removing the bagger and changing to side discharge mode.**
- **If the grass deflector is ever damaged, replace it immediately. The grass deflector routes material down toward the turf.**
- **Never put your hands or feet under the mower.**
- **Never try to clear the discharge area or mower blades unless you move the power take off (PTO) to off and rotate the ignition key to off. Also remove the key and pull the wire off of the spark plug(s).**
- **Turn off the engine before unclogging the discharge chute.**

Emptying the Grass Bags

⚠ DANGER

Debris, such as leaves, grass, or brush can catch fire. A fire in the engine area can cause personal injury and property damage.

- **Keep the engine and muffler area free of debris accumulation.**
- **Take care when opening the bagger cover to keep debris from falling onto the engine and muffler area.**
- **Allow the machine to cool before storing it.**

Be careful when lifting or handling a grass bag that is full. To empty the grass bags:

1. Park the machine on a level surface and disengage the blade control switch.
2. Move the motion control levers outward to the neutral lock position, shut off the engine, remove the key, set the parking brake and wait for all moving parts to stop before leaving the operating position.
3. Open (raise) the bagger top (Figure 33).

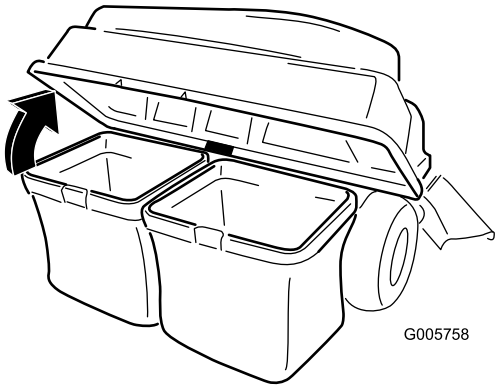

g005758

Figure 33

4. Compress debris into the bags. With both hands, lift up on the bag and unhook it from the retaining bracket. Empty the bag. Repeat the procedure for the other bag.

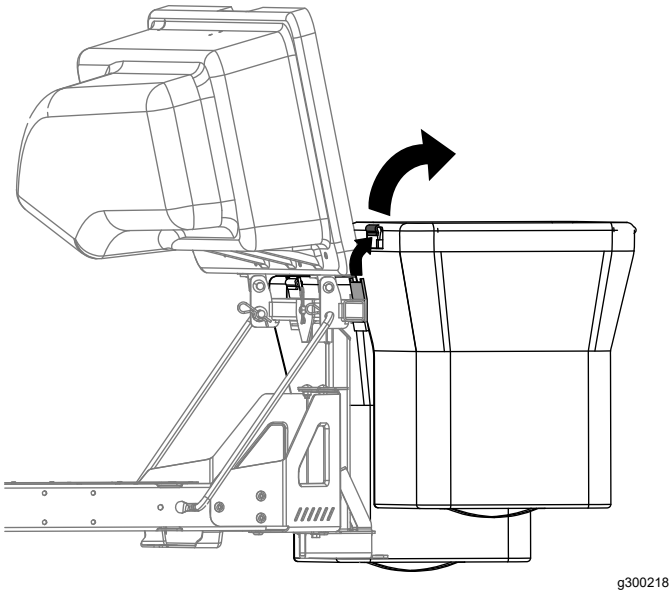

g300218

Figure 34

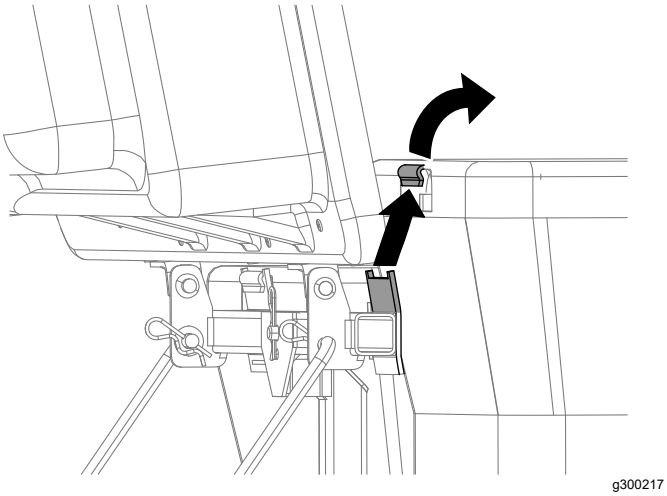

g300217

Figure 35

5. Install the bags by sliding the bag frame hooks onto the retaining brackets.
6. Lower the bagger top onto the bags.

Clearing Obstructions from the Bagger

⚠ WARNING

When the bagger is in operation, the blower is rotating and can cut off or injure hands and fingers.

- **Before adjusting, cleaning, repairing and inspecting the blower, and before unclogging the chute, shut off the engine and wait for all moving parts to stop. Remove the key.**
- **Use a stick or similar object, not your hands, to remove an obstruction from the blower and tube.**
- **Keep your face, hands, feet, and any other part of your body or clothing away from concealed, moving, or rotating parts.**

1. Park the machine on a level surface and disengage the blade control switch.
2. Move the motion control levers outward to the neutral lock position, stop the engine, remove the key, set the parking brake and wait for all moving parts to stop before leaving the operating position.
3. Check the grass bags and empty them if they are full.
4. Remove and separate the discharge tube and chute from the bagger top and mower. Using a stick or similar object, carefully remove and clear the obstruction from the mower, discharge tube, chute, and the bagger top.
5. After you remove the obstruction, install the complete bagger system and resume operation.

Removing the Bagger

⚠ CAUTION

Failing to remove the front bagger weights and operating the machine without the bagger attachment may cause an unstable condition, which could result in a loss of control.

- **Always remove the front weights when removing the bagger attachment.**
- **Never operate the machine without the bagger attachment and the front weights installed.**

You can remove the bagger by repeating the Setup sections from all installed bagger related kits in

reverse order. If weights are installed, always remove the front bagger weights when removing the bagger attachments.

Note: It is necessary only to remove the cutoff baffle when installing a mulching kit.

Operating Tips

Tips for Bagging

Remembering the Size of the Machine with the Attachment

Remember that the machine is longer and wider with this attachment installed. By turning too sharply in confined places, you may damage the attachment.

Trimming

Always trim with the left side of the mower. Do not trim with the right side of the mower because you could damage the bagger chute and discharge tube.

Cutting Height

Do not set the mower cutting height too low because long grass surrounding the mower can prevent air from getting under the mower and entering the bagging system. If enough air does not get under the mower, the bagging system will plug.

Cutting Frequency

Cut the grass often, especially when it grows rapidly. You will have to cut your grass twice if it gets excessively long.

Cutting Technique

For best lawn appearance, be sure to slightly overlap the mower into the previously cut area. This helps reduce the load on the engine and reduces the chance of plugging the chute and discharge tube.

Bagging Speed

Most often you will bag with the mower throttle in the FAST position and drive at a normal ground speed. However, in extremely dry and dusty grass, you may want to slightly reduce the throttle speed and increase the ground speed of the mower. The bagging system may plug if you drive too fast and the engine speed gets too slow. On hills, it may be necessary to slow the mower ground speed. This helps maintain the engine speed and bagging efficiency. Mow downhill whenever possible.

⚠ CAUTION

As the bagger fills, extra weight is added to the back of the machine. If you stop and start suddenly on hills, you may lose steering control or the machine may tip.

- **Do not start or stop suddenly when going uphill or downhill. Avoid uphill starts.**
- **If you do stop the machine when going uphill, disengage the blade control. Then back down the hill using a slow speed.**
- **Avoid sudden turns or rapid speed changes on slopes.**
- **Never operate the machine without the bagger attachment and the front weights installed.**

Bagging Long Grass

Excessively long grass is heavy and may not be propelled completely into the grass bags. If this happens, the discharge tube and chute may plug. To avoid plugging the bagging system, mow the grass at a high height of cut, then lower the mower to your normal cutting height and repeat the bagging process.

Bagging Wet Grass

Always try to cut grass when it is dry because your lawn will have a neat appearance. If you must cut wet grass, use the conventional side-discharge feature of the mower. Several hours later, when the clippings are dry, install the complete bagger attachment and vacuum up the grass clippings.

Signs of Plugging

As you are bagging, a small amount of grass clippings normally blow out the front of the mower. An excessive amount of clippings blowing out indicates that the bags are full or the system is plugged.

Maintenance

Note: Determine the left and right sides of the machine from the normal operating position.

Recommended Maintenance Schedule(s)

Maintenance Service Interval	Maintenance Procedure
After the first 8 hours	• Inspect the blower belt. • Inspect the bagger.
After each use	• Clean the hood screen. • Clean the bagger.
Every 25 hours	• Inspect the blower belt.
Every 100 hours	• Inspect the bagger.

⚠ WARNING

If you leave the key in the key switch, someone could accidently start the engine and seriously injure you or other bystanders.

Remove the key and disconnect the wire from the spark plug before you do any maintenance. Set the wire aside so that it does not accidentally contact the spark plug.

⚠ WARNING

Engines can become hot when they are operating. Severe burns can occur from contacting hot surfaces.

Allow engines, especially the muffler, to cool before touching.

⚠ WARNING

Debris, such as leaves, grass, or brush can catch fire. A fire in the engine area can cause personal injury and property damage.

- **Keep the engine and muffler area free of debris accumulation.**
- **Take care when opening the bagger cover to keep debris from falling onto the engine and muffler area.**
- **Allow the machine to cool before storing it.**

Preparing for Maintenance

Do the following steps before preforming maintenance on the machine:

1. Park the machine on a level surface.
2. Disengage the PTO, move the motion control levers to the NEUTRAL-LOCK position, and engage the parking brake.
3. Shut off the engine and remove the key.
4. Clean the mower of any debris on the deck or rear part of the mower to ease maintenance.

Cleaning the Hood Screen

Service Interval: After each use

1. Open the bagger hood.
2. Clean the debris from the screen.
3. Close the bagger hood.

Cleaning the Bagger and Bags

Service Interval: After each use

1. Wash the inside and outside of the bagger hood, bags, tube, and the underside of the mower.

   Note: Use a mild automotive detergent to remove dirt.
2. Make sure that you remove matted grass from all parts.
3. After washing all parts, let them dry thoroughly.

Note: With all parts installed, start and run the machine for a minute to assist in drying.

Inspecting the Blower Belt

Service Interval: After the first 8 hours

Every 25 hours

Check belts for cracks, frayed edges, burn marks or any other damage. Replace damaged belts.

Replacing the Blower Belt

1. Remove the plastic belt cover.
2. Pull back on the spring-loaded idler pulley to relieve the belt tension (Figure 36).

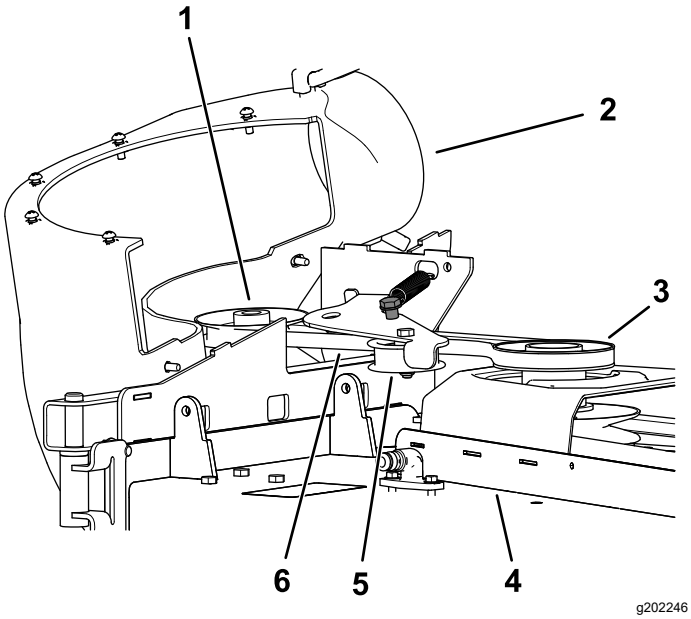

Figure 36

1. Blower pulley
2. Blower in position (housing portion removed for illustrative purposes)
3. Drive pulley
4. Mower deck
5. Idler/tension pulley
6. Blower belt

3. Remove the existing bagger belt from the mower-deck pulley.
4. Remove the blower from the mower deck.
5. Remove the existing bagger belt from the blower pulleys.
6. Install the new belt around the blower pulleys (Figure 36).
7. Install the blower onto the blower support.
8. Install the new belt around the mower-deck pulley (Figure 36).
9. Pull back on the spring loaded idler pulley and install the belt onto the spring-loaded idler pulley (Figure 36).

Inspecting the Bagger

Service Interval: Every 100 hours

After the first 8 hours

1. Check the upper tube, lower tube, bagger hood, and the blower assembly.

   Note: Replace these parts if they are cracked or broken.
2. Check the bags, bagger frame, and screen.

   Note: Replace any parts that are cracked or broken.
3. Tighten all nuts bolts and screws.

Inspecting the Mower Blades

1. Inspect the mower blades regularly and whenever a blade strikes a foreign object.
2. If blades are badly worn or damaged, install new blades; refer to your machine *Operator's Manual* for complete blade maintenance.

Storage

Storing the Bagger Attachment

1. Clean the bagger attachment; refer to Cleaning the Bagger Attachment.
2. Inspect the bagger attachment for damage; refer to Inspecting the Bagger Attachment.
3. Ensure that the grass bags are empty and thoroughly dry.
4. Store the bagger in a clean, dry place, out of direct sunlight. This protects the plastic parts and extends the life of the bagger. If you must store the bagger outside, cover it with a weatherproof cover.

Troubleshooting

Problem	Possible Cause	Corrective Action
There is abnormal vibration.	1. The cutting blade(s) are bent or unbalanced. 2. The blade-mounting bolt is loose. 3. There is a loose blower pulley or pulley assembly. 4. The bagger belt is worn. 5. The blower fan blade(s) are bent or unbalanced.	1. Install new cutting blade(s). 2. Tighten the blade-mounting bolt. 3. Tighten the appropriate pulley. 4. Replace the belt. 5. Contact an Authorized Service Dealer.
Reduced bagging performance	1. The engine speed is too low. 2. The screen in the bagger hood is plugged. 3. The bagger belt is loose. 4. There is a plugged tube or blower. 5. The bags are full.	1. Always operate the engine at full throttle. 2. Remove debris, leaves, or grass clippings from the screen. 3. Replace the bagger belt. 4. Locate and remove the plugged debris. 5. Empty the hopper.
The blower and tubes plug too frequently.	1. The bags are too full. 2. The engine speed is too low. 3. The grass is too wet. 4. The grass is too long. 5. The screen in the bagger hood is plugged. 6. The ground speed is too fast. 7. The bagger belt is worn.	1. Dump more frequently. 2. Always operate the engine at full throttle. 3. Cut grass when it is dry. 4. Cut no more than 51 to 76 mm (2 to 3 inches) or 1/3 of the grass height, whichever is less. 5. Remove debris, leaves, or grass clippings from the screen. 6. Drive slower at full throttle. 7. Replace the belt.
Debris blowout	1. The bags are too full. 2. The ground speed is too fast. 3. The mower deck is not leveled.	1. Dump more frequently. 2. Drive the machine at slow ground speed while operating the engine at full throttle. 3. See the machine *Operator's Manual* for leveling the mower deck.
The blower impeller does not spin freely.	1. The blower is plugged. 2. The impeller is not aligned.	1. Remove debris, leaves, or grass clippings from the blower impeller. 2. Contact an Authorized Service Dealer.

California Proposition 65 Warning Information

What is this warning?

You may see a product for sale that has a warning label like the following:



WARNING: Cancer and Reproductive Harm—www.p65Warnings.ca.gov.

What is Prop 65?

Prop 65 applies to any company operating in California, selling products in California, or manufacturing products that may be sold in or brought into California. It mandates that the Governor of California maintain and publish a list of chemicals known to cause cancer, birth defects, and/or other reproductive harm. The list, which is updated annually, includes hundreds of chemicals found in many everyday items. The purpose of Prop 65 is to inform the public about exposure to these chemicals.

Prop 65 does not ban the sale of products containing these chemicals but instead requires warnings on any product, product packaging, or literature with the product. Moreover, a Prop 65 warning does not mean that a product is in violation of any product safety standards or requirements. In fact, the California government has clarified that a Prop 65 warning "is not the same as a regulatory decision that a product is 'safe' or 'unsafe.'" Many of these chemicals have been used in everyday products for years without documented harm. For more information, go to https://oag.ca.gov/prop65/faqs-view-all.

A Prop 65 warning means that a company has either (1) evaluated the exposure and has concluded that it exceeds the "no significant risk level"; or (2) has chosen to provide a warning based on its understanding about the presence of a listed chemical without attempting to evaluate the exposure.

Does this law apply everywhere?

Prop 65 warnings are required under California law only. These warnings are seen throughout California in a wide range of settings, including but not limited to restaurants, grocery stores, hotels, schools, and hospitals, and on a wide variety of products. Additionally, some online and mail order retailers provide Prop 65 warnings on their websites or in catalogs.

How do the California warnings compare to federal limits?

Prop 65 standards are often more stringent than federal and international standards. There are various substances that require a Prop 65 warning at levels that are far lower than federal action limits. For example, the Prop 65 standard for warnings for lead is 0.5 µg/day, which is well below the federal and international standards.

Why don't all similar products carry the warning?

- Products sold in California require Prop 65 labelling while similar products sold elsewhere do not.
- A company involved in a Prop 65 lawsuit reaching a settlement may be required to use Prop 65 warnings for its products, but other companies making similar products may have no such requirement.
- The enforcement of Prop 65 is inconsistent.
- Companies may elect not to provide warnings because they conclude that they are not required to do so under Prop 65; a lack of warnings for a product does not mean that the product is free of listed chemicals at similar levels.

Why does Toro include this warning?

Toro has chosen to provide consumers with as much information as possible so that they can make informed decisions about the products they buy and use. Toro provides warnings in certain cases based on its knowledge of the presence of one or more listed chemicals without evaluating the level of exposure, as not all the listed chemicals provide exposure limit requirements. While the exposure from Toro products may be negligible or well within the "no significant risk" range, out of an abundance of caution, Toro has elected to provide the Prop 65 warnings. Moreover, if Toro does not provide these warnings, it could be sued by the State of California or by private parties seeking to enforce Prop 65 and subject to substantial penalties.