WORX NITRO

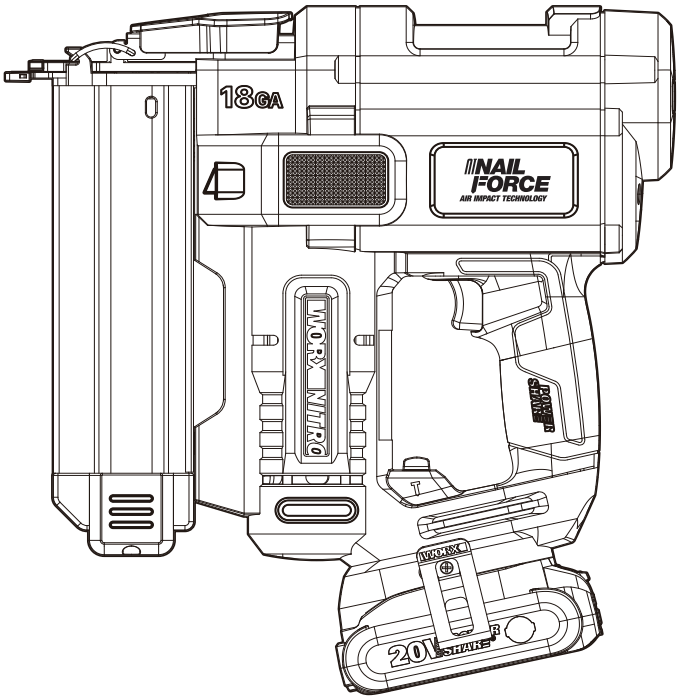

20V Cordless 18 Gauge Brad Nailer	**EN**	**P02**
20V Cordless 18 Gauge Brad Nailer	**F**	**P11**
20V Cordless 18 Gauge Brad Nailer	**ES**	**P18**

HELPLINE NUMBER
NUMÉRO DU SERVICE D'ASSISTANCE
NÚMERO DE LÍNEA DE AYUDA
1-866-354-WORX (9679)

WX842L WX842L.X

TABLE OF CONTENT

1. SAFETY INSTRUCTIONS
2. COMPONENT LIST
3. TECHNICAL DATA
4. INTENDED USE
5. OPERATING INSTRUCTIONS
6. MAINTENANCE
7. TROUBLESHOOTING

1. SAFETY INSTRUCTIONS PRODUCT SAFETY

⚠ WARNING: Some dust created by power sanding, sawing, grinding, drilling and other construction activities contains chemicals known to the state of California to cause cancer, birth defects or other reproductive harm. Some examples of these chemicals are:

- **Lead from lead-based paints;**
- **Crystalline silica from bricks and cement and other masonry products;**
- **Arsenic and chromium from chemically-treated lumber.**

Your risk from these exposures varies, depending on how often you do this type of work. To reduce your exposure to these chemical: work in a well ventilated area, and work with approved safety equipment, such as those dust masks that are specially designed to filter out microscopic particles.

⚠ WARNING: This product can expose you to chemicals including lead and Di(2-ethylhexyl) phthalate (DEHP) which are known to the State of California to cause cancer and birth defects or other reproductive harm. For more information go to www.P65Warnings.ca.gov.

GENERAL POWER TOOL SAFETY WARNINGS

⚠ WARNING: Read all safety warnings and instructions. Failure to follow the warnings and instructions may result in electric shock, fire and/or serious injury.

Save all warnings and instructions for future reference.
The term “power tool” in the warnings refers to your mains-operated (corded) power tool or battery-operated (cordless) power tool.

1) Work area safety

a) Keep work area clean and well lit. Cluttered or dark areas invite accidents.

b) Do not operate power tools in explosive atmospheres, such as in the presence of flammable liquids, gases or dust. Power tools create sparks which may ignite the dust or fumes.

c) Keep children and bystanders away while operating a power tool. Distractions can cause you to lose control.

2) Electrical safety

a) Power tool plugs must match the outlet. Never modify the plug in any way. Do not use any adapter plugs with earthed (grounded) power tools. Unmodified plugs and matching outlets will reduce risk of electric shock.

b) Avoid body contact with earthed or grounded surfaces such as pipes, radiators, ranges and refrigerators. There is an increased risk of electric shock if your body is earthed or grounded.

c) Do not expose power tools to rain or wet conditions. Water entering a power tool will increase the risk of electric shock.

d) Do not abuse the cord. Never use the cord for carrying, pulling or unplugging the power tool. Keep cord away from heat, oil, sharp edges or moving parts. Damaged or entangled cords increase the risk of electric shock.

e) When operating a power tool outdoors, use an extension cord suitable for outdoor use. Use of a cord suitable for outdoor use reduces the risk of electric shock.

f) If operating a power tool in a damp location is unavoidable, use a residual current device (RCD) protected supply. Use of an RCD reduces the risk of electric shock.

3) Personal safety

a) Stay alert, watch what you are doing and use common sense when operating a power tool. Do not use a power tool while you are tired or under the influence of drugs, alcohol or medication. A moment of inattention while operating power tools may result in serious personal injury.

b) Use personal protective equipment. Always wear eye protection. Protective equipment such as dust mask, non-skid safety shoes, hard hat, or hearing protection used for appropriate conditions will reduce personal injuries.

c) Prevent unintentional starting. Ensure the switch is in the off-position before connecting to power source and/or battery pack, picking up or carrying the tool. Carrying power tools with your finger on the switch or energising power tools that have the switch on invites accidents.

d) Remove any adjusting key or wrench before turning the power tool on. A wrench or a key left

attached to a rotating part of the power tool may result in personal injury.

e) **Do not overreach. Keep proper footing and balance at all times.** This enables better control of the power tool in unexpected situations.

f) **Dress properly. Do not wear loose clothing or jewellery. Keep your hair, clothing and gloves away from moving parts.** Loose clothes, jewellery or long hair can be caught in moving parts.

g) **If devices are provided for the connection of dust extraction and collection facilities, ensure these are connected and properly used.** Use of dust collection can reduce dust-related hazards.

4) **Power tool use and care**

a) **Do not force the power tool. Use the correct power tool for your application.** The correct power tool will do the job better and safer at the rate for which it was designed.

b) **Do not use the power tool if the switch does not turn it on and off.** Any power tool that cannot be controlled with the switch is dangerous and must be repaired.

c) **Disconnect the plug from the power source and/or the battery pack from the power tool before making any adjustments, changing accessories, or storing power tools.** Such preventive safety measures reduce the risk of starting the power tool accidentally.

d) **Store idle power tools out of the reach of children and do not allow persons unfamiliar with the power tool or these instructions to operate the power tool.** Power tools are dangerous in the hands of untrained users.

e) **Maintain power tools. Check for misalignment or binding of moving parts, breakage of parts and any other condition that may affect the power tools operation. If damaged, have the power tool repaired before use.** Many accidents are caused by poorly maintained power tools.

f) **Keep cutting tools sharp and clean.** Properly maintained cutting tools with sharp cutting edges are less likely to bind and are easier to control.

g) **Use the power tool, accessories and tool bits etc., in accordance with these instructions and in the manner intended for the particular type of power tool, taking into account the working conditions and the work to be performed.** Use of the power tool for operations different from those intended could result in a hazardous situation.

5) **Battery tool use and care**

a) **Recharge only with the charger specified by the manufacturer.** A charger that is suitable for one type of battery pack may create a risk of fire when used with another battery pack.

b) **Use power tools only with specifically designated battery packs.** Use of any other battery packs may create a risk of injury and fire.

c) **When battery pack is not in use, keep it away from other metal objects, like paper clips, coins, keys, nails, screws or other small metal objects, that can make a connection from one terminal to another.** Shorting the battery terminals together may cause burns or a fire.

d) **Under abusive conditions, liquid may be ejected from the battery; avoid contact. If contact accidentally occurs, flush with water. If liquid contacts eyes, additionally seek medical help.** Liquid ejected from the battery may cause irritation or burns.

6) **Service**

a) **Have your power tool serviced by a qualified repair person using only identical replacement parts.** This will ensure that the safety of the power tool is maintained.

NAILER SAFETY WARNINGS

1. **Always assume that the tool contains fasteners.** Careless handling of the nailer can result in unexpected firing of fasteners and personal injury.
2. **Do not point the tool towards yourself or anyone nearby.** Unexpected triggering will discharge the fastener causing an injury.
3. **Do not actuate the tool unless the tool is placed firmly against the workpiece.** If the tool is not in contact with the workpiece, the fastener may be deflected away from your target.
4. **Disconnect the tool from the power source when the fastener jams in the tool.** While removing a jammed fastener, the nailer may be accidentally activated if it is plugged in.
5. **Use caution while removing a jammed fastener.** The mechanism may be under compression and the fastener may be forcefully discharged while attempting to free a jammed condition.
6. **Do not use this nailer for fastening electrical cables.** It is not designed for electric cable installation and may damage the insulation of electric cables thereby causing electric shock or fire hazards.

SAFETY WARNINGS FOR BATTERY PACK

a) **Do not dismantle, open or shred battery pack.**

b) **Do not expose battery pack to heat or fire. Avoid storage in direct sunlight.**

c) **Do not short-circuit a battery pack. Do not store battery packs haphazardly in a box or drawer where they may short-circuit each other or be short-circuited by other metal objects. When**

battery pack is not in use, keep it away from other metal objects, like paper clips, coins, keys, nails, screws or other small metal objects, that can make a connection from one terminal to another. Shorting the battery terminals together may cause burns or fire.

d) Do not subject battery pack to mechanical shock.

e) In the event of battery leaking, do not allow the liquid to come in contact with the skin or eyes. If contact has been made, wash the affected area with copious amounts of water and seek medical advice.

f) Do not use any battery pack which is not designed for use with the equipment.

g) Keep battery pack out of the reach of children.

h) Always purchase the battery pack recommended by the device manufacturer for the equipment.

i) Keep battery pack clean and dry.

j) Wipe the battery pack terminals with a clean dry cloth if they become dirty.

k) Battery pack needs to be charged before use. Always use the correct charger and refer to the manufacturer's instructions or equipment manual for proper charging instructions.

l) Do not leave battery pack on prolonged charge when not in use.

m) After extended periods of storage, it may be necessary to charge and discharge the battery pack several times to obtain maximum performance.

n) Recharge only with the charger specified by WORX. Do not use any charger other than that specifically provided for use with the equipment.

o) Retain the original product literature for future reference.

p) Use only the battery pack in the application for which it was intended.

q) Remove the battery pack from the equipment when not in use.

r) Dispose of properly.

s) Do not mix cells of different manufacture, capacity, size or type within a device.

t) Keep the battery away from microwaves and high pressure.

SYMBOLS

	To reduce the risk of injury, user must read instruction manual
	Warning
	Wear ear protection
	Wear eye protection
	Wear dust mask
	Batteries may enter water cycle if disposed improperly, which can be hazardous for ecosystem. Do not dispose of waste batteries as unsorted municipal waste.
	Do not burn
	Li-Ion battery, battery must be recycled
	Wear protective gloves
	Make sure the battery is removed prior to changing accessories or making any adjustments to the tool.



call2recycle®

POSITEC Inc. has established a partnership with the RBRC Corporation to recycle any Positec batteries with the RBRC-call2recycle seal. For environmental protection, please do not discard batteries in the trash. After the batteries' life cycle is ended, then please call 1-800-822-8837 for a free service that will properly dispose of the battery.

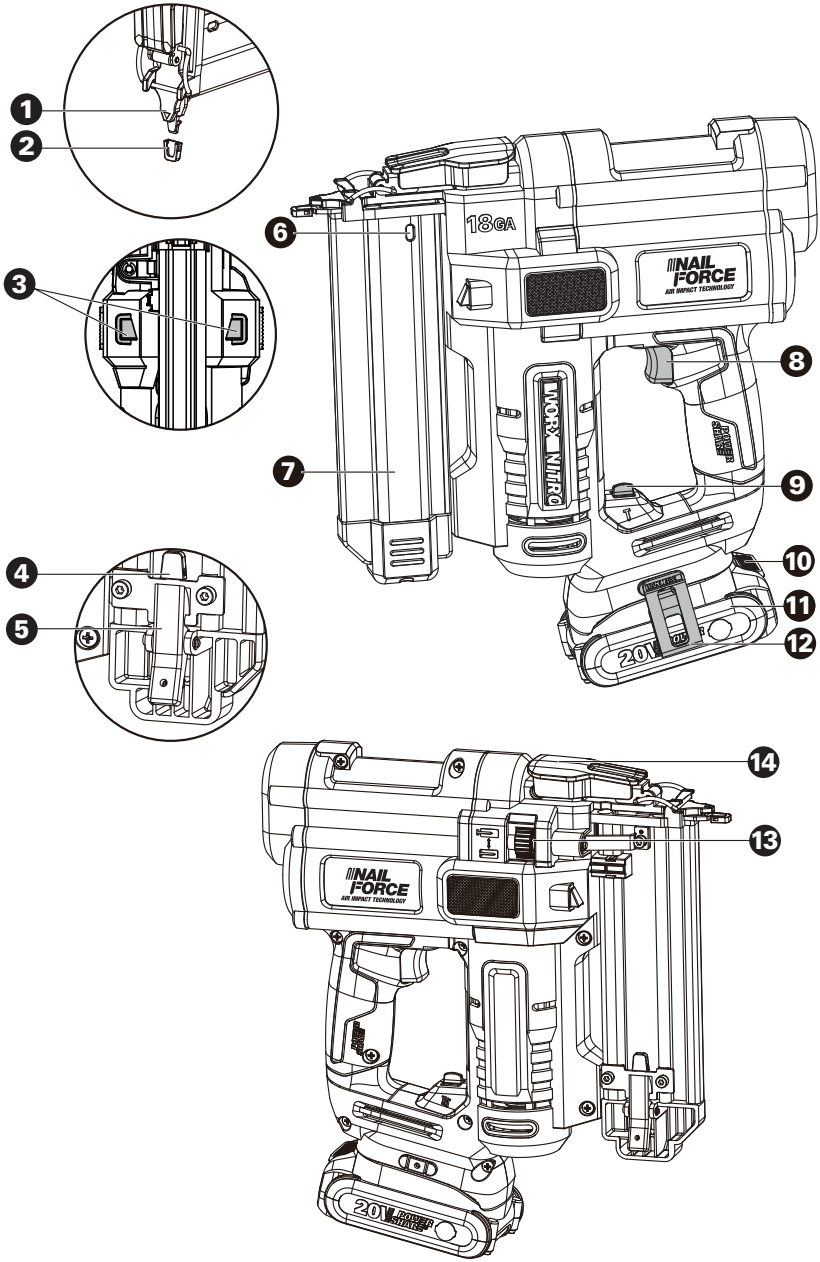

20V Cordless 18 Gauge Brad Nailer EN

2. COMPONENT LIST

1.	WORKPIECE CONTACT
2.	NO-MAR PAD
3.	LED WORKLIGHTS
4.	SPARE NO-MAR PAD
5.	MAGAZINE RELEASE BUTTON
6.	LOW NAIL INDICATOR WINDOW
7.	SIDE-LOADING MAGAZINE
8.	ON/OFF TRIGGER
9.	MODE SELECTOR SWITCH
10.	BATTERY PACK RELEASE BUTTON *
11.	BATTERY PACK *
12.	BELT HOOK
13.	TOOL-FREE DEPTH OF DRIVE ADJUSTMENT
14.	TOOL-FREE JAM RELEASE

*** Not all the accessories illustrated or described are included in standard delivery.**

3. TECHNICAL DATA

	WX842L WX842L.X**
Voltage	20V ⎓ Max***
Magazine capacity	100 nails
Nailer speed	80 nails/min
Nail type	18 gauge
Nail length (Brad nail)	5/8 inch ~ 2 inch (15 mm - 50 mm)
Machine weight(Bare tool)	6.2 lbs (2.8 kg)

**X may be followed by one or two characters. All models are the same except model number and trademark.The suffix in models may be number from “1” to “999” or English letter “A” to “Z” or “M1” to” M9” which means different package or the various of accessories packed in the package.

*** Voltage measured without workload. Initial battery voltage reaches maximum of 20 volts. Nominal voltage is 18 volts.

SUGGESTED BATTERIES AND CHARGERS

Category	Type	Capacity
20V Battery	WA3669	2.0 Ah
	WA3012	2.0 Ah
	WA3520	1.5 Ah
	WA3525	2.0 Ah
	WA3575	2.0 Ah
	WA3577	2.5 Ah
	WA3578	4.0 Ah
20V Charger	WA3881	2.0 A

We recommend that you purchase your accessories from the same store that sold you the tool. Refer to the accessory packaging for further details. Store personnel can assist you and offer advice.

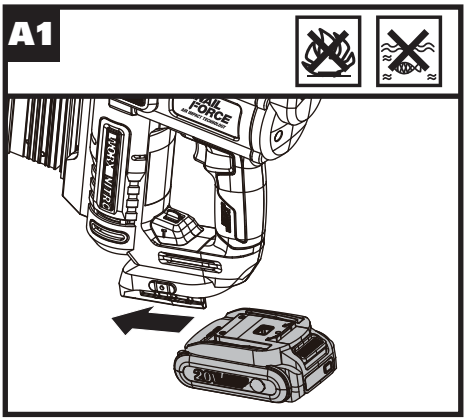
A1

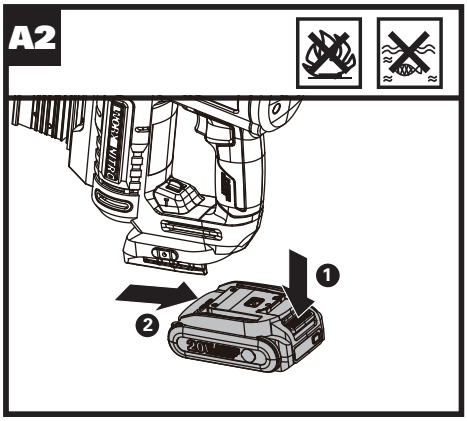
A2
1
2

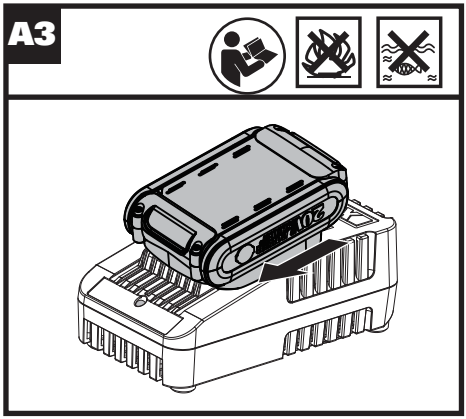
A3

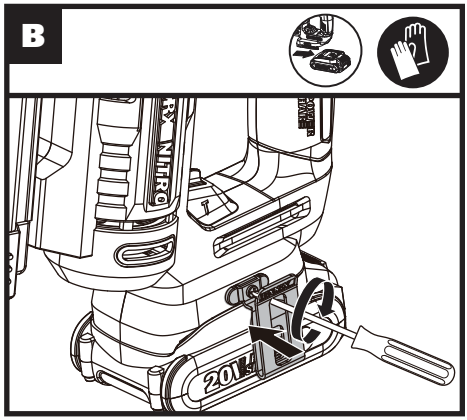
B

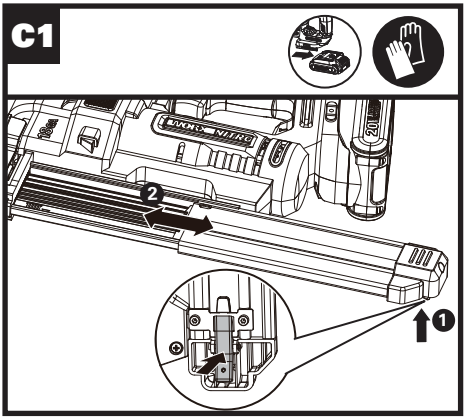
C1
2
1

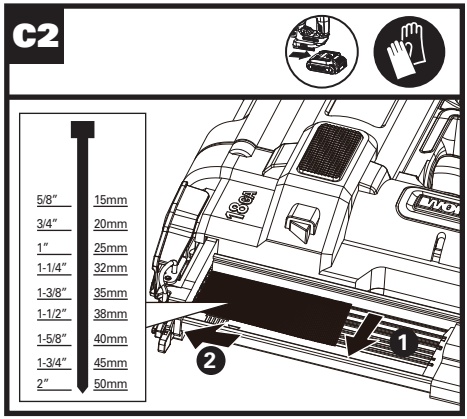
C2
5/8" 15mm
3/4" 20mm
1" 25mm
1-1/4" 32mm
1-3/8" 35mm
1-1/2" 38mm
1-5/8" 40mm
1-3/4" 45mm
2" 50mm
18ga
1
2

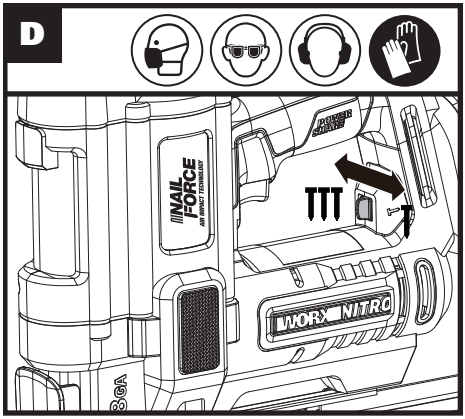
D
NAIL FORCE
WORX NITRO
18GA

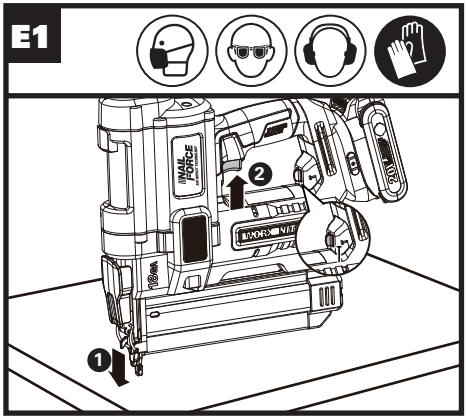
E1
NAIL FORCE
WORX NITRO
18GA
1
2

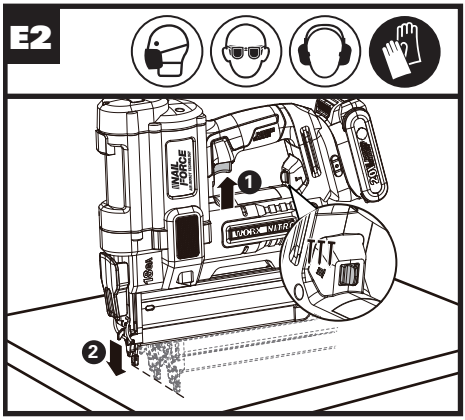
E2
NAIL FORCE
WORX NITRO
18GA
1
2

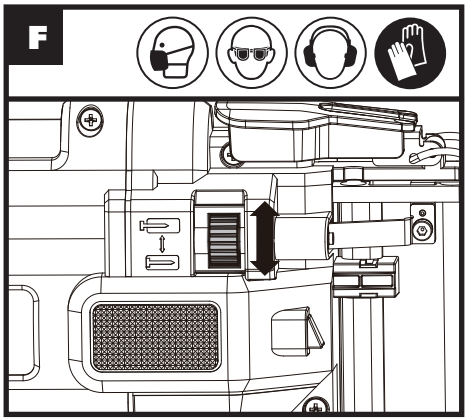
F

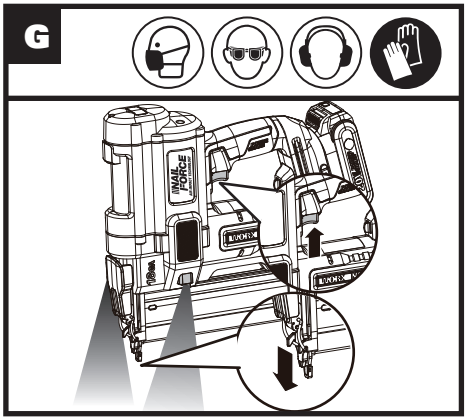
G
NAIL FORCE
WORX NITRO
18GA

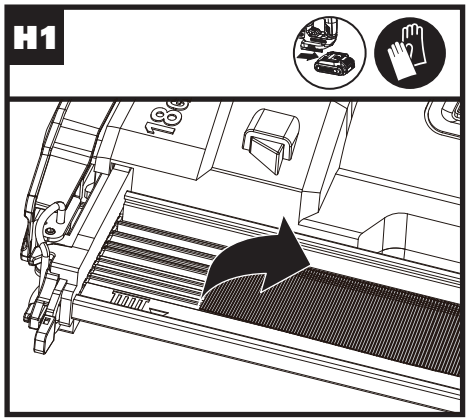
H1
18GA

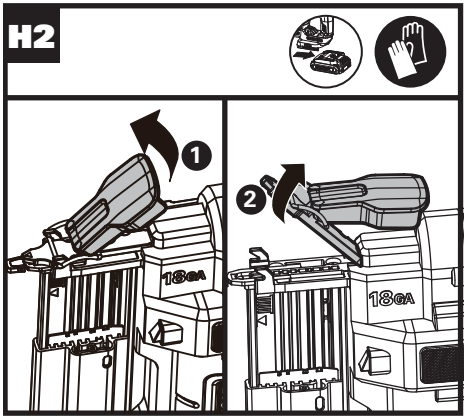
H2
1
2
18GA
18GA

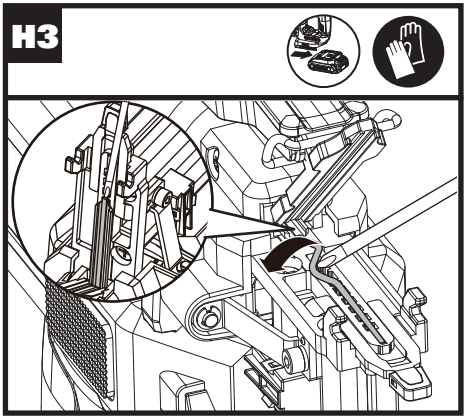
H3

4. INTENDED USE

This tool is intended for finishing and trimming (interior and exterior), such as door & window casing, door jambs, baseboard, crown molding, cabinetry, cap and shoe molding, molding, staircases, door & window trimming, chair rail, brickmolding, hardwood flooring, paneling, furniture, etc..

5. OPERATING INSTRUCTIONS

NOTE: Before using the tool, read the instruction book carefully.

WARNING: Keep the tool pointed away from yourself and others when loading nails. Always remove the nails and battery pack when tool is not in use. Failure to do so could result in possible serious personal injury

ASSEMBLY AND OPERATION

ACTION	FIGURE
BEFORE OPERATION	
Installing/removing the battery pack	See Fig. A1, A2
Charging the battery pack	See Fig. A3
ASSEMBLY	
Installing the belt hook **NOTE:** The belt hook can be installed on the left or right side of the nail gun.	See Fig. B
Loading the tool with brad nails 1. Remove the battery pack if installed. 2. Squeeze the magazine release button located on the rear of the magazine and slide the magazine cover open 3. Place brad nails in the upper left corner of channel 4. Push the magazine cover closed until it securely snaps into place, you may now reinstall battery pack **WARNING:** Use safety gloves. Keep the tool pointed away from yourself and others when loading nails. Failure to do so could result in possible serious personal injury.	See Fig. C1, C2
OPERATION	
Selecting the nailing mode Single sequential actuation mode: Provides accurate nail placement Contact actuation mode: Allows for fast repetitive nail placement **WARNING:** The nail gun will not function properly if the selector is not securely seated in either position. Always assure the selector is seated properly to avoid an unexpected nail discharge and possible serious personal injury.	See Fig. D
Using the on/off trigger in two different modes **Single sequential actuation mode:** -Push the workpiece contact against the work surface first and then squeeze the on/off trigger -Relase the on/off trigger and the workpiece contact. **Contact actuation mode:** -Squeeze and hold the trigger. Push the tool against the work surface to depress the workpiece contact and drive a nail. -Release the workpiece contact once after each nailing action. -Move the tool and then push the workpiece contact again. **NOTE:** The nail gun will operate only when squeezing the on/off trigger and pushing the work piece contact against the work surface simultaneoulsly **NOTE:** If there is no nailing action within 5 seconds after pressing the on/off trigger or pushing the workpiece contact, release the on/off trigger or the workpiece contact once and then operate again. **WARNING:** Never wedge or hold back the workpiece contact mechanism during operation of the tool. Doing so could result in possible serious injury.	See Fig. E1, E2

Depth of drive adjustment Turn the depth of drive adjustment knob up or down to change the driving depth. **NOTE:** Drive a test nail after each adjustment until the desired depth is set.	See Fig. F
LED worklight **NOTE:** The LED worklights will be activated when pressing the on/off trigger or pushing the workpiece contact. **NOTE:** The LED Worklights provide feedback to indicate whether the tool is functioning properly.(See troubleshooting)	See Fig. G
Removing a jammed nail Try to operate the tool for two more times to confirm the nail is jammed. **NOTE:** Before removing a jammed nail, open the magazine(see fig. C1) and remove all the nails. **WARNING:** Always remove the battery pack first and wear safety gloves. • Keep the magazine open. • Pull up on the tool free jam release and unhook the latch • Make sure the tip of the driving mechanism is in the initial position, if not, insert a flat head screwdriver into the tip of the driving mechanism and push back. • Remove any bent nails • Close the jam release and latch • Reinstall brad nails and reactivate the tool	See Fig. H1, H2, H3

6. MAINTENANCE

Remove the battery pack from the tool before carrying out any adjustment, servicing or maintenance.

There are no user serviceable parts in your power tool. Never use water or chemical cleaners to clean your power tool. Wipe clean with a dry cloth. Always store your power tool in a dry place. Keep the motor ventilation slots clean. Keep all working controls free of dust. Occasionally you may see sparks through the ventilation slots. This is normal and will not damage your power tool.

7. TROUBLESHOOTING

Symptom	Possible Causes	Possible Solution
Tool does not operate properly:		
LED light flashing 5 times	No nails	Replenish nails
LED light flashing 2 times	Battery is low	Charge the battery pack
LED light flashing 3 times	Tool is hot	Wait until the tool cools down
Tool operates properly, but fasteners do not drive fully	Depth of drive isn't deep enough Nail is too long for wood hardness	Adjust depth of drive Use nail length that is appropriate for wood
Tool operates properly, but fasteners are driven too deep	Depth of drive is too deep	Adjust depth of drive
Tool jams frequently	Incorrect nails Damaged nails Dirty magazine	Verify that nails are the correct size Replace nails Clean magazine