Form No. 3465-914 Rev C

TORO®

Count on it.

Operator's Manual

eHoverPro™ 450 60V Mower

Model No. 02614T—Serial No. 400000000 and Up

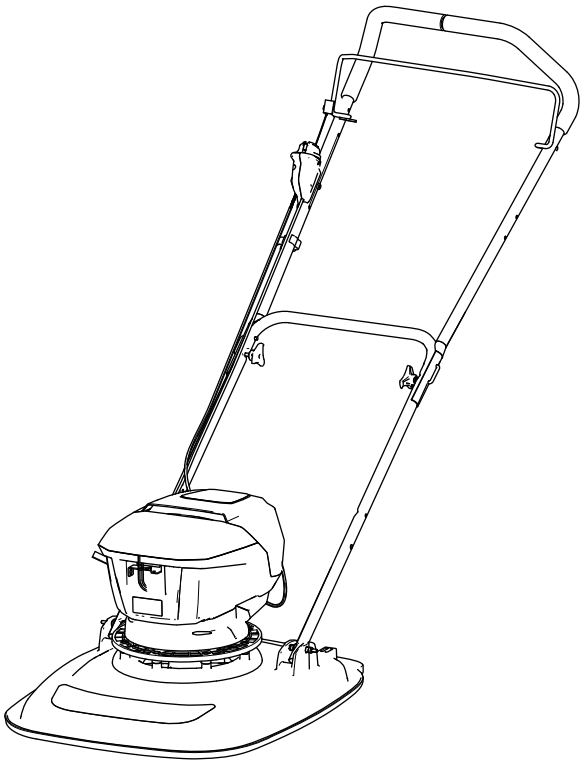

Register at www.Toro.com.
Original Instructions (EN)

CE UK CA

3465-914

⚠ WARNING

CALIFORNIA
Proposition 65 Warning

The power cord on this product contains lead, a chemical known to the State of California to cause birth defects or other reproductive harm. Wash hands after handling.

Use of this product may cause exposure to chemicals known to the State of California to cause cancer, birth defects, or other reproductive harm.

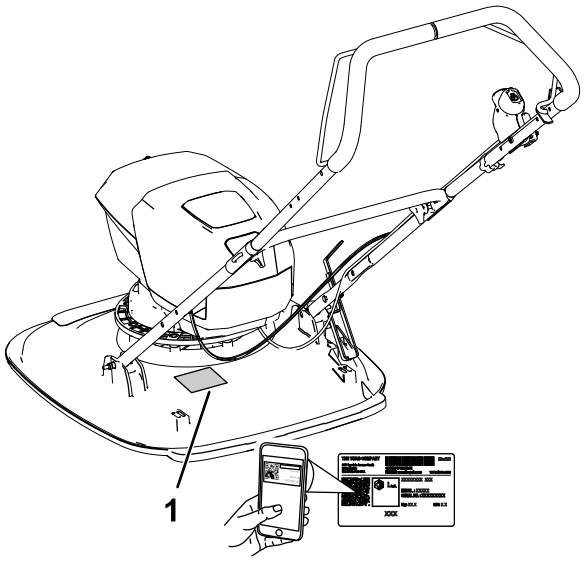

g414362

Figure 1

1. Model and serial number location

Introduction

This machine is intended to be used by hired, commercial operators for maintaining turf on slopes, tight undulations, areas near water, or bunker lips. It is designed to use Toro 60V lithium-ion battery packs. These battery packs are designed to be charged only by Toro 60V lithium-ion battery chargers. Using this product for purposes other than its intended use could prove dangerous to you and bystanders.

Read this information carefully to learn how to operate and maintain your product properly and to avoid injury and product damage. You are responsible for operating the product properly and safely.

Visit www.https://www.toro.com/en-GB for more information, including safety tips, training materials, accessory information, help finding a dealer, or to register your product.

Whenever you need service, genuine Toro parts, or additional information, contact an Authorized Service Dealer or Toro Customer Service and have the model and serial numbers of your product ready. Figure 1 identifies the location of the model and serial numbers on the product. Write the numbers in the space provided.

Important: **With your mobile device, you can scan the QR code on the serial number decal (if equipped) to access warranty, parts, and other product information.**

Write the product model and serial numbers in the space below:

Model No. _____

Serial No. _____

Safety-Alert Symbol

The safety-alert symbol (Figure 2) shown in this manual and on the machine identifies important safety messages that you must follow to prevent accidents.



g000502

Figure 2
Safety-alert symbol

The safety-alert symbol appears above information that alerts you to unsafe actions or situations and is followed by the word **DANGER**, **WARNING**, or **CAUTION**.

DANGER indicates an imminently hazardous situation which, if not avoided, **will** result in death or serious injury.

WARNING indicates a potentially hazardous situation which, if not avoided, **could** result in death or serious injury.

© 2024—The Toro® Company
8111 Lyndale Avenue South
Bloomington, MN 55420

Contact us at www.Toro.com.
Printed in the UK
All Rights Reserved

CAUTION indicates a potentially hazardous situation which, if not avoided, **may** result in minor or moderate injury.

This manual uses two other words to highlight information. **Important** calls attention to special mechanical information and **Note** emphasizes general information worthy of special attention.

Contents

Safety-Alert Symbol 2
Safety 3
IMPORTANT SAFETY INSTRUCTIONS 3
Safety and Instructional Decals 6
Setup 8
1 Installing the Handlebar Footstop 8
2 Installing the Handlebar 8
Product Overview 12
Controls 12
Specifications 12
Charging, Operation, and Storage Temperature Ranges 12
Attachments/Accessories 12
Before Operation 13
Inserting the Battery Pack into the Machine 13
During Operation 14
Running the Machine 14
Shutting Off the Machine 14
Removing the Battery Pack from the Machine 15
Supporting the Handlebar with the Footstop 15
Adjusting the Cutting Height 15
Operating Tips 17
After Operation 17
Charging the Battery Pack 17
Maintenance 19
Recommended Maintenance Schedule(s) 19
Preparing for Maintenance 19
Blade Maintenance 19
Cleaning the Machine 21
Storage 21
Preparing the Machine for Storage 21
Preparing the Machine for the Operation 21
Troubleshooting 22

Safety

IMPORTANT SAFETY INSTRUCTIONS

⚠ WARNING

When using electric lawn mowers, basic safety precautions should always be followed to reduce the risk of fire, electric shock, and personal injury, including the following:

Read All Instructions

I. Training

1. The operator of the machine is responsible for any accidents or hazards occurring to others or their property.
2. Do not allow children to use or play with the machine, battery pack, or the battery charger; local regulations may restrict the age of the operator.
3. Do not allow children or untrained people to operate or service this device. Allow only people who are responsible, trained, familiar with the instructions, and physically capable to operate or service the device.
4. Before using the machine, battery pack, and battery charger, read all the instructions and cautionary markings on these products.
5. Become familiar with the controls and proper use of the machine, battery pack, and battery charger.

II. Preparation

1. Keep bystanders, especially children and pets, out of the operating area.
2. Do not operate the machine without all guards and safety devices, such as deflectors and grass catchers, in place and functioning properly on the machine.
3. Inspect the area where you will use the machine and remove all objects that could interfere with the operation of the machine or that the machine could throw.
4. Before using the machine, ensure that the blade, blade bolt, and blade assembly are not worn or damaged. Replace any damaged or unreadable labels.
5. Use only the battery pack specified by Toro. Using other accessories and attachments may increase the risk of injury and fire.
6. Plugging the battery charger into an outlet that is not of the proper voltage can cause a

fire or electric shock. For a different style of connection, use an attachment plug adapter of the proper configuration for the power outlet if needed.

7. Do not use a damaged or modified battery pack or battery charger, which may exhibit unpredictable behavior that results in fire, explosion, or risk of injury.
8. If the supply cord to the battery charger is damaged, contact an authorized Toro distributor to replace it.
9. Charge the battery pack with only the battery charger specified by Toro. A charger suitable for 1 type of battery pack may create a risk of fire when used with another battery pack.
10. Charge the battery pack in a well-ventilated area only.
11. Follow all charging instructions and do not charge the battery pack outside of the temperature range specified in the instructions. Otherwise, you may damage the battery pack and increase the risk of fire.
12. Dress properly—Wear appropriate clothing, including eye protection; long pants; substantial, slip-resistant footwear (not barefoot or wearing sandals); and hearing protection. Tie back long hair and do not wear loose clothing or loose jewelry that can get caught in moving parts. Wear a dust mask in dusty operating conditions. Use of rubber gloves is recommended.

III. Operation

1. Contact with the moving blade will cause serious injury. Keep your hands and feet away from the cutting area and all moving parts of the machine. Keep clear of any discharge opening.
2. Using this machine for purposes other than its intended use could prove dangerous to you and bystanders.
3. Disengage the self-propel drive (if equipped) before starting the machine.
4. Do not tilt the machine when starting the motor.
5. Prevent unintentional starting—Ensure that the electric-start button is removed from the electric-start switch before connecting the battery pack and handling the machine.
6. Use your full attention while operating the machine. Do not engage in any activity that causes distractions; otherwise, injury or property damage may occur.
7. Stop the machine, remove the electric-start button, wait for all movement to stop, and remove the battery pack from the machine before adjusting, servicing, cleaning, or storing the machine.
8. Remove the battery pack and electric-start button from the machine whenever you leave it unattended or before changing accessories.
9. Do not force the machine—Allow the machine to do the job better and safer at the rate for which it was designed.
10. Stay alert—Watch what you are doing and use common sense when operating the machine. Do not use the machine while ill, tired, or under the influence of alcohol or drugs.
11. Do not use a battery-operated lawn mower in rain.
12. Operate the machine only in good visibility and appropriate weather conditions. Do not operate the machine when there is the risk of lightning.
13. Use extreme caution when reversing or pulling the machine toward you.
14. Keep proper footing and balance at all times, especially on slopes. Mow across the face of slopes, never up and down. Use extreme caution when changing directions on slopes. Do not mow on slopes more than 45°. Walk, never run with the machine.
15. Do not direct the discharge material toward anyone. Avoid discharging material against a wall or obstruction; material may ricochet toward you. Stop the blade(s) when crossing surfaces other than grass.
16. Watch for holes, ruts, bumps, rocks, or other hidden objects. Uneven terrain could cause you to lose your balance or footing.
17. Wet grass or leaves can cause serious injury if you slip and contact the blade. Do not mow in wet conditions. Do not mow when it is raining.
18. If the machine strikes an object or starts to vibrate, immediately shut off the machine, remove the electric-start button, wait for all movement to stop, and remove the battery pack before examining the machine for damage. Make all necessary repairs before resuming operation.
19. Stop the machine and remove the electric-start button before loading the machine for hauling.
20. Under abusive conditions, the battery pack may eject liquid; avoid contact. If you accidently come into contact with the liquid, flush with water. If the liquid contacts your eyes, seek medical help. Liquid ejected from the battery pack may cause irritation or burns.

IV. Maintenance and Storage

1. Stop the machine, remove the electric-start button, wait for all movement to stop, and remove the battery pack from the machine

before adjusting, servicing, cleaning, or storing the machine.

2. Do not attempt to repair the machine except as indicated in the instructions. Have an authorized Toro distributor perform service on the machine using identical replacement parts.
3. Wear gloves and eye protection when servicing the machine.
4. Sharpen a dull blade on both edges to maintain balance. Clean the blade and ensure that it is balanced.
5. Replace the blade if it is bent, worn, or cracked. An unbalanced blade causes vibration, which could damage the motor or cause personal injury.
6. When servicing the blade, be aware that the blade can still move even though the power source is off.
7. For best performance, use only genuine Toro replacement parts and accessories. Other replacement parts and accessories could be dangerous, and such use could void the product warranty.
8. Maintain the machine—Keep cutting edges sharp and clean for the best and safest performance. Keep handles dry, clean, and free from oil and grease. Keep guards in place and in working order. Keep the blade sharp. Use an identical replacement blade only.
9. Check the machine for damaged parts—If there are damaged guards or other parts, determine whether the machine will operate properly. Check for misaligned and binding moving parts, broken parts, mounting, and any other condition that may affect its operation. Unless indicated in the instructions, have an authorized Toro distributor repair or replace a damaged guard or part.
10. When the battery pack is not in use, keep it away from metal objects such as paper clips, coins, keys, nails, and screws that can make a connection from 1 terminal to another. Shorting the battery terminals may cause burns or a fire.
11. Check the blade and motor mounting bolts frequently for tightness.
12. When you are not using the machine, store it indoors in a dry, secure place out of the reach of children.
13. Do not expose a battery pack or machine to fire or excessive temperature. Exposure to fire or temperature above 130°C (265°F) may cause explosion.
14. CAUTION—A mistreated battery pack may present a risk of fire, explosion, or chemical burn.
    - Do not disassemble the battery pack.
    - Replace the battery pack with a genuine Toro battery pack only; using another type of battery pack may cause a fire or risk of injury.
    - Keep battery packs out of the reach of children and in the original packaging until you are ready to use them.

SAVE THESE INSTRUCTIONS

Safety and Instructional Decals

Safety decals and instructions are easily visible to the operator and are located near any area of potential danger. Replace any decal that is damaged or missing.

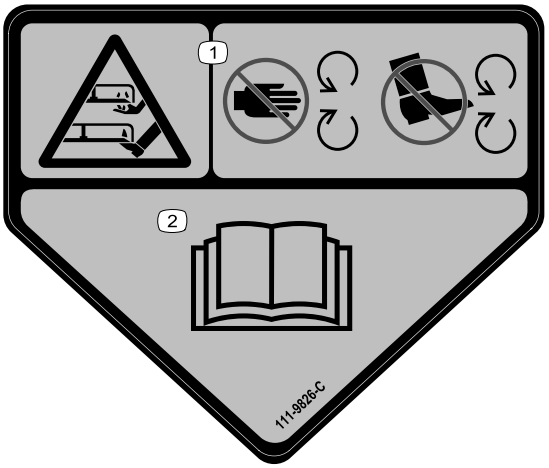

decal111-9826

111–9826

1. Cutting/dismemberment hazard of hand or foot, cutting unit—keep your hands and feet away from moving parts.
2. Read the *Operator's Manual*.



decal133-8054

133-8054



decal94-8072

94-8072

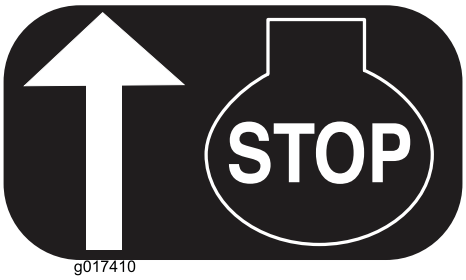

g017410

H295159

1. Engine stop (shut off)

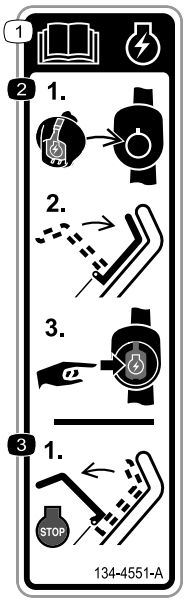

decal134-4551

134-4551

1. Read the *Operator's Manual* for more information on starting the machine.
2. To start the machine, insert the electric-start button into the electric-start switch, squeeze the blade-control bar to the handle, and press the electric-start button.
3. To shut off the machine, release the blade-control bar.



decal134-8067

134-8067

1. Warning—read the *Operator's Manual*; all operators should be trained before operating the machine.
2. Warning—wear hearing protection and eye protection.
3. Thrown object hazard—keep bystanders away.
4. Warning—read the *Operator's Manual*.
5. Cutting/dismemberment hazard of hands or feet, mower blade—shut off the machine and remove the key before performing maintenance; stay away from moving parts.

Setup

1

Installing the Handlebar Footstop

Parts needed for this procedure:

1	Lower handlebar
1	Footstop
2	Washer (6 mm)
1	Locknut (6 mm)

Procedure

Note: You can only use the footstop to support the handlebar in the vertical position when you assemble the handlebar in the lower position 103.4 cm (40-3/4 inches).

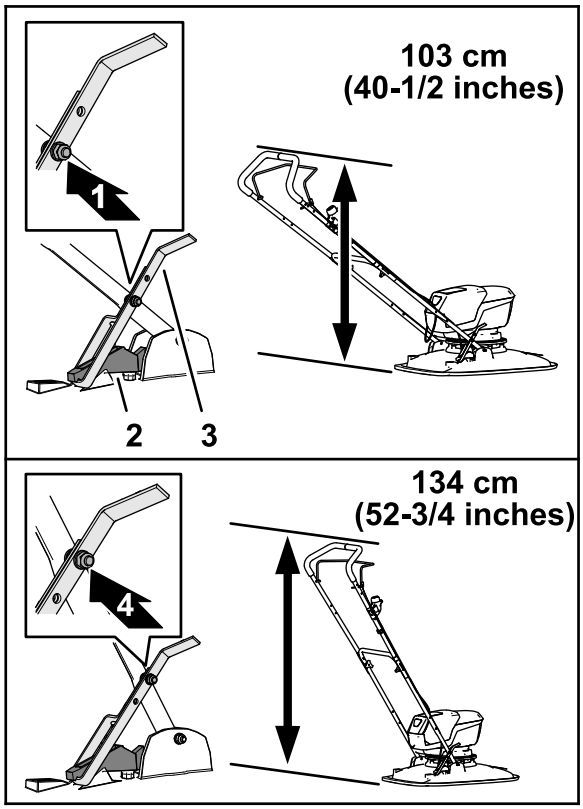

g414363

Figure 3

1. Low-handlebar position
2. Upstop bracket
3. Footstop
4. High-handlebar position

1. Determine the handlebar height when the footstop is secured to the upstop bracket (Figure 3).
2. Align the hole in the footstop with the bolt in the lower handlebar (Figure 4).

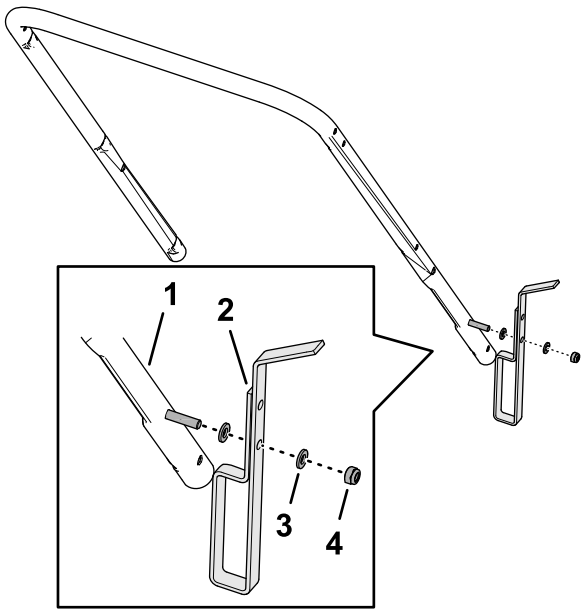

g462033

Figure 4

1. Lower handlebar
2. Footstop
3. Washer (6 mm)
4. Locknut (6 mm)

3. Assemble the footstop to the handlebar with 2 washers (6 mm) and a locknut (6 mm).
4. Tighten the locknut.

   Note: Ensure that you can pivot the footstop.

2

Installing the Handlebar

Parts needed for this procedure:

4	T-bushings
2	Bolt (6 x 55 mm)
7	Washer (6 mm)
2	Locknut (6 mm)
1	Upper handlebar
2	U-bolt
2	Knob
1	Pan-head screw
1	Cable clamp
1	Locknut
2	Cable tie

Assembling the Lower Handlebar to the Machine

1. Assemble 2 T-bushings into the handlebar flanges of the mower deck (Figure 5).

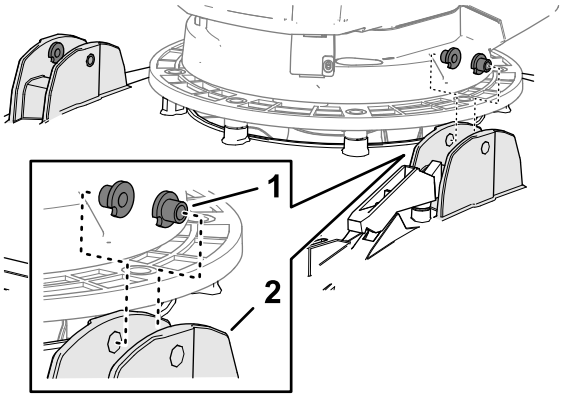

g367117

Figure 5

1. T-bushings
2. Handlebar flanges (mower deck)

2. Align the footstop of the handlebar to the up-stop bracket on the deck (Figure 6).

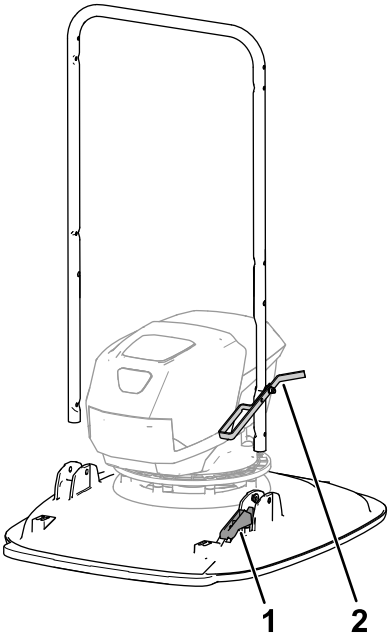

g414364

Figure 6

1. Up-stop bracket
2. Footstop

3. Align the hole in the handlebar with the holes in the bushings (Figure 7), and secure handlebar, to the machine with a bolt (6 x 55 mm), 2 washers (6 mm), and a locknut (6 mm).

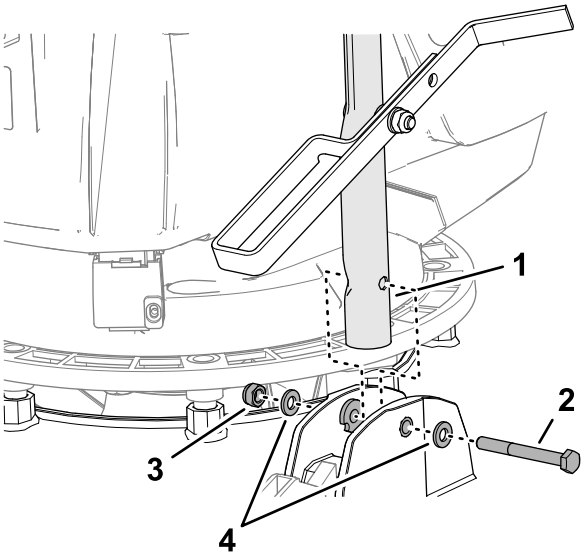

g367302

Figure 7

1. Lower handlebar
2. Bolt (6 x 55 mm)
3. Washer (6 mm)
4. Locknut (6 mm)

4. Repeat step 3 at the other side of the machine.

Assembling the Upper and Lower Handlebars

1. Align the holes on the upper handlebar with the holes in the lower handlebar (Figure 8).

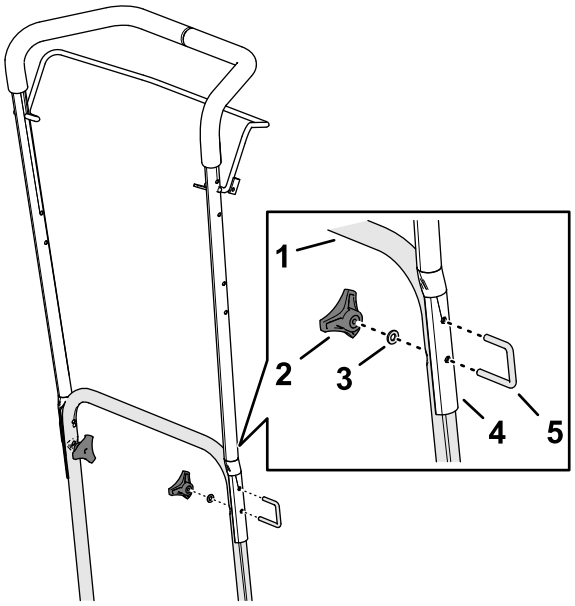

g364684

Figure 8

1. Lower handlebar
2. Knob
3. Washer (6 mm)
4. Upper handlebar
5. U-bolt

2. Assemble the upper handlebar to the lower handlebar wit the 2 U-bolts, 2 washer (6 mm), and 2 knobs.

Assembling the Cable to the Operator-Presence Bail

1. Squeeze the leg of the operator-presence bail until you can remove it from the upper handlebar, and remove the bail from the machine (Figure 9).

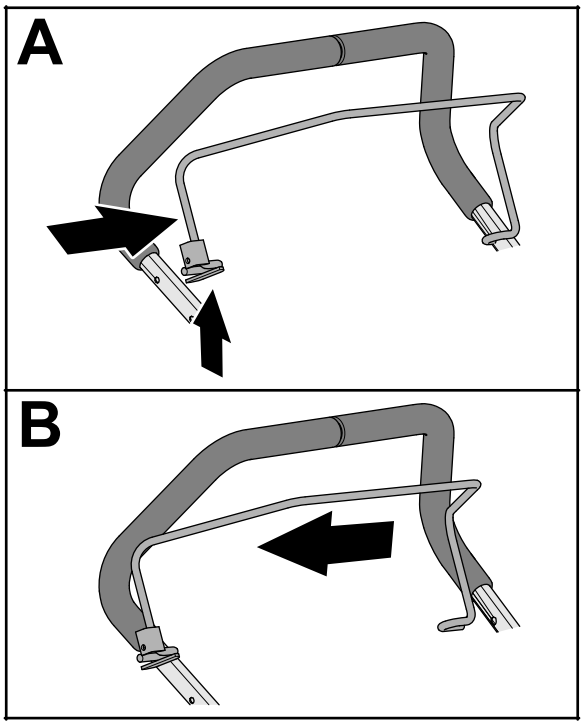

g367353

Figure 9

2. Insert the cable fitting through the hole in the bracket of the operator-presence bail as shown in Figure 10.

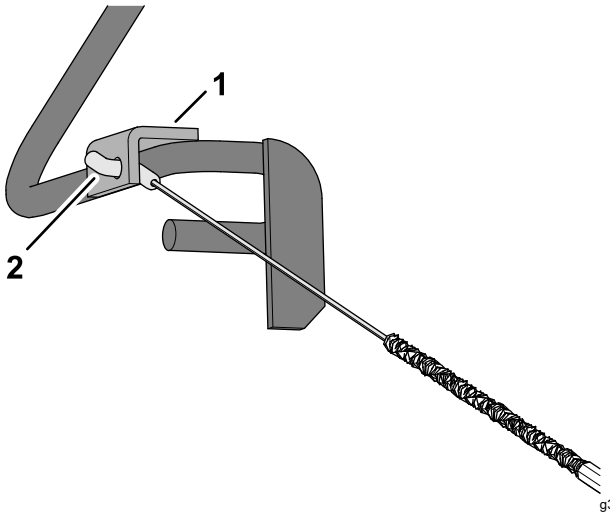

g367914

Figure 10

1. Bracket (operator-presence bail)
2. Cable fitting

3. Insert the end of the operator-presence bail into the handlebar, squeeze the other leg of bail slightly, and insert the bail into the handlebar (Figure 11).

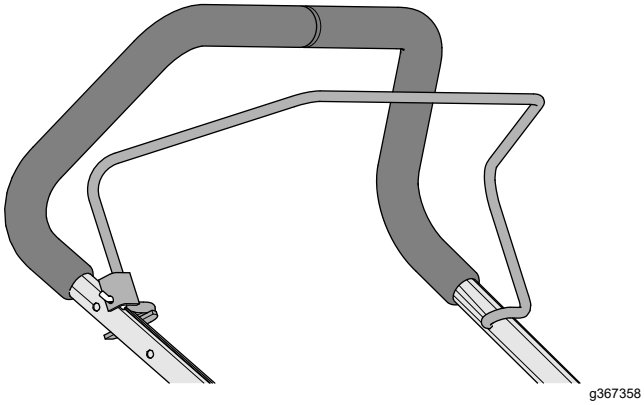

g367358

Figure 11

Installing the Electric-Start Switch

1. Assemble the electric-start switch onto the handlebar as shown (Figure 12).

   Note: Use the lower of the 2 mounting holes on the handlebar.

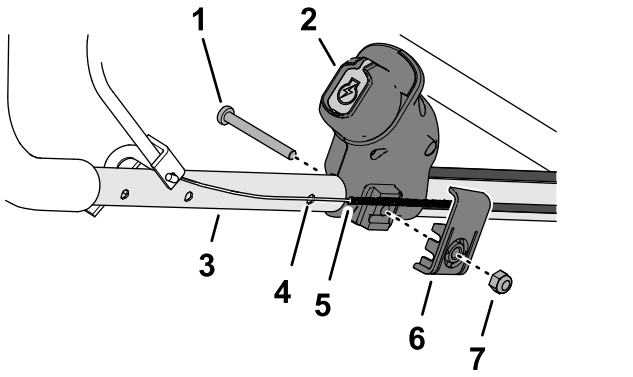

g462046

Figure 12

1. Pan-head screw
2. Electric-start switch
3. Upper handlebar
4. Do not use this hole.
5. Cable (operator-presence bail)
6. Cable clamp
7. Locknut

2. Align the cable for the operator-presence bail to the upper cable groove of the electric-start switch.
3. Align the cable clamp to the cable and switch.
4. Secure the clamp, cable, and switch to the upper handlebar with the pan-head screw and locknut.

Securing Cables to the Handlebar

Secure the cables to the handlebar using cable ties as shown in Figure 13.

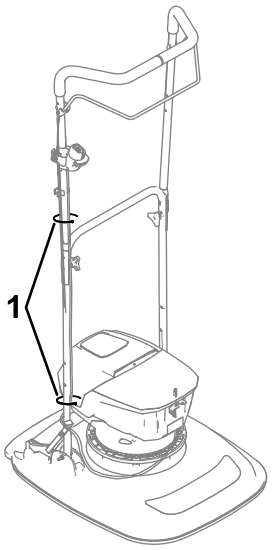

g465529

Figure 13

1. Cable tie

Product Overview

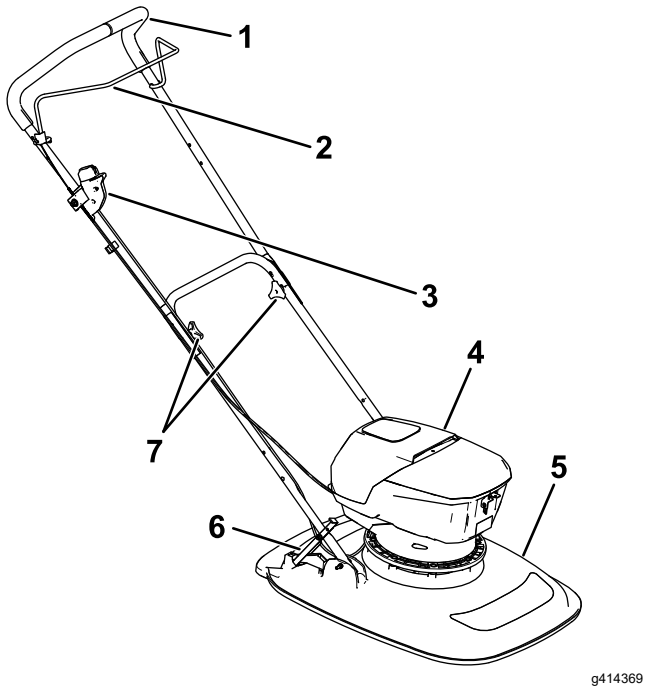

Figure 14

1. Handlebar
2. Operator-presence bail
3. Electric-start button/switch
4. Battery-compartment cover
5. Mower deck
6. Handlebar footstop
7. Handlebar knobs

Controls

Operator-Presence Bail

The operator-presence bail (Figure 14) controls the power to the motor.

- Squeeze the bail to the handlebar to run the motor.
- Release the bail to the handlebar to shut off the motor.

Electric-Start Button

The electric-start button (Figure 14) inserts into the electric-start switch, and together they are used to control the electric motor.

Specifications

Machine Specification

Model	Cutting width	Product width
02614T	465 mm (18-1/2 inches)	575 mm (22-1/2 inches)

Charging, Operation, and Storage Temperature Ranges

Temperature Range Specification

Charging or Storing the Battery Pack	Using the Battery Pack	Using the Machine
5°C (41°F) to 40°C (104°F)*	-30°C (-22°F) to 49°C (120°F)*	0°C (32°F) to 49°C (120°F)*

*Charging time may increase if you do not charge the battery pack within the specified temperature range.

Store the machine, battery pack, and battery charger in an enclosed, clean, and dry area.

Attachments/Accessories

A selection of Toro approved attachments and accessories is available for use with the machine to enhance and expand its capabilities. Contact your Authorized Service Dealer or authorized Toro distributor or go to www.Toro.com for a list of all approved attachments and accessories.

To ensure optimum performance and continued safety certification of the machine, use only genuine Toro replacement parts and accessories. Replacement parts and accessories made by other manufacturers could be dangerous.

Operation

Before Operation

Inserting the Battery Pack into the Machine

Important: **Use the battery pack only in temperatures that are within the appropriate range; refer to Specifications (page 12)**

1. Remove the electric-start button from the electric-start switch; refer to Running the Machine (page 14).
2. Check the battery pack to ensure that vents are clear of any dust and debris.
3. Open the battery-compartment cover (Figure 15).
4. Align the electrical contacts of the battery pack with the electrical contacts in the battery compartment.
5. Assemble the battery pack onto the compartment-electrical contacts until the battery latches securely.
6. Close the battery-compartment cover.

   Note: If the battery-compartment cover does not completely close, the battery is not fully inserted and latched into the compartment.

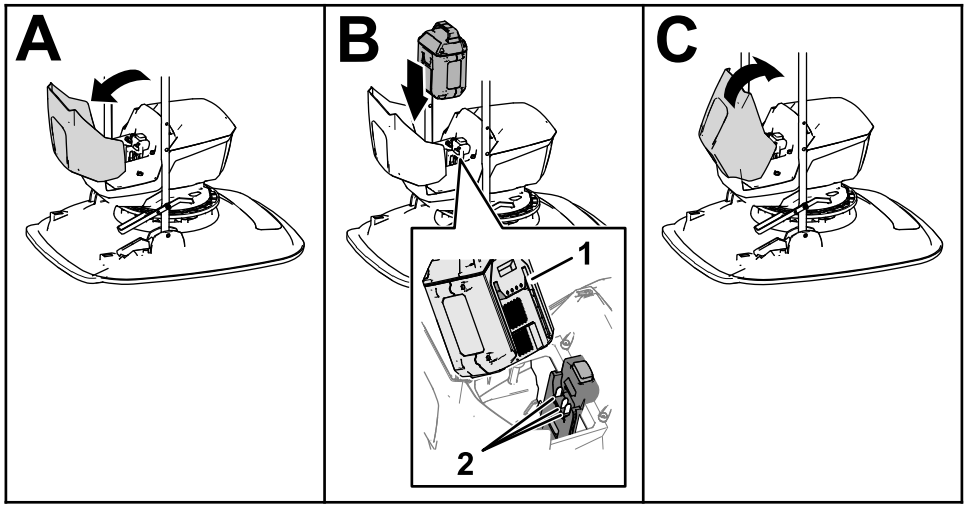

g414371

Figure 15

1. Battery pack electrical contacts
2. Battery compartment electrical contacts

During Operation

Running the Machine

1. Insert the electric-start key into the electric-start switch (Figure 16).

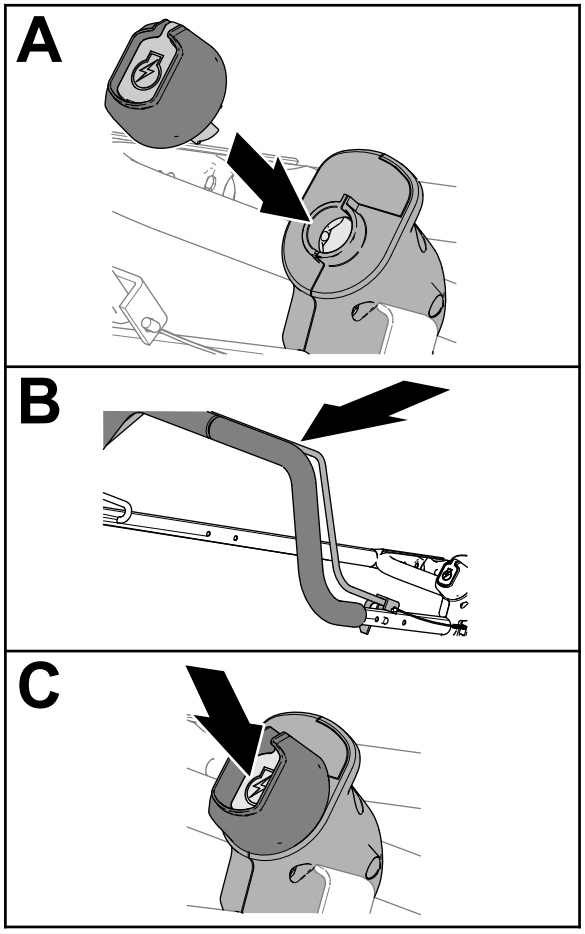

g367528

Figure 16

2. Grasp the handlebar and operator presence bail and close the bail against the handlebar (Figure 16).
3. Push the starter-button.
4. Allow the motor to run at full speed before moving the machine.

Shutting Off the Machine

1. Release the operator presence bail (Figure 17).

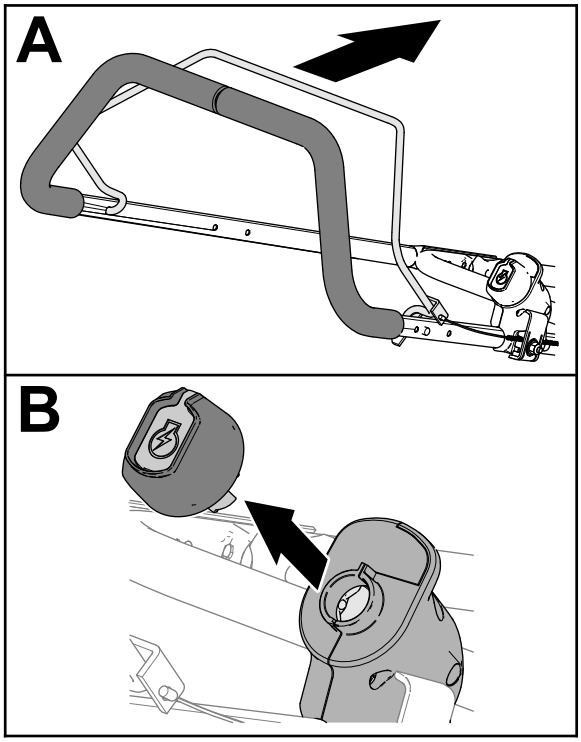

g367527

Figure 17

2. Hold the handlebar while you wait for the motor to stop.
3. Remove the electric-start key from the electric-start switch.

Removing the Battery Pack from the Machine

1. Shut off the machine; refer to Shutting Off the Machine (page 14).
2. Open the battery-compartment cover (Figure 18).
3. Press the battery-pack latch to release the battery pack and remove the battery pack.
4. Close the battery-compartment cover.

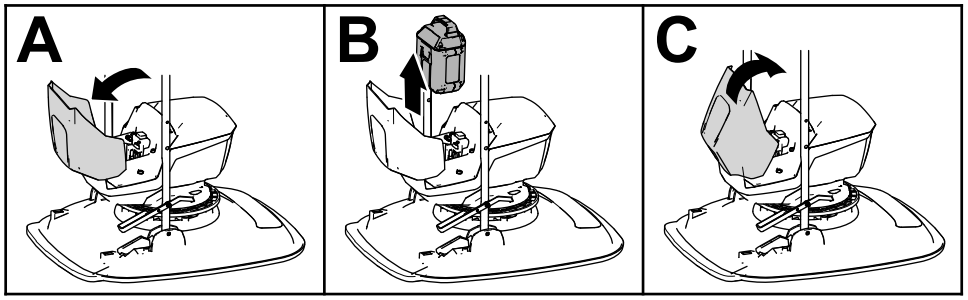

g414370

Figure 18

Supporting the Handlebar with the Footstop

Handlebar Assembled in the Lower Position

Note: If you assembled to the low-handlebar position 103 cm (40-1/2 inches), use the footstop to support the handlebar in the vertical position.

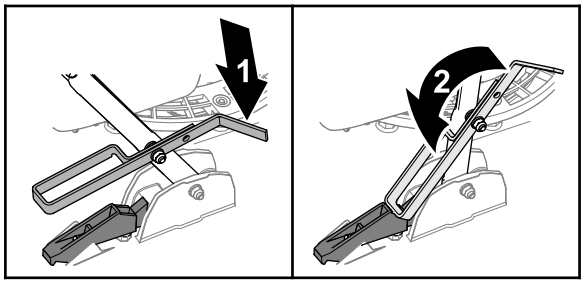

g367257

Figure 19

1. Footstop rotated forward
2. Footstop rotated rearward

- To release the handlebar, lift the handlebar and rotate the footstop forward (Figure 19).
- To support the handlebar, position the handlebar and rotate the footstop rearward.

Adjusting the Cutting Height

⚠ WARNING

Adjusting the cutting height may bring you into contact with the moving blade, causing serious injury.

- **Release the operator-presence bail and wait for all moving parts to stop.**
- **Wear cut-resistant gloves while handling the blade.**

Removing the Blade

1. Shut off the machine, remove the electric-start button, and remove the battery; refer to Shutting Off the Machine (page 14).
2. Tip the machine on its side.

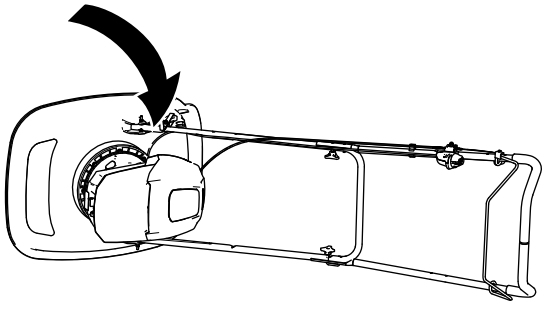

g414372

Figure 20

3. Use a block of wood to hold the blade steady (Figure 21).

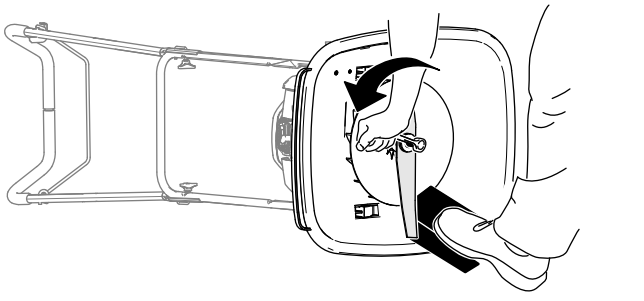

g364888

Figure 21

4. Use a wrench to remove the blade by rotating the bolt counterclockwise (Figure 21).

   Important: **Wear safety glasses and cut-resistant gloves when removing the blade.**

Positioning the Blade Spacers

Change the position of the spacers to adjust the cutting height as shown in Figure 22.

Note: Each spacer changes the cutting height of the blade 6.3 mm (1/4 inch).

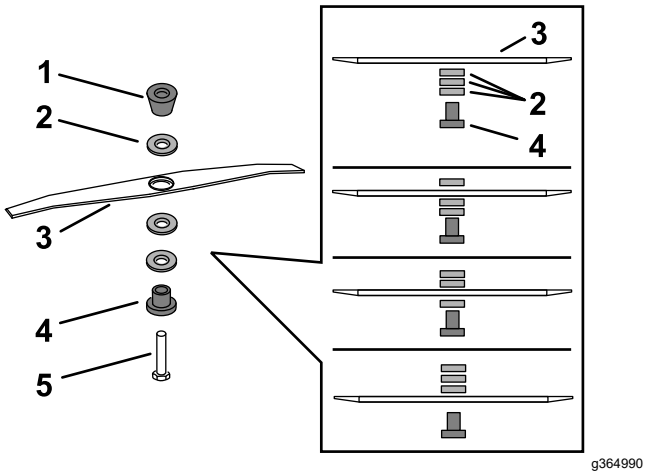

g364990

Figure 22

1. Conical spacer
2. Spacers
3. Blade
4. Retainer
5. Bolt

Installing the Blade

1. Align the curved ends of the blade toward mower deck, and assemble the retainer, blade, spacers, and conical spacer to the impeller with the bolt.

   Important: **Always assemble the conical spacer directly below the impeller and the retainer under the head of the bolt.**

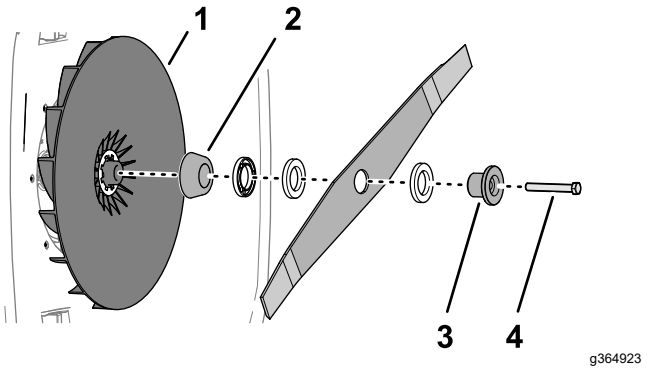

g364923

Figure 23

1. Impeller
2. Conical spacer
3. Retainer
4. Bolt

2. Torque the blade bolt to 75 N·m (55 ft-lb).

   Important: **A bolt torqued to 75 N·m (55 ft-lb) is very tight. While holding the cutting blade with block of wood, put your weight behind the torque wrench, and tighten the bolt.**

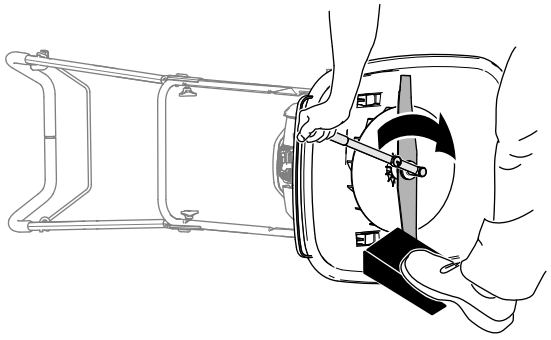

g364889

Figure 24

3. Tip the machine upright.

Operating Tips

General Mowing Tips

- Place the hoop of the footstop under the upstop to increase handling of the machine.

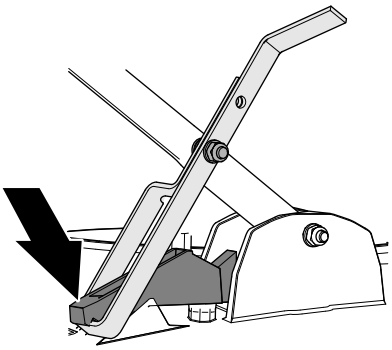

g367278

Figure 25

- Inspect the area where you will use the machine and remove all objects that the machine could throw.
- Avoid striking solid objects with the blade. Never deliberately mow over any object.
- If the machine strikes an object or starts to vibrate, immediately shut off the motor, remove the electric-start key, and examine the machine for damage.
- For best performance, ensure that the blade is sharp before the cutting season begins.
- Replace a damaged blade with a new Toro replacement blade.

Cutting Grass

- Cut only about a third of the grass blade at a time. Do not cut below the highest setting (30 mm or 1-1/4 inches) unless the grass is sparse, or it is late fall when grass growth begins to slow down.
- Do not mow grass over 15 cm (6 inches) long because the machine may plug or the motor may stall.
- Wet grass and leaves tend to clump on the yard and can cause the machine to plug or the motor to stall. Mow only in dry conditions if possible.

⚠ WARNING

Wet grass or leaves can cause serious injury if you slip and contact the cutting blade.

Mow only in dry conditions if possible.

- Be aware of a potential fire hazard in very dry conditions, follow all local fire warnings, and keep the machine free of dry grass and leaf debris.
- If the finished lawn appearance is unsatisfactory, try 1 or more of the following:
  - Inspect the cutting unit and/or replace the cutting blade.
  - Walk at a slower pace while mowing.
  - Raise the cutting height on your machine.
  - Cut the grass more frequently.
  - Overlap cutting swaths instead of cutting a full swath with each pass.

Cutting Leaves

- After cutting the lawn, ensure that half of the lawn shows through the cut leaf cover. You may need to make more than a single pass over the leaves.
- Mowing grass over 15 cm (6 inches) in length is not recommended. If the leaf cover is too thick, the machine may plug and cause the motor to stall.
- Slow down your mowing speed if the machine does not cut the leaves finely enough.

After Operation

Charging the Battery Pack

Important: **The battery pack is not fully charged when you purchase it. Before using the tool for the first time, place the battery pack in the charger and charge it until the LED display indicates the battery pack is fully charged. Read all safety precautions.**

Important: **Charge the battery pack only at an ambient temperature that are within the specified temperature range; refer to Charging, Operation, and Storage Temperature Ranges (page 12).**

Note: At any time, press the battery-charge-indicator button on the battery pack to display the current charge (LED indicators).

1. Ensure that the vents on the battery and charger are clear of any dust and debris.

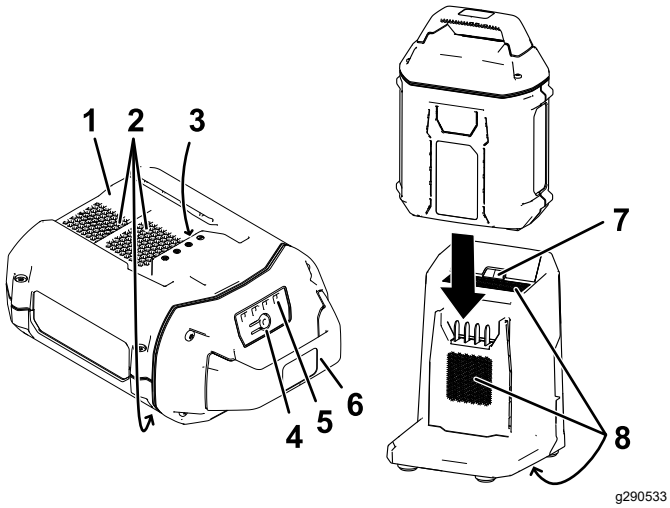

Figure 26

1. Battery pack cavity
2. Battery pack venting areas
3. Battery pack electrical contacts
4. Battery-charge-indicator button
5. LED indicators (current charge)
6. Handle
7. Charger LED indicator light
8. Charger venting areas
9. Adapter charger

2. Line up the cavity in the battery pack (Figure 26) with the tongue on the charger.
3. Slide the battery pack into the charger until it is fully seated (Figure 26).
4. Wait for the battery pack to charge; refer to the following Battery Charger Status Table to interpret the battery charger status.

Battery Charger Status Table

LED indicator light	Indicates
Off	No battery pack is inserted
Green blinking	Battery pack is charging
Green	Battery pack is charged
Red	Battery pack and/or battery charger is over or under the specified temperature range*
Red blinking	Battery pack charging fault**

*Refer to Charging, Operation, and Storage Temperature Ranges (page 12) for more information.

**Refer to Troubleshooting (page 22) for more information.

Important: **The battery can be left on the charger for short periods between uses.**

If the battery will not be used for longer periods, remove the battery from the charger; refer to Preparing the Machine for Storage (page 21).

5. To remove the battery pack, pull the battery from the charger.

Maintenance

Note: Determine the left and right sides of the machine from the normal operating position.

Recommended Maintenance Schedule(s)

Maintenance Service Interval	Maintenance Procedure
Before each use or daily	• Check the blade for wear or damage. If the blade is damaged, replace it immediately. • Clean grass clippings and dirt from the entire machine.
After each use	• Clean grass clippings and dirt from the entire machine.
Yearly	• Replace the blade or have it sharpened (more frequently if the edge dulls quickly).

Preparing for Maintenance

1. Move the machine to a level surface.
2. Shut off the machine, remove the electric-start button, and remove the battery; refer to Shutting Off the Machine (page 14).

Blade Maintenance

⚠ WARNING

When servicing the blade, the blade can still move even though the power source is off. The blade is sharp; contacting the blade can result in serious personal injury.

- **Keep your hands and feet away from a moving blade.**
- **Wear gloves when servicing the blade.**

Checking the Blade

Service Interval: Before each use or daily If the blade is damaged, replace it immediately.

1. Prepare the machine for maintenance; refer to Preparing for Maintenance (page 19).
2. Tip the machine onto its side.

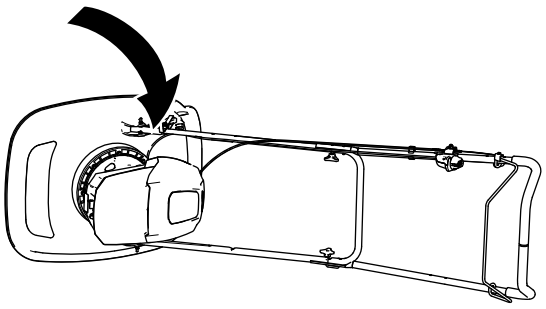

g414372

Figure 27

3. Check the blade for wear or damage.
   - If the blade is damaged or cracked, remove and replace it immediately.
   - If the blade edge is dull or nicked, remove it, have it sharpened or replaced, and install the blade.
4. Tip the machine upright.

Replacing the Blade

Service Interval: Yearly

Important: **You need a torque wrench to install the blade. If you do not have a torque wrench or are uncomfortable performing this procedure, contact an Authorized Service Dealer or authorized Toro distributor.**

Removing the Blade

1. Prepare the machine for maintenance; refer to Preparing for Maintenance (page 19).
2. Tip the machine onto its side.

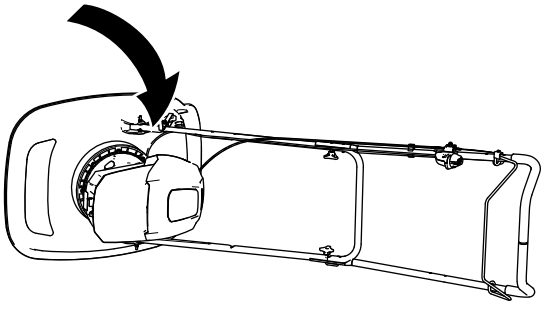

g414372

Figure 28

3. Record the position of the spacers.

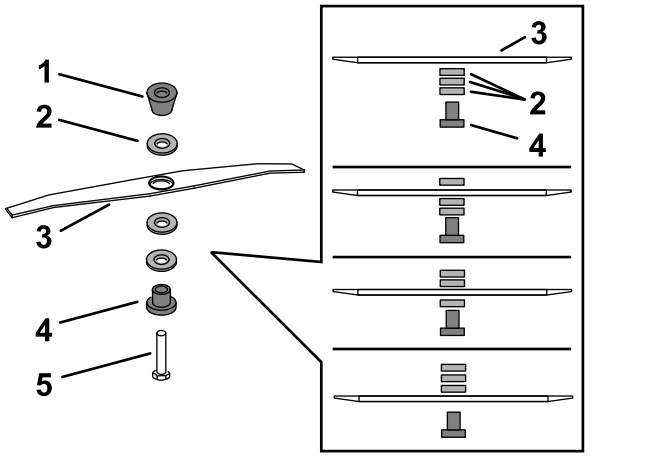

Figure 29

1. Conical spacer
2. Spacers
3. Blade
4. Retainer
5. Bolt

4. Use a block of wood to hold the blade steady (Figure 30).

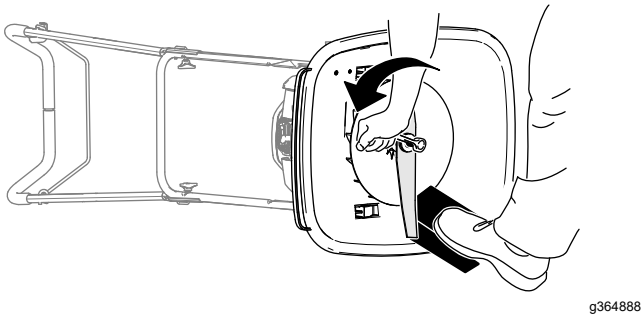

Figure 30

5. Use the wrench provided with the machine to remove the blade by rotating the blade bolt counterclockwise (Figure 29).

   Important: **Wear safety glasses and cut resistant gloves when removing the blade.**

Installing the Blade

1. Align the curved ends of the blade toward mower deck, and assemble the retainer, blade, spacers, and conical spacer to the impeller with the bolt.

   Important: **You must always assemble the conical spacer directly below the impeller and the retainer under the head of the bolt.**

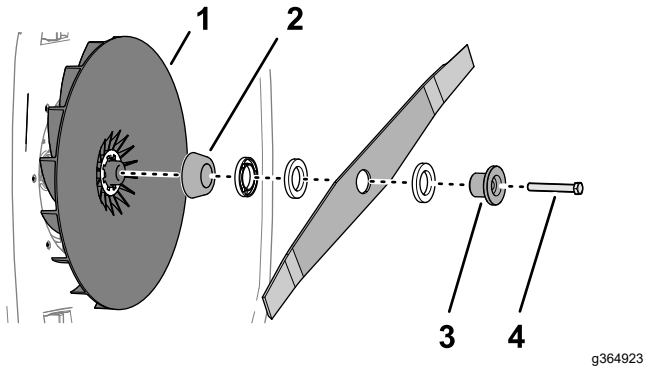

Figure 31

1. Impeller
2. Conical spacer
3. Retainer
4. Bolt

2. Torque the blade bolt to 75 N·m (55 ft-lb).

   Important: **A bolt torqued to 75 N·m (55 ft-lb) is very tight. While holding the cutting blade with block of wood, put your weight behind the torque wrench, and tighten the bolt.**

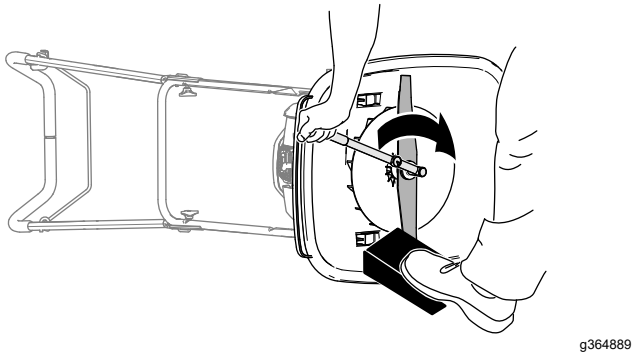

Figure 32

3. Tip the machine upright.

Cleaning the Machine

Service Interval: Before each use or daily

After each use

⚠ WARNING

The machine may dislodge material from under the machine housing.

- **Wear eye protection.**
- **Stay in the operating position (behind the handlebar).**
- **Do not allow bystanders in the area.**

1. Shut off the machine, remove the electric-start button, and remove the battery; refer to Shutting Off the Machine (page 14).
2. Tip the machine on its side.
3. Use a brush or compressed air to remove grass and debris from the motor housing and the surrounding deck areas.

Storage

Important: **Store the machine, battery pack, and charger only in temperatures that are within the specified range; refer to Charging, Operation, and Storage Temperature Ranges (page 12).**

Preparing the Machine for Storage

1. Clean the machine.
2. Remove the electric-start key from the electric-start switch.
3. Remove the battery pack and check it for damage.

   Note: Do not store the machine with the battery pack installed.
4. Charge the battery pack until 2 or 3 LED indicators turn green on the battery.

   Important: **Do not store a fully charged or fully depleted battery**
5. Check the blade for wear or damage. If the blade is dull, have it sharpened; if the blade is damaged, replace it.
6. Tighten all nuts, bolts, and screws.
7. Store the machine, battery pack, and battery charger in a cool, clean, dry place.
   - Store the machine, electric-start key, battery pack, and battery charger away from children.
   - Keep the machine, battery pack, and battery charger away from corrosive agents, such as garden chemicals and de-icing salts.
   - Do not store the battery pack outside or a vehicle.

Preparing the Machine for the Operation

1. Charge the battery back until the left indicator light turns green on the charger or all 4 LED indicators turn green on the battery.
2. Insert the battery pack into the machine; refer to Inserting the Battery Pack into the Machine (page 13).

Troubleshooting

Perform only the steps described in these instructions. Have an Authorized Service Dealer or authorized Toro distributor complete all further inspection, maintenance, and repair work if you cannot fix the problem.

Problem	Possible Cause	Corrective Action
The machine does not start.	1. The battery pack is not fully installed in the machine.	1. Remove the battery pack and then install it into the machine, making sure that it is fully inserted and latched.
	2. The battery pack is not charged.	2. Remove the battery pack from the machine and charge it.
	3. The battery pack is damaged.	3. Replace the battery pack.
	4. There is another electrical problem with the machine.	4. Contact an Authorized Service Dealer or authorized Toro distributor.
The machine does not run continuously.	1. There is moisture on the leads of the battery pack.	1. Allow the battery pack to dry or wipe it dry.
	2. The battery pack is not fully installed into the machine.	2. Remove the battery pack and then install it into the machine, making sure that it is fully inserted and latched.
The machine does not reach full power.	1. The battery pack charge capacity is too low.	1. Remove the battery pack from the machine and fully charge the battery pack.
	2. The air vents are blocked.	2. Clean the air vents.
The battery pack loses charge quickly.	1. The battery pack is over or under the specified temperature range.	1. Move the battery pack to a place where it is dry, and the temperature is between 5°C (41°F) and 40°C (104°F).
The battery charger is not working.	1. The battery charger is over or under the specified temperature range.	1. Unplug the battery charger and move it to a place where it is dry, and the temperature is between 5°C (41°F) and 40°C (104°F).
	2. The outlet that the battery charger is plugged into does not have power.	2. Contact your licensed electrician to repair the outlet.
The LED indicator light on the battery charger is red.	1. The battery charger and/or battery pack is over or under the specified temperature range.	1. Unplug the battery charger and move the battery charger and battery pack to a place where it is dry, and the temperature is between 5°C (41°F) and 40°C (104°F).
The LED indicator light on the battery charger is blinking red.	1. There is an error in the communication between the battery pack and the charger.	1. Remove the battery pack from the battery charger, unplug the battery charger from the outlet, and wait 10 seconds. Plug the battery charger into the outlet again and place the battery pack on the battery charger. If the LED indicator light on the battery charger is still blinking red, repeat this procedure again. If the LED indicator light on the battery charger is still blinking red after 2 attempts, properly dispose of the battery pack at a battery recycling facility.
	2. The battery pack is weak.	2. Properly dispose of the battery pack at a battery recycling facility.
The machine or motor vibrates excessively.	1. The underside of the machine housing contains clippings and debris.	1. Clean under the machine housing.
	2. The motor mounting bolts are loose.	2. Tighten the motor mounting bolts.
	3. The cutting disk bolt is loose.	3. Tighten the cutting disk bolt.

Problem	Possible Cause	Corrective Action
The machine is producing a beeping sound.	1. The battery pack is not charged. 2. The machine is overloaded. 3. There is another electrical problem with the machine.	1. Remove the battery pack from the machine and charge it. 2. Cut the grass at a higher height of cut or walk at a slower pace while mowing. 3. Attempt the other troubleshooting actions, if the alarm still sounds, contact an Authorized Service Dealer.
The quality of cut is decreased or unsatisfactory.	1. The blade is dull. 2. The cutting deck has debris buildup.	1. Have the blade sharpened or replaced. 2. Clean under the machine.
There is an uneven cutting pattern.	1. You are cutting in the same pattern repeatedly. 2. The underside of the machine housing contains clippings and debris.	1. Change the cutting pattern. 2. Clean under the machine housing.
The machine is cutting unevenly.	1. The blade is dull. 2. You are cutting in the same pattern repeatedly. 3. The underside of the machine housing contains clippings and debris. 4. There is an electrical problem with the machine.	1. Have the blade sharpened or replaced. 2. Change the cutting pattern. 3. Clean under the machine housing. 4. Contact an Authorized Service Dealer or authorized Toro distributor.

Notes:

Notes:

The Toro Warranty

Two-Year or 1,500 Hours Limited Warranty

Conditions and Products Covered

The Toro Company warrants your Toro Commercial product (“Product”) to be free from defects in materials or workmanship for 2 years or 1,500 operational hours*, whichever occurs first. This warranty is applicable to all products with the exception of Aerators (refer to separate warranty statements for these products). Where a warrantable condition exists, we will repair the Product at no cost to you including diagnostics, labor, parts, and transportation. This warranty begins on the date the Product is delivered to the original retail purchaser.
* Product equipped with an hour meter.

Instructions for Obtaining Warranty Service

You are responsible for notifying the Commercial Products Distributor or Authorized Commercial Products Dealer from whom you purchased the Product as soon as you believe a warrantable condition exists. If you need help locating a Commercial Products Distributor or Authorized Dealer, or if you have questions regarding your warranty rights or responsibilities, you may contact us at:

Toro Commercial Products Service Department
8111 Lyndale Avenue South
Bloomington, MN 55420-1196

952–888–8801 or 800–952–2740
E-mail: commercial.warranty@toro.com

Owner Responsibilities

As the product owner, you are responsible for required maintenance and adjustments stated in your *Operator's Manual*. Repairs for product issues caused by failure to perform required maintenance and adjustments are not covered under this warranty.

Items and Conditions Not Covered

Not all product failures or malfunctions that occur during the warranty period are defects in materials or workmanship. This warranty does not cover the following:

- Product failures which result from the use of non-Toro replacement parts, or from installation and use of add-on, or modified non-Toro branded accessories and products.
- Product failures which result from failure to perform recommended maintenance and/or adjustments.
- Product failures which result from operating the Product in an abusive, negligent, or reckless manner.
- Parts consumed through use that are not defective. Examples of parts which are consumed, or used up, during normal Product operation include, but are not limited to, brake pads and linings, clutch linings, blades, reels, rollers and bearings (sealed or greasable), bed knives, spark plugs, castor wheels and bearings, tires, filters, belts, and certain sprayer components such as diaphragms, nozzles, flow meters, and check valves.
- Failures caused by outside influence, including, but not limited to, weather, storage practices, contamination, use of unapproved fuels, coolants, lubricants, additives, fertilizers, water, or chemicals.
- Failure or performance issues due to the use of fuels (e.g. gasoline, diesel, or biodiesel) that do not conform to their respective industry standards.
- Normal noise, vibration, wear and tear, and deterioration. Normal “wear and tear” includes, but is not limited to, damage to seats due to wear or abrasion, worn painted surfaces, scratched decals or windows.

Parts

Parts scheduled for replacement as required maintenance are warranted for the period of time up to the scheduled replacement time for that part. Parts replaced under this warranty are covered for the duration of the original product warranty and become the property of Toro. Toro will make the final decision whether to repair any existing part or assembly or replace it. Toro may use remanufactured parts for warranty repairs.

Deep Cycle and Lithium-Ion Battery Warranty

Deep cycle and Lithium-Ion batteries have a specified total number of kilowatt-hours they can deliver during their lifetime. Operating, recharging, and maintenance techniques can extend or reduce total battery life. As the batteries in this product are consumed, the amount of useful work between charging intervals will slowly decrease until the battery is completely worn out. Replacement of worn out batteries, due to normal consumption, is the responsibility of the product owner.
Note: (Lithium-Ion battery only): Refer to the battery warranty for additional information.

Lifetime Crankshaft Warranty (ProStripe 02657 Model Only)

The Prostripe which is fitted with a genuine Toro Friction Disc and Crank-Safe Blade Brake Clutch (integrated Blade Brake Clutch (BBC) + Friction Disc assembly) as original equipment and used by the original purchaser in accordance with recommended operating and maintenance procedures, are covered by a Lifetime Warranty against engine crankshaft bending. Machines fitted with friction washers, Blade Brake Clutch (BBC) units and other such devices are not covered by the Lifetime Crankshaft Warranty.

Maintenance is at Owner’s Expense

Engine tune-up, lubrication, cleaning and polishing, replacement of filters, coolant, and completing recommended maintenance are some of the normal services Toro products require that are at the owner’s expense.

General Conditions

Repair by an Authorized Toro Distributor or Dealer is your sole remedy under this warranty.

The Toro Company is not liable for indirect, incidental or consequential damages in connection with the use of the Toro Products covered by this warranty, including any cost or expense of providing substitute equipment or service during reasonable periods of malfunction or non-use pending completion of repairs under this warranty. Except for the Emissions warranty referenced below, if applicable, there is no other express warranty. All implied warranties of merchantability and fitness for use are limited to the duration of this express warranty.

Some states do not allow exclusions of incidental or consequential damages, or limitations on how long an implied warranty lasts, so the above exclusions and limitations may not apply to you. This warranty gives you specific legal rights, and you may also have other rights which vary from state to state.

Note Regarding Emissions Warranty

The Emissions Control System on your Product may be covered by a separate warranty meeting requirements established by the U.S. Environmental Protection Agency (EPA) and/or the California Air Resources Board (CARB). The hour limitations set forth above do not apply to the Emissions Control System Warranty. Refer to the Engine Emission Control Warranty Statement supplied with your product or contained in the engine manufacturer’s documentation.

Countries Other than the United States or Canada

Customers who have purchased Toro products exported from the United States or Canada should contact their Toro Distributor (Dealer) to obtain guarantee policies for your country, province, or state. If for any reason you are dissatisfied with your Distributor's service or have difficulty obtaining guarantee information, contact your Authorized Toro Service Center.

California Proposition 65 Warning Information

What is this warning?

You may see a product for sale that has a warning label like the following:



WARNING: Cancer and Reproductive Harm—www.p65Warnings.ca.gov.

What is Prop 65?

Prop 65 applies to any company operating in California, selling products in California, or manufacturing products that may be sold in or brought into California. It mandates that the Governor of California maintain and publish a list of chemicals known to cause cancer, birth defects, and/or other reproductive harm. The list, which is updated annually, includes hundreds of chemicals found in many everyday items. The purpose of Prop 65 is to inform the public about exposure to these chemicals.

Prop 65 does not ban the sale of products containing these chemicals but instead requires warnings on any product, product packaging, or literature with the product. Moreover, a Prop 65 warning does not mean that a product is in violation of any product safety standards or requirements. In fact, the California government has clarified that a Prop 65 warning "is not the same as a regulatory decision that a product is 'safe' or 'unsafe.'" Many of these chemicals have been used in everyday products for years without documented harm. For more information, go to https://oag.ca.gov/prop65/faqs-view-all.

A Prop 65 warning means that a company has either (1) evaluated the exposure and has concluded that it exceeds the "no significant risk level"; or (2) has chosen to provide a warning based on its understanding about the presence of a listed chemical without attempting to evaluate the exposure.

Does this law apply everywhere?

Prop 65 warnings are required under California law only. These warnings are seen throughout California in a wide range of settings, including but not limited to restaurants, grocery stores, hotels, schools, and hospitals, and on a wide variety of products. Additionally, some online and mail order retailers provide Prop 65 warnings on their websites or in catalogs.

How do the California warnings compare to federal limits?

Prop 65 standards are often more stringent than federal and international standards. There are various substances that require a Prop 65 warning at levels that are far lower than federal action limits. For example, the Prop 65 standard for warnings for lead is 0.5 µg/day, which is well below the federal and international standards.

Why don't all similar products carry the warning?

- Products sold in California require Prop 65 labelling while similar products sold elsewhere do not.
- A company involved in a Prop 65 lawsuit reaching a settlement may be required to use Prop 65 warnings for its products, but other companies making similar products may have no such requirement.
- The enforcement of Prop 65 is inconsistent.
- Companies may elect not to provide warnings because they conclude that they are not required to do so under Prop 65; a lack of warnings for a product does not mean that the product is free of listed chemicals at similar levels.

Why does Toro include this warning?

Toro has chosen to provide consumers with as much information as possible so that they can make informed decisions about the products they buy and use. Toro provides warnings in certain cases based on its knowledge of the presence of one or more listed chemicals without evaluating the level of exposure, as not all the listed chemicals provide exposure limit requirements. While the exposure from Toro products may be negligible or well within the "no significant risk" range, out of an abundance of caution, Toro has elected to provide the Prop 65 warnings. Moreover, if Toro does not provide these warnings, it could be sued by the State of California or by private parties seeking to enforce Prop 65 and subject to substantial penalties.



Count on it.