Owner's Manual

CRAFTSMAN®

5.5 HP
17 INCH TINE WIDTH
REAR TINE WITH
COUNTER ROTATING TINES

TILLER

Model No.
917.293300

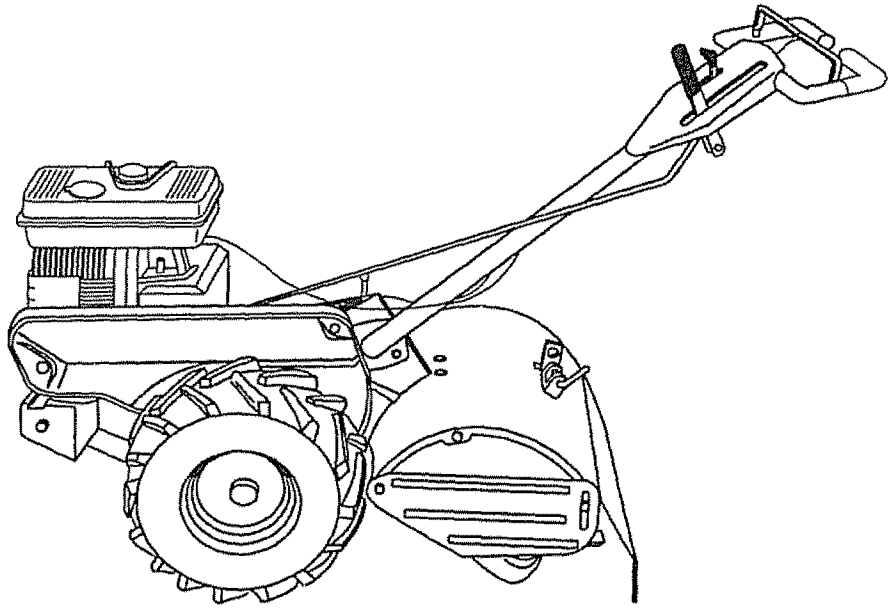

- **Safety**
- **Assembly**
- **Operation**
- **Maintenance**
- **Repair Parts**

This product has a low emission engine which operates differently from previously built engines. Before you start the engine, read and understand this Owner's Manual.

CAUTION:

Read and follow all
Safety Rules and Instructions
before operating this equipment

Sears, Roebuck and Co., Hoffman Estates, IL 60179

TABLE OF CONTENTS

Warranty 2
Safety Rules 2
Product Specifications 4
Assembly 5
Operation ..... 3 & 8
Maintenance 13
Service and Adjustments 15
Storage ..... 3 & 19
Troubleshooting 20
Illustrated Parts List 22
Parts Ordering ..... Back Cover

WARRANTY

LIMITED TWO YEAR WARRANTY ON CRAFTSMAN TILLER

For two (2) years from date of purchase, when this Craftsman Tiller is maintained, lubricated, and tuned up according to the operating and maintenance instructions in the owner's manual, Sears will repair free of charge any defect in material or workmanship. This Warranty does not cover:

- Expendable items which become worn during normal use, such as tines, spark plugs, air cleaners and belts.
- Repairs necessary because of operator abuse or negligence, including bent crankshafts and the failure to maintain the equipment according to the instructions contained in the owner's manual.
- If this Craftsman Tiller is used for commercial or rental purposes, this Warranty applies for only thirty (30) days from the date of purchase.

Warranty service is available by returning the craftsman power mower to the nearest sears service center/department in the united states. This warranty applies only while this product is in use in the united states.

This Warranty gives you specific legal rights, and you may also have other rights which vary from state to state.

SEARS, ROEBUCK AND CO., D/817WA, HOFFMAN ESTATES, IL 60179

SAFETY RULES

TRAINING

- Read the Owner's Manual carefully. Be thoroughly familiar with the controls and the proper use of the equipment. Know how to stop the unit and disengage the controls quickly.
- Never allow children to operate the equipment. Never allow adults to operate the equipment without proper instruction.
- Keep the area of operation clear of all persons, particularly small children, and pets.

PREPARATION

- Thoroughly inspect the area where the equipment is to be used and remove all foreign objects.
- Disengage all clutches and shift into neutral before starting the engine (motor).
- Do not operate the equipment without wearing adequate outer garments. Wear footwear that will improve footing on slippery surfaces.
- Handle fuel with care; it is highly flammable.
- Use an approved fuel container.
- Never add fuel to a running engine or hot engine.
- Fill fuel tank outdoors with extreme care. Never fill fuel tank indoors.
- Replace gasoline cap securely and clean up spilled fuel before restarting.
- Use extension cords and receptacles as specified by the manufacturer for all units with electric drive motors or electric starting motors.
- Never attempt to make any adjustments while the engine (motor) is running (except where specifically recommended by manufacturer).

OPERATION

- Do not put hands or feet near or under rotating parts.
- Exercise extreme caution when operating on or crossing gravel drives, walks, or roads. Stay alert for hidden hazards or traffic. Do not carry passengers.
- After striking a foreign object, stop the engine (motor), remove the wire from the spark plug, thoroughly inspect the tiller for any damage, and repair the damage before restarting and operating the tiller.
- Exercise caution to avoid slipping or falling.
- If the unit should start to vibrate abnormally, stop the engine (motor) and check immediately for the cause. Vibration is generally a warning of trouble.
- Stop the engine (motor) when leaving the operating position.
- Take all possible precautions when leaving the machine unattended. Disengage the tines, shift into neutral, and stop the engine.
- Before cleaning, repairing, or inspecting, shut off the engine and make certain all moving parts have stopped. Disconnect the spark plug wire, and keep the wire away from the plug to prevent accidental starting. Disconnect the cord on electric motors.
- Do not run the engine indoors; exhaust fumes are dangerous.
- Never operate the tiller without proper guards, plates, or other safety protective devices in place.
- Keep children and pets away.
- Do not overload the machine capacity by attempting to till too deep at too fast a rate.
- Never operate the machine at high speeds on slippery surfaces. Look behind and use care when backing.
- Never allow bystanders near the unit.
- Use only attachments and accessories approved by the manufacturer of the tiller.
- Never operate the tiller without good visibility or light.
- Be careful when tilling in hard ground. The tines may catch in the ground and propel the tiller forward. If this occurs, let go of the handlebars and do not restrain the machine.

MAINTENANCE AND STORAGE

- Keep machine, attachments, and accessories in safe working condition.
- Check shear pins, engine mounting bolts, and other bolts at frequent intervals for proper tightness to be sure the equipment is in safe working condition.
- Never store the machine with fuel in the fuel tank inside a building where ignition sources are present, such as hot water and space heaters, clothes dryers, and the like. Allow the engine to cool before storing in any enclosure.
- Always refer to the operator's guide instructions for important details if the tiller is to be stored for an extended period.

⚠**CAUTION:** Always disconnect spark plug wire and place wire where it cannot contact spark plug in order to prevent accidental starting when setting up, transporting, adjusting or making repairs.

WARNING

The engine exhuast from this product contains chemicals known to the State of California to cause cancer, birth defectd, or other reproductive harm.

PRODUCT SPECIFICATIONS

HORSEPOWER: 5.5 HP	
DISPLACEMENT:	13 CU. IN.
GASOLINE CAPACITY:	4 Quarts Unleaded Regular
OIL (API-SF/SG/SH): (CAPACITY: 20 oz.)	SAE 30 (Above 32°F) SAE 5W-30 (Below 32°F)
SPARK PLUG : (GAP: .030")	Champion RJ19LM

Congratulations on your purchase of a Craftsman Tiller. It has been designed, engineered and manufactured to give you the best possible dependability and performance.

Should you experience any problems you cannot easily remedy, please contact your nearest authorized Sears Service Center/Department. We have competent, well-trained technicians and the proper tools to service or repair this unit.

Please read and retain this manual. The instructions will enable you to assemble and maintain your tiller properly. Always observe the "SAFETY RULES".

Your new tiller has been assembled at the factory with exception of those parts left unassembled for shipping purposes. To ensure safe and proper operation of your tiller all parts and hardware you assemble must be tightened securely. Use the correct tools as necessary to insure proper tightness.

MAINTENANCE AGREEMENT

A Sears Maintenance Agreement is available on this product. Contact your nearest Sears store for details.

CUSTOMER RESPONSIBILITIES

- Read and observe the safety rules.
- Follow a regular schedule in maintaining, caring for and using your tiller.
- Follow the instructions under the "Customer Responsibilities" and "Storage" sections of this Owner's Manual.

WARNING: This unit is equipped with an internal combustion engine and should not be used on or near any unimproved forest-covered, brush-covered or grass covered land unless the engine's exhaust system is equipped with a spark arrester meeting applicable local or state laws (if any). If a spark arrester is used, it should be maintained in effective working order by the operator.

In the state of California the above is required by law (Section 4442 of the California Public Resources Code). Other states may have similar laws. Federal laws apply on federal lands. See your Sears Authorized Service Center for spark arrester. Refer to the Repair Parts section of this manual for part number.

ACCESSORIES

These accessories were available when the tiller was purchased. They are also available at most Sears Retail outlets and Service Centers. Most Sears Stores can order repair parts for you when you provide the model number of your tiller.

ENGINE

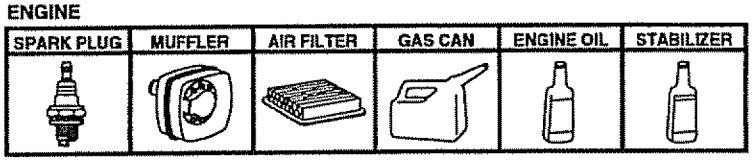

TILLER PERFORMANCE

TILLER MAINTENANCE

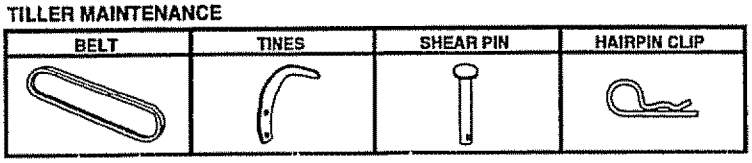

ASSEMBLY

Your new tiller has been assembled at the factory with exception of those parts left unassembled for shipping purposes. To ensure safe and proper operation of your tiller all parts and hardware you assemble must be tightened securely. Use the correct tools as necessary to insure proper tightness.

TOOLS REQUIRED FOR ASSEMBLY

A socket wrench set will make assembly easier. Standard wrench sizes are listed.

(1) Utility knife
(1) Wire cutter
(1) Tire pressure gauge
(1) Screwdriver
(1) Pair of pliers
(1) 9/16" wrench

OPERATOR'S POSITION

When right or left hand is mentioned in this manual, it means when you are in the operating position (standing behind tiller handles).

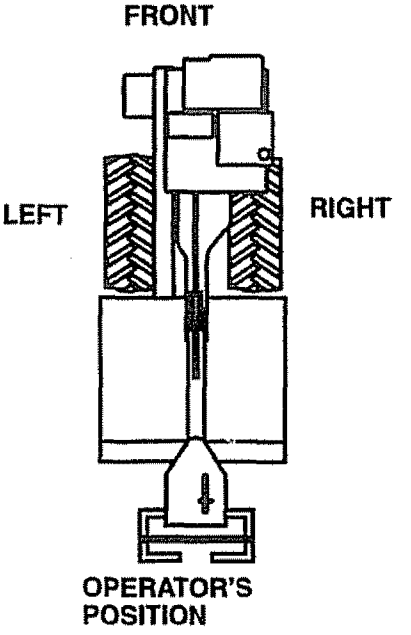

CONTENTS OF HARDWARE PACK

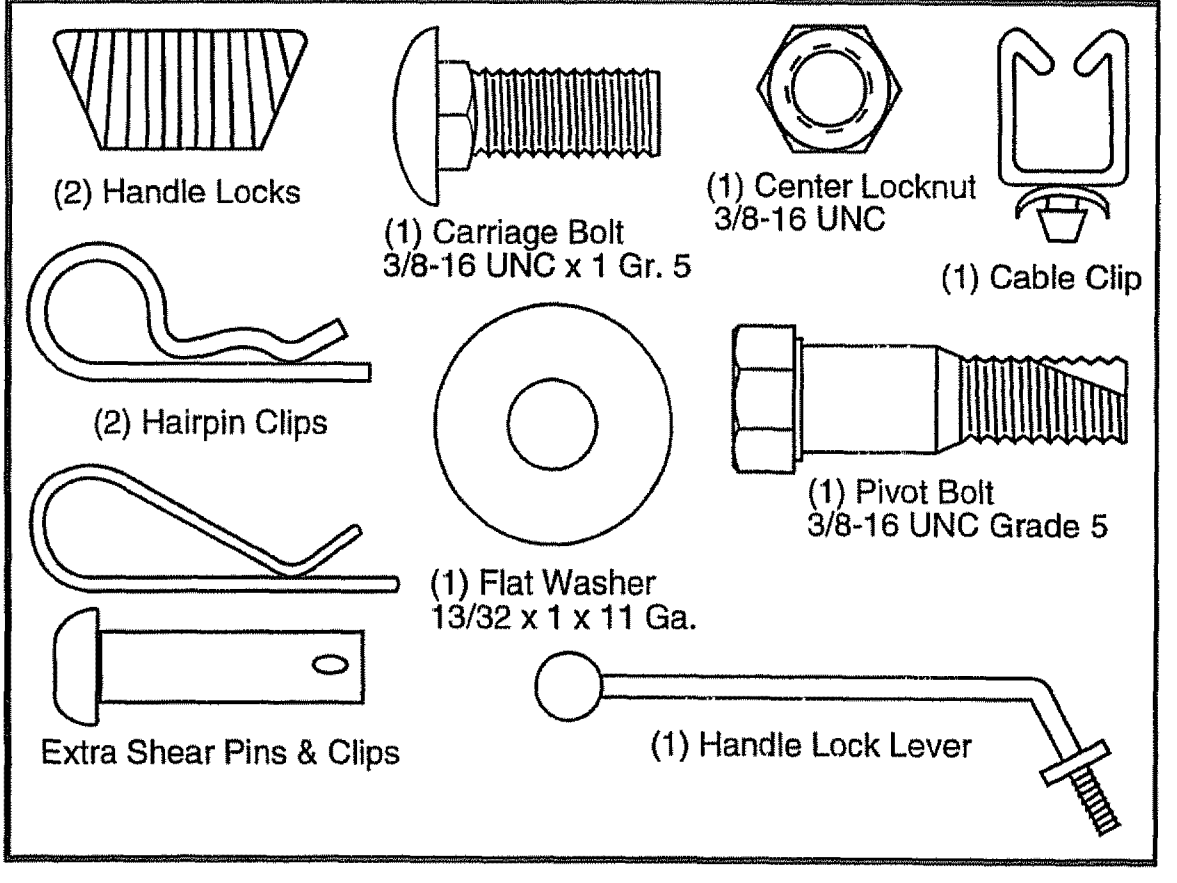

UNPACKING CARTON

⚠CAUTION: Be careful of exposed staples when handling or disposing of cartoning material.

IMPORTANT: When unpacking and assembling tiller, be careful not to stretch or kink cables.

- While holding handle assembly, cut cable ties securing handle assembly to top frame. Let handle assembly rest on tiller.
- Remove top frame of carton.
- Slowly ease handle assembly up and place on top of carton.
- Cut down right hand front and right hand rear corners of carton, lay side carton wall down.
- Remove packing material from handle assembly.
- Separate shift rod from handle assembly.

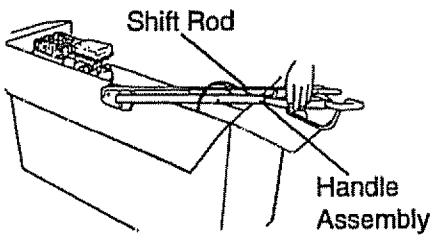

INSTALL HANDLE

- Insert one handle lock (with teeth facing outward) in gearcase notch. (Apply grease on smooth side of handle lock to aid in keeping lock in place until handle assembly is lowered into position.)

Viewed from r.h. side of tiller

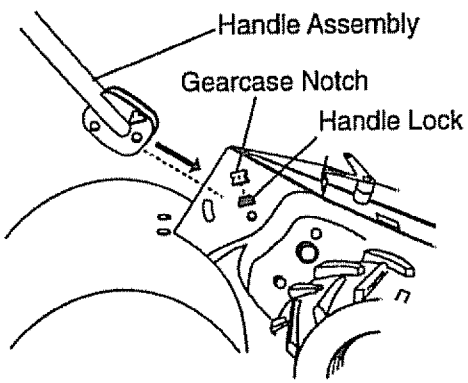

- Grasp handle assembly. Hold in "up" position. Be sure handle lock remains in gearcase notch. Slide handle assembly into position.
- Rotate handle assembly down. Insert rear carriage bolt first, with head of bolt on L.H. side of tiller and loosely assemble locknut.

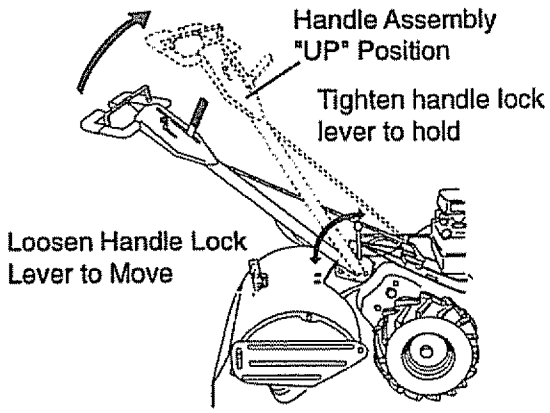

- Insert pivot bolt in front part of plate and tighten.
- Cut down remaining corners of carton and lay panels flat.
- Lower the handle assembly. Tighten nut on carriage bolt so handle moves with some resistance. This will allow for easier adjustment.
- Place flat washer on threaded end of handle lock lever.
- Insert handle lock lever through handle base and gearcase. Screw in handle lock lever just enough to hold lever in place.
- Insert second handle lock (with teeth inward) in the slot of the handle base (just inside of washer).
- Raise handle assembly to highest position and securely tighten handle lock lever by rotating clockwise. Leaving handle assembly in highest position will make it easier to connect shift rod.

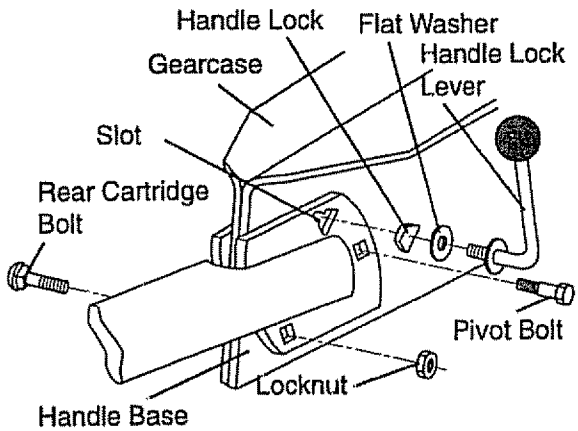

INSERT CABLE CLIP

- Insert plastic cable clip into hole on the back of handle column. Push cables into clip.

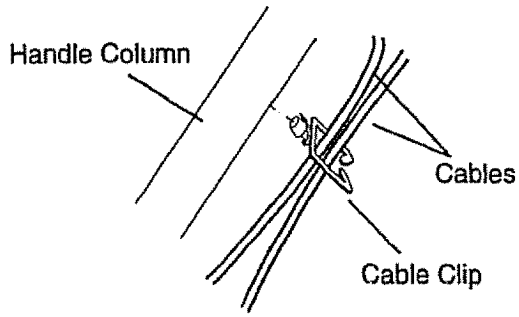

CONNECT SHIFT ROD

- Insert end of shift rod farthest from bend into hole of shift lever indicator.
- Insert hairpin clip through hole of shift rod to secure.
- Insert other end of shift rod into hole in shift lever.
- Insert second hairpin clip through hole of shift rod.

REMOVE TILLER FROM CRATE

- Adjust handle assemby to lowest position. Be sure lock lever is tightened securely.
- Make sure shift lever indicator is in "N" (neutral) position.
- Tilt tiller forward by lifting handle. Separate cardboard cover from leveling shield.
- Rotate tiller handle to the right and pull tiller out of carton.

CHECK TIRE PRESSURE

The tires on your unit were overinflated at the factory for shipping purposes. Correct and equal tire pressure is important for best tilling performance.

- Reduce tire pressure to 20 PSI.

HANDLE HEIGHT

- Handle height may be adjusted to better suit operator. (See "TO ADJUST HANDLE HEIGHT" in the Service and Adjustments section of this manual).

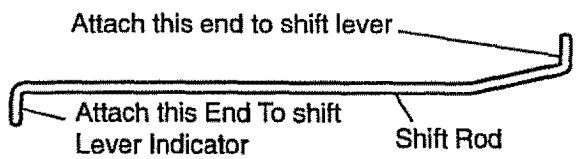

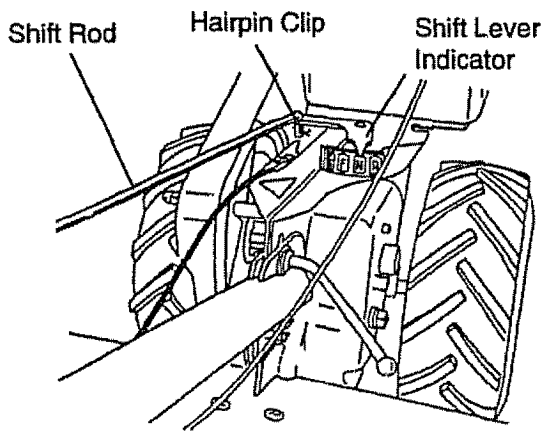

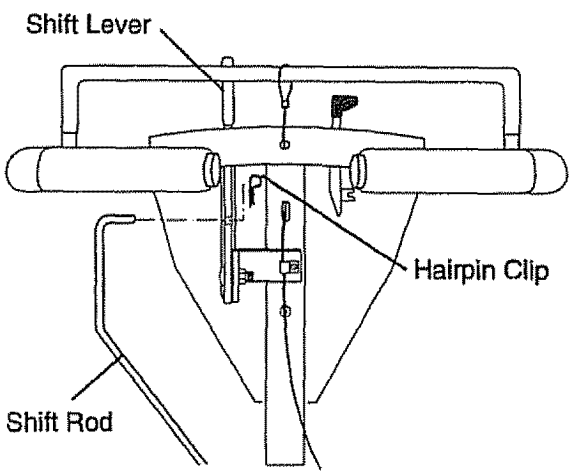

These symbols may appear on your Tiller or in literature supplied with the product. Learn and understand their meaning.

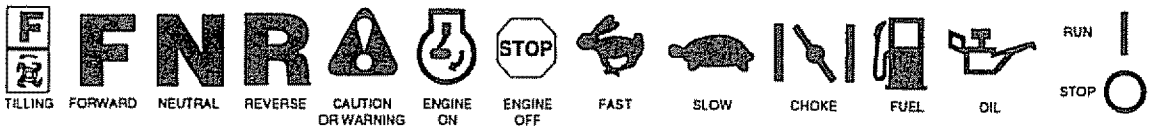

KNOW YOUR TILLER

READ THIS OWNER'S MANUAL AND SAFETY RULES BEFORE OPERATING YOUR TILLER.

Compare the illustrations with your tiller to familiarize yourself with the location of various controls and adjustments. Save this manual for future reference.

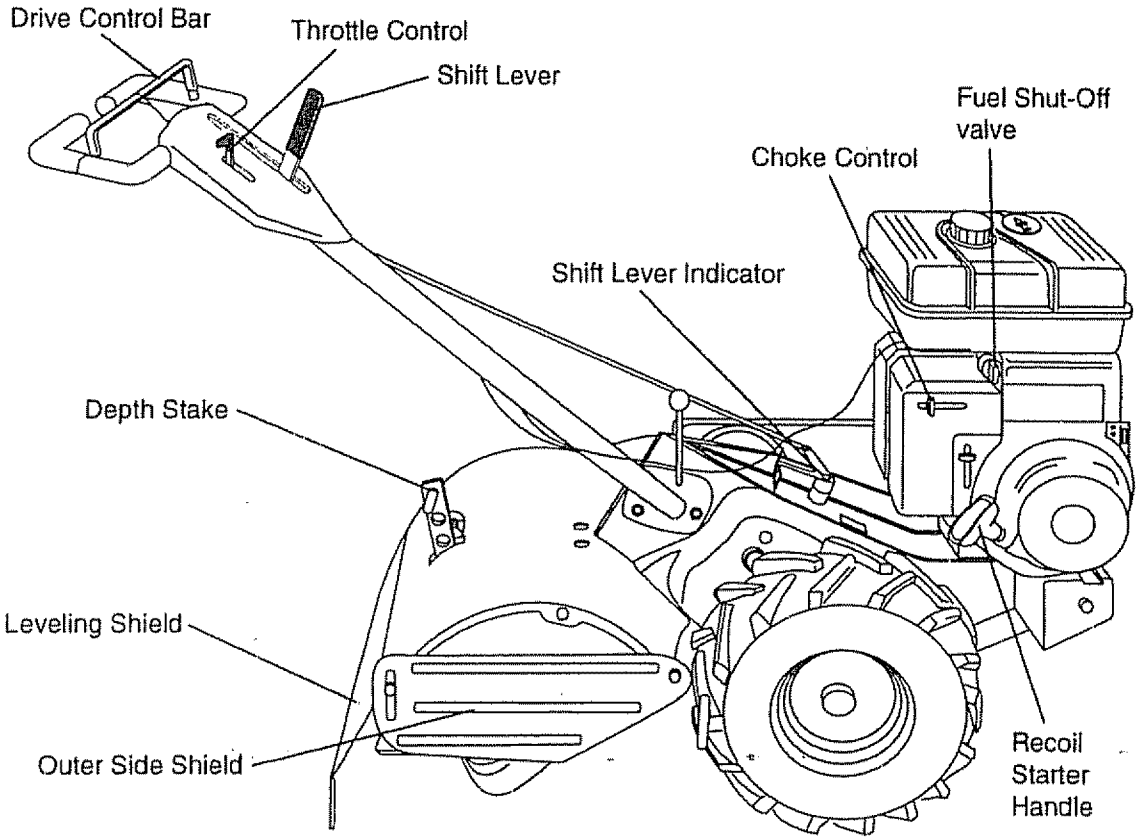

MEETS ANSI SAFETY REQUIREMENTS

Our tillers conform to the safety standards of the American National Standards Institute.

DRIVE CONTROL BAR - Used to engage tines.

DEPTH STAKE - Controls depth at which tiller will dig.

LEVELING SHIELD - Levels tilled soil.

OUTER SIDE SHIELD - Adjustable to protect small plants from being buried.

THROTTLE CONTROL - Used to control engine speed.

SHIFT LEVER - Used to shift transmission gears.

SHIFT LEVER INDICATOR - Shows which gear the transmission is in.

RECOIL STARTER HANDLE - Used to start the engine.

CHOKE CONTROL - Used when starting a cold engine.

The operation of any tiller can result in foreign objects thrown into the eyes, which can result in severe eye damage. Always wear safety glasses or eye shields before starting your tiller and while tilling. We recommend a wide vision safety mask over the spectacles or standard safety glasses.

HOW TO USE YOUR TILLER

Know how to operate all controls before adding fuel and oil or attempting to start engine.

STOPPING

TINES AND DRIVE

- Release drive control bar to stop movement.
- Move shift lever to "N" (neutral) position.

STOPPING ENGINE

- Move throttle control to "STOP" position. If equipped with stop switch, move switch to "STOP" position.
- Never use choke to stop engine.

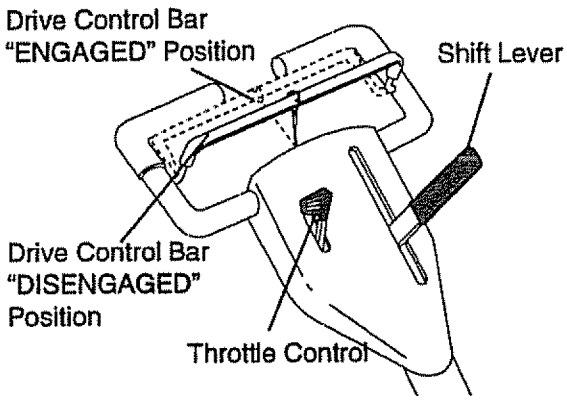

TINE OPERATION - WITH WHEEL DRIVE

- Always release drive control bar before moving shift lever into another position.
- Tine movement is achieved by moving shift lever to ( ) till position and engaging drive control bar.

FORWARD - WHEELS ONLY/TINES STOPPED

- Release drive control bar and move shift lever indicator to "F" (forward) position. Engage drive control bar and tiller will move forward.

REVERSE - WHEELS ONLY/TINES STOPPED

- DO NOT STAND DIRECTLY BEHIND TILLER.
- Release the drive control bar.
- Move throttle control to "SLOW" position.
- Move shift lever indicator to "R" (reverse) position.
- Hold drive control bar against the handle to start tiller movement.

DEPTH STAKE

The depth stake can be raised or lowered to allow you more versatile tilling and cultivating, or to more easily transport your tiller.

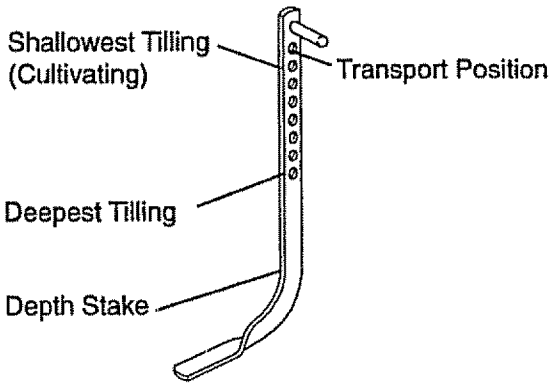

TILLING

- Release depth stake pin. Pull the depth stake up for increased tilling depth. Place depth stake pin in hole of depth stake to lock in position.
- Place shift lever indicator in till position.
- Hold the drive control bar against the handle to start tilling movement. Tines and wheels will both turn.
- Move throttle control to "FAST" position for deep tilling. To cultivate, throttle control can be set at any desired speed, depending on how fast or slow you wish to cultivate.

IMPORTANT: Always release drive control bar before moving shift lever into another position.

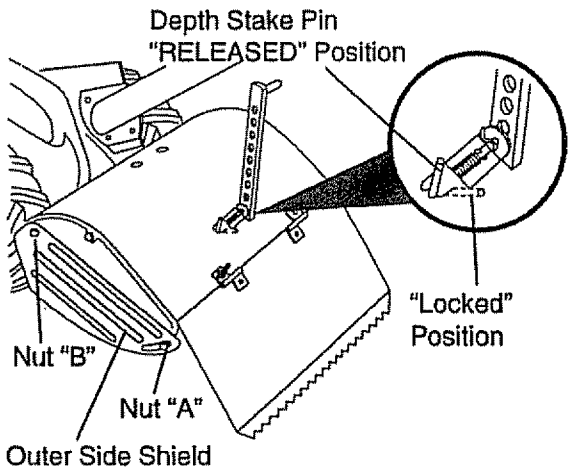

TURNING

- Release the drive control bar.
- Move throttle control to "SLOW" position.
- Place shift lever indicator in "F" (forward) position. Tines will not turn.
- Lift handle to raise tines out of ground.
- Swing the handle in the opposite direction you wish to turn, being careful to keep feet and legs away from tines.
- When you have completed your turn-around, release the drive control bar and lower handle. Place shift lever in till position and move throttle control to desired speed. To begin tilling, hold drive control bar against the handle.

OUTER SIDE SHIELDS

The back edges of the outer side shields are slotted so that the shields can be raised for deep tilling and lowered for shallow tilling to protect small plants from being buried. Loosen nut "A" in slot and nut "B". Move shield to desired position (both sides). Retighten nuts.

TO TRANSPORT

⚠**CAUTION:** Before lifting or transporting, allow tiller engine and muffler to cool. Disconnect spark plug wire. Drain gasoline from fuel tank.

AROUND THE YARD

- Release the depth stake pin. Move the depth stake down to the top hole for transporting the tiller. Place depth stake pin in hole of depth stake to lock in position. This prevents tines from scuffing the ground.
- Place shift lever indicator in "F" (forward) position for transporting.
- Hold the drive control bar against the handle to start tiller movement. Tines will not turn.
- Move throttle control to desired speed.

AROUND TOWN

- Disconnect spark plug wire.
- Drain fuel tank.
- Transport in upright position to prevent oil leakage.

BEFORE STARTING ENGINE

IMPORTANT: Be very careful not to allow dirt to enter the engine when checking or adding oil or fuel. Use clean oil and fuel and store in approved, clean, covered containers. use clean fill funnels.

CHECK ENGINE OIL LEVEL

- The engine in your unit has been shipped, from the factory, already filled with SAE 30 summer weight oil.
- With engine level, clean area around oil filler plug and remove plug.
- Engine oil should be to point of overflowing when engine is level. For approximate capacity see "PRODUCT SPECIFICATIONS" on page 4 of this manual. All oil must meet A.P.I. Service Classification SF, SG or SH.
- For cold weather operation you should change oil for easier starting (See oil viscosity chart in the Customer Responsibilities section of this manual).
- To change engine oil, see the Customer Responsibilities section in this manual.

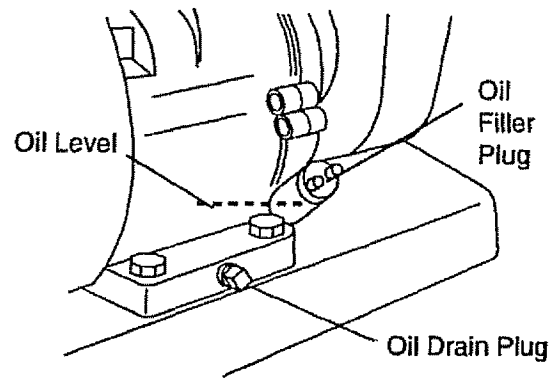

ADD GASOLINE

- Fill fuel tank. Use fresh, clean, regular unleaded gasoline. (Use of leaded gasoline will increase carbon and lead oxide deposits and reduce valve life.

IMPORTANT: When operating in temperatures below 32°F (0°C), use fresh, clean, winter grade gasoline to help insure good cold weather starting.

WARNING: Experience indicates that alcohol blended fuels (called gasohol or using ethanol or methanol) can attract moisture which leads to separation and formation of acids during storage. Acidic gas can damage the fuel system of an engine while in storage. **To avoid engine problems, the fuel system should be emptied before storage of 30 days or longer.** Drain the gas tank, start the engine and let it run until the fuel lines and carburetor are empty. **Use fresh fuel next season.** See Storage section of this manual for additional information. Never use engine or carburetor cleaner products in the fuel tank or permanent damage may occur.

⚠**CAUTION:** Fill to within 1/2 inch of top of fuel tank to prevent spills and to allow for fuel expansion. If gasoline is accidentally spilled, move machine away from area of spill. Avoid creating any source of ignition until gasoline vapors have disappeared.
Do not overfill. Wipe off any spilled oil or fuel. Do not store, spill or use gasoline near an open flame.

TO START ENGINE

⚠**CAUTION:** Keep tine control in "OFF" position when starting engine.
When starting engine for the first time or if engine has run out of fuel, it will take extra pulls of the recoil starter to move fuel from the tank to the engine.

- Make sure spark plug wire is properly connected and access cover is completely closed to create proper seal.
- Move shift lever indicator to "N" (neutral) position.
- Place throttle control in "FAST" position.
- Turn fuel shut-off valve to "ON" position.
- Push stop switch to "ON" position.
- Move choke control to full "CHOKE" position. Grasp recoil starter handle with one hand and grasp tiller handle with other hand. Pull rope out slowly until engine reaches start of compression cycle (rope will pull slightly harder at this point).
- Pull recoil starter handle quickly. Do not let starter handle snap back against starter. Repeat if necessary.

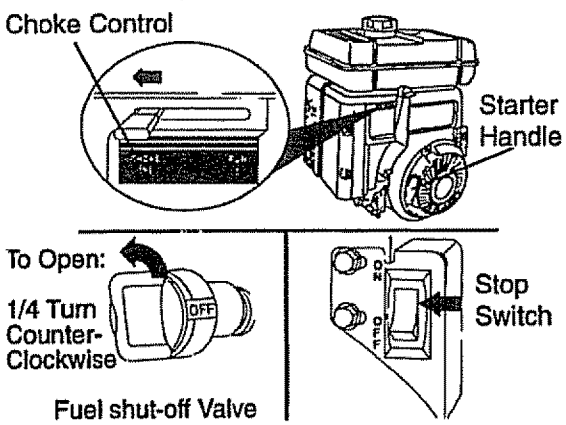

- If engine fires but does not start, move choke control to half choke position. Pull recoil starter handle until engine starts.
- When engine starts, slowly move choke control to "RUN" position as engine warms up.

NOTE: A warm engine requires less choking to start.

- Move throttle control to desired running position.
- Allow engine to warm up for a few minutes before engaging tines.

NOTE: If at a high altitude (3000 feet) or in cold temperatures (below 32°F), the carburetor fuel mixture may need to be adjusted for best engine performance. See "TO ADJUST CARBURETOR" in the Service and Adjustments section of this manual.
NOTE: If engine does not start, see troubleshooting points.

TILLING HINTS

⚠**CAUTION:** Until you are accustomed to handling your tiller, start actual field use with throttle in slow position (mid-way between "FAST" and "IDLE").

- Tilling is digging into, turning over, and breaking up packed soil before planting. Loose, unpacked soil helps root growth. Best tilling depth is 4" to 6". A tiller will also clear the soil of unwanted vegetation. The decomposition of this vegetable matter enriches the soil. Depending on the climate (rainfall and wind), it may be advisable to till the soil at the end of the growing season to further condition the soil.
- Soil conditions are important for proper tilling. Tines will not readily penetrate dry, hard soil which may contribute to excessive bounce and difficult handling of your tiller. Hard soil should be moistened before tilling; however, extremely wet soil will "ball-up" or clump during tilling. Wait until the soil is less wet in order to achieve the best results. When tilling in the fall, remove vines and long grass to prevent them from wrapping around the tine shaft and slowing your tilling operation.
- You will find tilling much easier if you leave a row untilled between passes. Then go back between tilled rows. There are two reasons for doing this. First, wide turns are much easier to negotiate than about-faces. Second, the tiller won't be pulling itself, and you, toward the row next to it.
- Do not lean on handle. This takes weight off the wheels and reduces traction.

To get through a really tough section of sod or hard ground, apply upward pressure on handle or lower the depth stake.

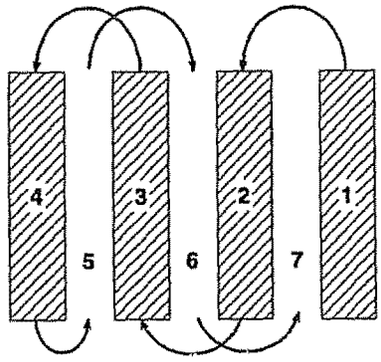

CULTIVATING

Cultivating is destroying the weeds between rows to prevent them from robbing nourishment and moisture from the plants. At the same time, breaking up the upper layer of soil crust will help retain moisture in the soil. Best digging depth is 1" to 3" (2.5-7.5 cm). Lower the outer side shields to protect small plants from being buried.

- Cultivate up and down the rows at a speed which will allow tines to uproot weeds and leave the ground in rough condition, promoting no further growth of weeds and grass.

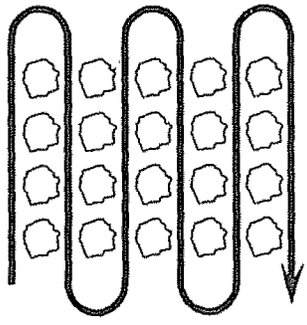

TINE SHEAR PINS

The tine assemblies on your tiller are secured to the tine shaft with shear pins (See "TINE REPLACEMENT" in the Service and Adjustments section of this manual).

If the tiller is unusually overloaded or jammed, the shear pins are designed to break before internal damage occurs to the transmission.

- If shear pin(s) break, replace only with those shown in the Repair Parts section of this manual.

MAINTENANCE SCHEDULE FILL IN DATES AS YOU COMPLETE REGULAR SERVICE	BEFORE EACH USE	EVERY 5 HOURS	EVERY 25 HOURS	EVERY 50 HOURS	SERVICE DATES									
Check Engine Oil Level	✔	✔												
Change Engine Oil				✔[1,2]										
Oil Pivot Points		✔												
Inspect Spark Arrester / Muffler				✔										
Inspect Air Screen	✔													
Clean or Replace Air Cleaner Cartridge				✔[2]										
Clean Engine Cylinder Fins				✔										
Replace Spark Plug				✔										

1 - Change more often when operating under a heavy load or in high ambient temperatures.
2 - Service more often when operating in dirty or dusty conditions.

GENERAL RECOMMENDATIONS

The warranty on this tiller does not cover items that have been subjected to operator abuse or negligence. To receive full value from the warranty, the operator must maintain tiller as instructed in this manual. Some adjustments will need to be made periodically to properly maintain your tiller. All adjustments in the Service and Adjustments section of this manual should be checked at least once each season.

- Once a year you should replace the spark plug, clean or replace air filter, and check tines and belts for wear. A new spark plug and clean air filter assure proper air-fuel mixture and help your engine run better and last longer.

BEFORE EACH USE

- Check engine oil level.
- Check tine operation.
- Check for loose fasteners.

LUBRICATION

Keep unit well lubricated (See "LUBRICATION CHART").

LUBRICATION CHART

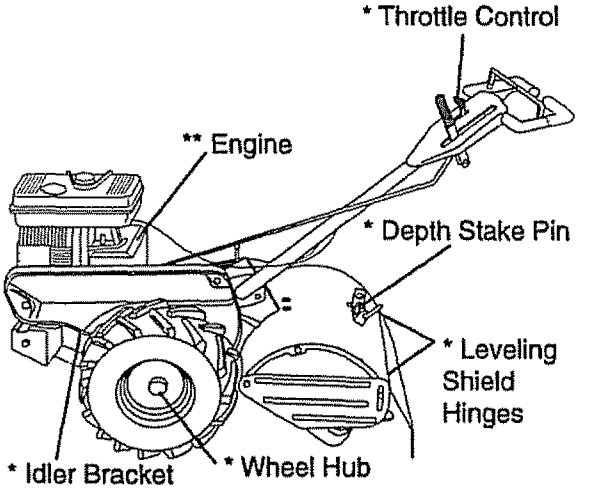

*** SAE 30 OR 10W-30 MOTOR OIL**
**** REFER TO CUSTOMER RESPONSIBILITIES "ENGINE" SECTION**

Disconnect spark plug wire before performing any maintenance (except carburetor adjustment) to prevent accidental starting of engine.

Prevent fires! Keep the engine free of grass, leaves, spilled oil, or fuel. Remove fuel from tank before tipping unit for maintenance. Clean muffler area of all grass, dirt, and debris.

Do not touch hot muffler or cylinder fins as contact may cause burns.

ENGINE

LUBRICATION

Use only high quality detergent oil rated with API service classification SF, SG or SH. Select the oil's SAE viscosity grade according to your expected temperature.

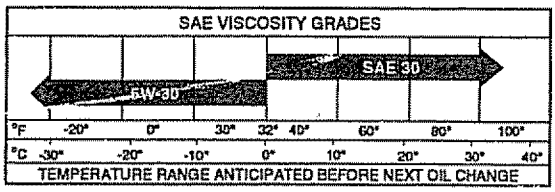

NOTE: Although multi-viscosity oils (5W-30, 10W-30, etc.) improve starting in cold weather, these multi-viscosity oils will result in increased oil consumption when used above 32°F (0°C). Check your engine oil level more frequently to avoid possible engine damage from running low on oil.

Change the oil after every 50 hours of operation or at least once a year if the tiller is not used for 50 hours in one year. Check the crankcase oil level before starting the engine and after each five (5) hours of continuous use. Add SAE 30 motor oil or equivalent. Tighten oil filler plug securely each time you check the oil level.

TO CHANGE ENGINE OIL

Determine temperature range expected before oil change. All oil must meet API service classification SF, SG or SH.

- Be sure tiller is on level surface.
- Oil will drain more freely when warm.
- Use a funnel to prevent oil spill on tiller, and catch oil in a suitable container.
- Remove drain plug.
- Tip tiller forward to drain oil.
- After oil has drained completely, replace oil drain plug and tighten securely.
- Remove oil filler plug. Be careful not to allow dirt to enter the engine.
- Refill engine with oil. See "CHECK ENGINE OIL LEVEL" in the Operation section of this manual.

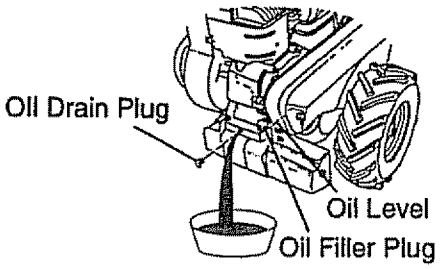

AIR FILTER

Your engine will not run properly using a dirty air filter. Clean the foam pre-cleaner after every 50 hours of operation or every season. Service paper cartridge every 100 hours of operation or every season, whichever occurs first.

Service air cleaner more often under dusty conditions.

- Loosen air cleaner cover screws. Remove cover and air cleaner assembly from base.
- Remove air cleaner asssembly from inside cover and disassemble.

TO SERVICE PRE-CLEANER

- Wash it in liquid detergent and water.
- Squeeze it dry in a clean cloth.
- Saturate it in engine oil. Wrap it in clean, absorbent cloth and squeeze to remove excess oil.

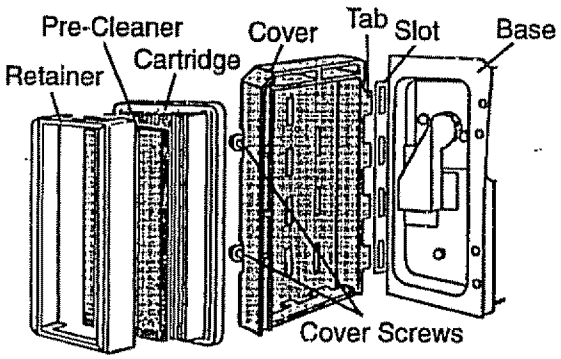

TO SERVICE CARTRIDGE

- Gently tap the flat side of the paper cartridge to dislodge dirt. Do not wash the paper cartridge or use pressurized air, as this will damage the cartridge. Replace a dirty, bent, or damaged cartridge.
- Re-assemble retainer on pre-cleaner and cartridge (screen side of pre-cleaner toward cartridge pleats). Place assembly into cover.

- Insert tabs on cover into slots in base and tighten cover screws securely.

⚠**CAUTION:** Petroleum solvents, such as kerosene, are not to be used to clean cartridge. They may cause deterioration of the cartridge. Do not oil cartridge. Do not use pressurized air to clean or dry cartridge.

COOLING SYSTEM

Your engine is air cooled. For proper engine performance and long life keep your engine clean.

- Clean air screen frequently using a stiff-bristled brush.
- Remove blower housing and clean as necessary.
- Keep cylinder fins free of dirt and chaff.

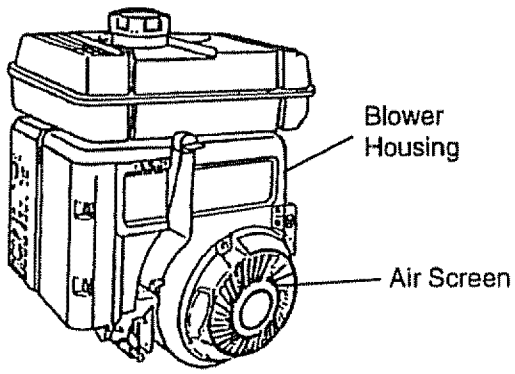

MUFFLER

Do not operate tiller without muffler. Do not tamper with exhaust system. Damaged mufflers or spark arresters could create a fire hazard. Inspect periodically and replace if necessary. If your engine is equipped with a spark arrester screen assembly, remove every 50 hours for cleaning and inspection. Replace if damaged.

SPARK PLUG

Replace spark plugs at the beginning of each tilling season or after every 50 hours of use, whichever comes first. Spark plug type and gap setting is shown in "PRODUCT SPECIFICATIONS" on page 4 of this manual.

TRANSMISSION

Your transmission is sealed and will only require lubrication if serviced.

CLEANING

- Clean engine, wheels, finish, etc. of all foreign matter.
- Keep finished surfaces and wheels free of all gasoline, oil, etc.
- Protect painted surfaces with automotive type wax.

We do not recommend using a garden hose to clean your unit unless the muffler, air filter and carburetor are covered to keep water out. Water in engine can result in a shortened engine life.

SERVICE AND ADJUSTMENTS

⚠**CAUTION:** Disconnect spark plug wire from spark plug and place wire where it cannot come into contact with plug.

TILLER

TO ADJUST HANDLE HEIGHT

Select handle height best suited for your tilling conditions. Handle height will be different when tiller digs into soil.

- First loosen handle lock lever.
- Handle can be positioned at different settings between "HIGH" and "LOW" positions.
- Retighten handle lock lever securely after adjusting.

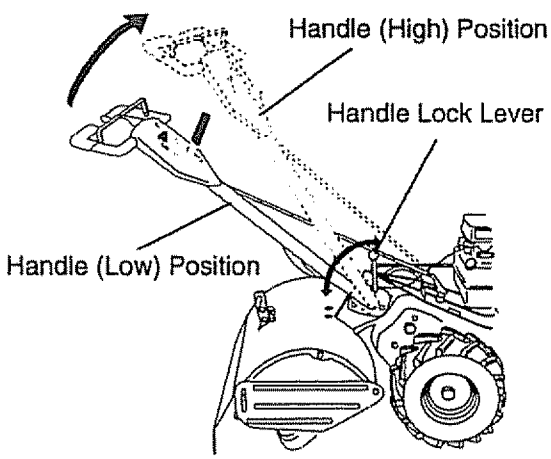

TIRE CARE

CAUTION: When mounting tires, unless beads are seated, overinflation can cause an explosion.

- Maintain 20 pounds of tire pressure. If tire pressures are not equal, tiller will pull to one side.
- Keep tires free of gasoline or oil which can damage rubber.

TO REMOVE WHEEL

- Place blocks under transmission to keep tiller from tipping.
- Remove outer side shield by removing nuts "A" and "B".
- Remove inner side shield by removing nuts "C" and "D".
- Remove hairpin clip and clevis pin from wheel.
- Remove wheel and tire.• Repair tire and reassemble.

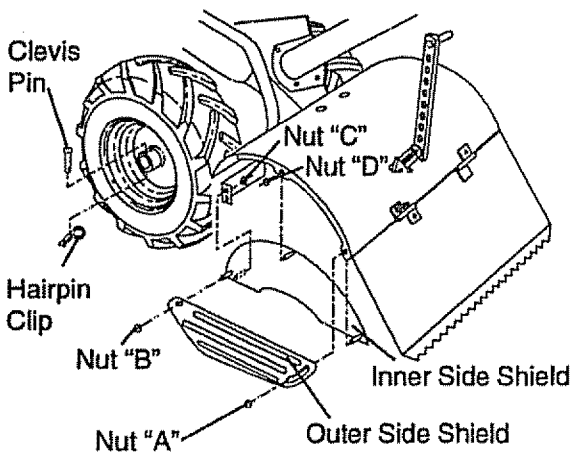

TO REMOVE BELT GUARD

NOTE: For ease of removal, remove hairpin clip and clevis pin from left wheel. Pull wheel out from tiller about 1 inch.

- Remove two (2) cap nuts and washers from side of belt guard.
- Remove hex nut and washer from bottom of belt guard (located behind wheel).
- Pull belt guard out and away from unit.
- Replace belt guard by reversing above procedure.

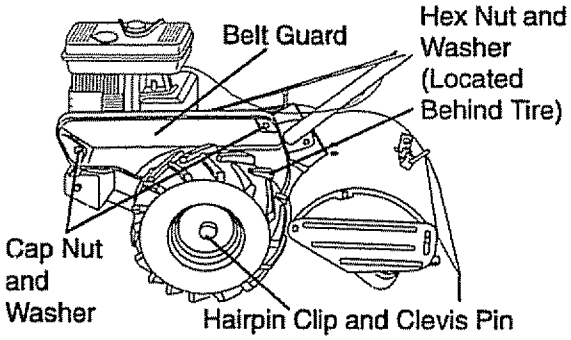

TO REPLACE GROUND DRIVE BELT

- Remove belt guard as described in "TO REMOVE BELT GUARD".
- Loosen belt guides "A" and "B" and also remove stud "C".
- Remove old belt by slipping off engine pulley first then remove from the pulley.
- Place new belt in groove of transmission pulley and into engine pulley. BELT MUST BE IN GROOVE ON TOP OF IDLER PULLEY. NOTE POSITION OF BELT TO GUIDES.
- Tighten belt guides "A" and "B" and stud "C".
- Check belt adjustment as described below.
- Replace belt guard.
- Reposition wheel and replace clevis pin and hairpin clip.

GROUND DRIVE BELT ADJUSTMENT

For proper belt tension, the extension spring should have about 5/8 inch stretch when drive control bar is in "ENGAGED" position. This tension can be attained as follows:

- Loosen cable clip screw securing the drive control cable.
- Slide cable forward for less tension and rearward for more tension until about 5/8 inch stretch is obtained while the drive control bar is engaged.
- Tighten cable clip screw securely.

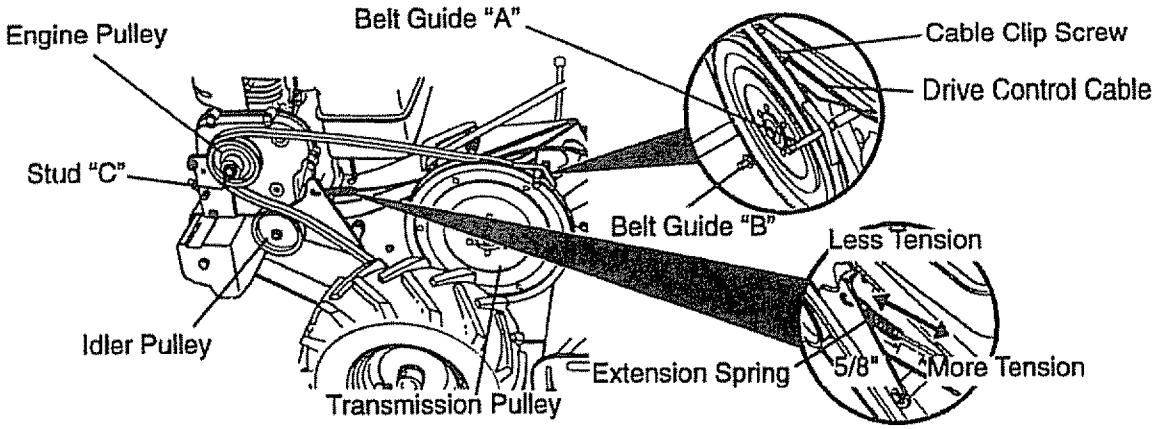

TINE REPLACEMENT

⚠CAUTION: Tines are sharp. Wear gloves or other protection when handling tines.

A badly worn tine causes your tiller to work harder and dig more shallow. Most important, worn tines cannot chop and shred organic matter as effectively nor bury it as deeply as good tines. A tine this worn needs to be replaced.

- To maintain the superb tilling performance of this machine the tines should be checked for sharpness, wear, and bending, particularly the tines which are next to the transmission. If the gap between the tines exceeds 3-1/2 inches they should be replaced or straightened as necessary.
- New tines should be assembled. Sharpened tine edges will rotate rearward from above.

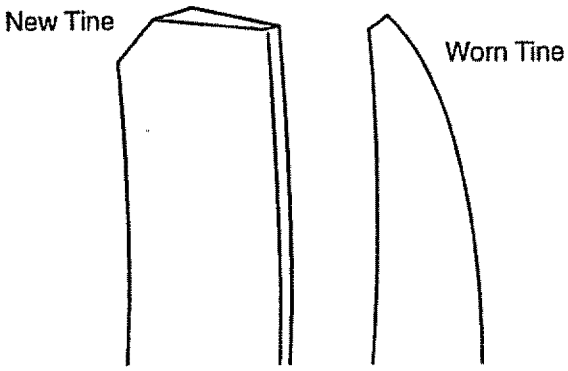

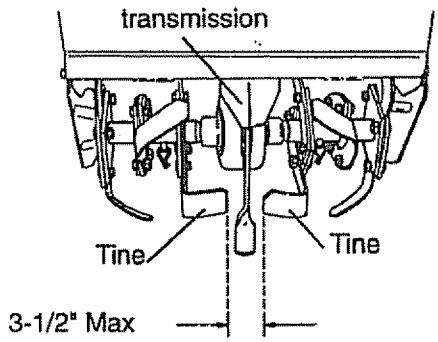

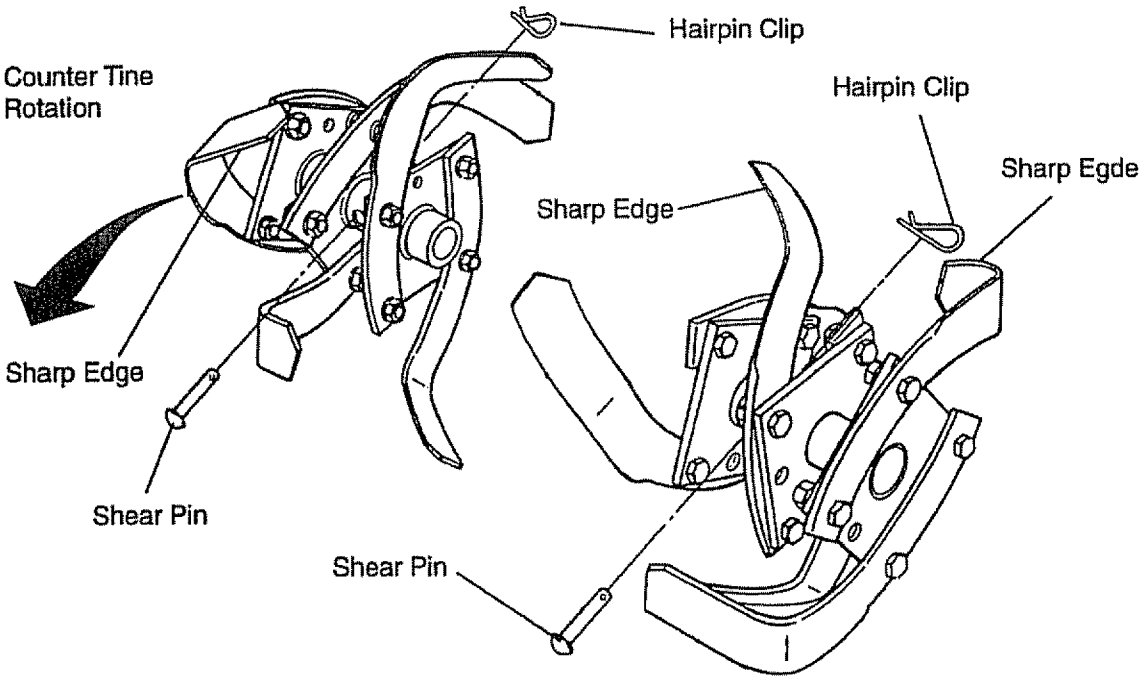

ENGINE

Maintenance, repair, or replaceent of the emission control devices and systems, which are being done at the customers expense, may be performed by any non-road engine repair establishment or individual. Warranty repairs must be performed by an authorized engine manufacturer's sercie outlet.

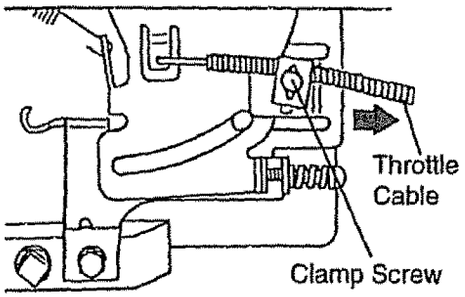

TO ADJUST THROTTLE CONTROL CABLE

- *Loosen cable clamp screw to allow* cable to move.
- Move throttle control lever on upper handle to "FAST" position.
- Pull throttle cable out to end of travel
- Hold cable in this position and tighten clamp screw securely.

TO ADJUST CARBURETOR

The carburetor has a high speed jet and has been preset at the factory and adjustment should not be necessary. However, minor adjustments may be required to compensate for differences in fuel, temperature, altitude or load. If the carburetor does need adjustment, proceed as follows.

IDLE RPM ADJUSTMENT

- To adjust idle RPM, rotate throttle linkage counterclockwise and hold against stop while adjusting idle speed adjusting screw to obtain 1750 RPM. Release throttle linkage.

ACCELERATION TEST

- Move throttle control lever from "SLOW" to "FAST" position. If engine hesitates or dies, turn needle valve out (counterclockwise) 1/8 turn. Repeat test and continue to adjust, if necessary, until engine accelerates smoothly.

High speed stop is factory adjusted. Do not adjust or damage may result.

IMPORTANT: Never tamper with the engine governor, which is factory set for proper engine speed. overspeeding the engine above the factory high speed setting can be dangerous. If you think the engine-governed high speed needs adjusting, contact your nearest authorized service center/department, which has the proper equipment and experience to make any necessary adjustments.

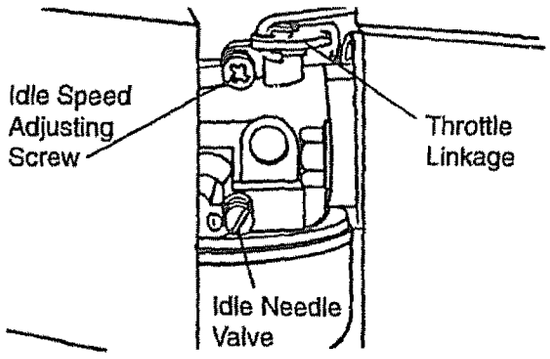

STORAGE

Immediately prepare your tiller for storage at the end of the season or if the unit will not be used for 30 days or more.

⚠**CAUTION:** Never store the tiller with gasoline in the tank inside a building where fumes may reach an open flame or spark. Allow the engine to cool before storing in any enclosure.

TILLER

- Clean entire tiller (See "CLEANING" in the Customer Responsibilities section of this manual).
- Inspect and replace belts, if necessary (See belt replacement instructions in the Service and Adjustments section of this manual).
- Lubricate as shown in the Customer Responsibilities section of this manual.
- Be sure that all nuts, bolts and screws are securely fastened. Inspect moving parts for damage, breakage and wear. Replace if necessary.
- Touch up all rusted or chipped paint surfaces; sand lightly before painting.

ENGINE

FUEL SYSTEM

IMPORTANT: It is important to prevent gum deposits from forming in essential fuel system parts such as the carburetor, fuel filter, fuel hose, or tank during storage. also, experience indicates that alcohol blended fuels (called gasohol or using ethanol or methanol) can attract moisture which leads to separation and formation of acids during storage. Acidic gas can damage the fuel system of an engine while in storage.

- Drain the fuel tank.
- Start the engine and let it run until the fuel lines and carburetor are empty.
- Never use engine or carburetor cleaner products in the fuel tank or permanent damage may occur.
- Use fresh fuel next season.

NOTE: Fuel stabilizer is an acceptable alternative in minimizing the formation of fuel gum deposits during storage. Add stabilizer to gasoline in fuel tank or storage container. Always follow the mix ratio found on stabilizer container. Run engine at least 10 minutes after adding stabilizer to allow the stabilizer to reach the carburetor. Do not drain the gas tank and carburetor if using fuel stabilizer.

ENGINE OIL

Drain oil (with engine warm) and replace with clean oil. (See "ENGINE" in the Customer Responsibilities section of this manual).

CYLINDER

- Remove spark plug.
- Pour 1 ounce (29 ml) of oil through spark plug hole into cylinder.
- Pull starter handle slowly several times to distribute oil.
- Replace with new spark plug.

OTHER

- Do not store gasoline from one season to another.
- Replace your gasoline can if your can starts to rust. Rust and/or dirt in your gasoline will cause problems.
- If possible, store your unit indoors and cover it to give protection from dust and dirt.
- Cover your unit with a suitable protective cover that does not retain moisture. Do not use plastic. Plastic cannot breathe which allows condensation to form and will cause your unit to rust.

IMPORTANT: Never cover tiller while engine and exhaust areas are still warm.

TROUBLE SHOOTING

PROBLEM	CAUSE	CORRECTION
Will not start	1. Out of fuel. 2. Engine not "CHOKED" properly. 3. Engine flooded. 4. Dirty air cleaner. 5. Water in fuel. 6. Clogged fuel tank. 7. Loose spark plug wire. 8. Bad spark plug or improper gap. 9. Carburetor out of adjustment.	1. Fill fuel tank. 2. See "TO START ENGINE" in.the Operation section. 3. Wait several minutes before attempting to start. 4. Clean or replace air cleaner car tridge. 5. Drain fuel tank and carburetor, and refill tank with fresh gasoline. 6. Remove fuel tank and clean. 7. Make sure spark plug wire is seat ed properly on plug. 8. Replace spark plug or adjust gap. 9. Make necessary adjustments.
Hard to start	1. Throttle control not set properly. 2. Dirty air cleaner. 3. Bad spark plug or improper gap. 4. Stale or dirty fuel. 5. Loose spark plug wire. 6. Carburetor out of . adjustment.	1. Place throttle control in "FAST" position. 2. Clean or replace air cleaner car tridge. 3. Replace spark plug or adjust gap. 4. Drain fuel tank and refill with fresh gasoline. 5. Make sure spark plug wire is seat ed properly on plug. 6. Make necessary adjustments.
Loss of power	1. Engine is overloaded. 2. Dirty air cleaner. 3. Low oil level/dirty oil. 4. Faulty spark plug. 5. Oil in fuel. 6. Stale or dirty fuel. 7. Water in fuel. 8. Clogged fuel tank. 9. Spark plug wire loose. wire. 10. Dirty engine air screen. 11. Dirty/clogged muffler. 12. Carburetor out of adjustment. 13. Poor compression.	1. Set depth stake and wheels for shallower tilling. 2. Clean or replace air cleaner car tridge. 3. Check oil level/change oil. 4. Clean and regap or change spark plug. 5. Drain and clean fuel tank and refill, and clean carburetor. 6. Drain fuel tank and refill with fresh gasoline. 7. Drain fuel tank and carburetor, and refill tank with fresh gasoline. 8. Remove fuel tank and clean. 9. Connect and tighten spark plug 10. Clean engine air screen. 11. Clean/replace muffler. 12. Make necessary adjustments. 13. Contact an authorized Sears Service Center/Department.

PROBLEM	CAUSE	CORRECTION
Engine overheats	1. Low oil level/dirty oil. 2. Dirty engine air screen. 3. Dirty engine. 4. Partially plugged muffler. 5. Improper carburetor adjustment.	1. Check oil level/change oil. 2. Clean engine air screen. 3. Clean cylinder fins, air screen, muf fler area. 4. Remove and clean muffler. 5. Adjust carburetor to richer posi tion.
Excessive bounce/ difficult handling	1. Ground too dry and hard. 2. Wheels and depth stake incorrectly adjusted.	1. Moisten ground or wait for more favorable soil conditions. 2. Adjust wheels and depth stake.
Soil balls up or clumps	1. Ground too wet.	1. Wait for more favorable soil condi tions.
Engine runs but tiller won't move	1. Tine control is not engaged. 2. V-belt not correctly adjusted. 3. V-belt is off pulley(s).	1. Engage tine control. 2. Inspect/adjust V-belt. 3. Inspect V-belt.
Engine runs but labors when tilling	1. Tilling too deep. 2. Throttle control not properly adjusted. 3. Carburetor out of adjustment.	1. Set depth stake for shallower till ing. 2. Check throttle control setting. 3. Make necessary adjustments.

TILLER - - MODEL NUMBER 917.293300

HANDLES

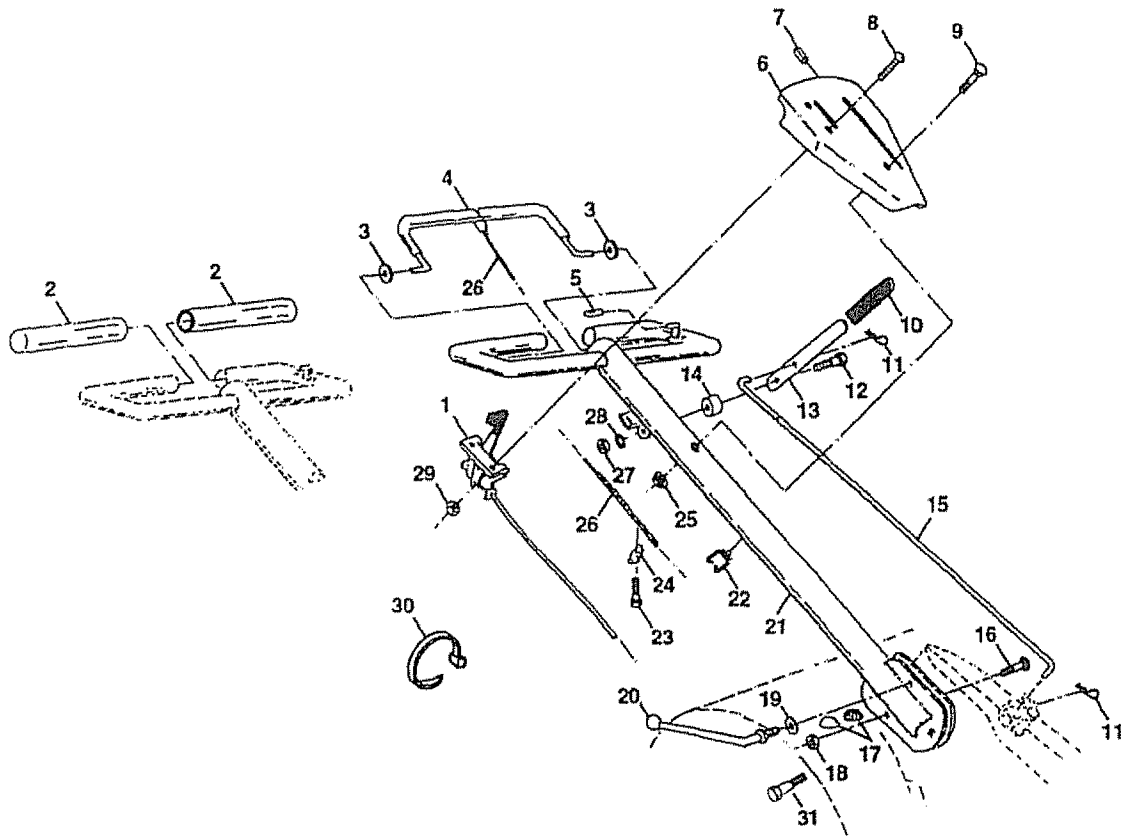

KEY NO.	PART NO.	DESCRIPTION
1	148583	Throttle, Control
2	141406	Grip, Handle
3	110673X	Grommet, Handle
4	127254X	Bar, Drive Control Assembly
5	6712J	Cap, Vinyl
6	137119	Panel, Control
7	110641X	Bushing, Split
8	71191008	*Screw, Pan Head #10-24
9	72010520	*Bolt, 5/16-18 x 2-1/2
10	110646X	Handle, Grip
11	STD624003	*Clip, Hairpin
12	81328	Bolt, Shoulder
13	110741X	Handle, Shift
14	109313X	Grommet, Rubber
15	110702X	Rod, Shift
16	STD533710	*Bolt, Carriage 3/8-16 x 1 Gr. 5
17	109229X	Lock, Handle
18	STD541437	*Nut, Centerlock 3/8-16
19	19131611	Washer 13/32 x 1 x 11 Ga.
20	109228X	Lever, Lock, Handle
21	150258	Handle, Assemble
22	121145X	Clip, Plastic, Cable
23	86777	Screw, Hex, Washer Hd, Slotted #10-24 x 1/2
24	9484R	Clip
25	73970500	Locknut, Hex, Flange
26	110675X	Clutch, Cable
27	STD541025	*Nut, Hex 1/4-20
28	STD551125	*Washer, Lock 1/4
29	STD541462	*Nut, Keps #10-24
30	104164X	Tie, Cable
31	150696	Bolt, Pivot

* STANDARD HARDWARE - - PURCHASE LOCALLY
NOTE: All component dimensions given in U.S. inches.
1 inch = 25.4 mm

TILLER - - MODEL NUMBER 917.293300

MAINFRAME, LEFT SIDE

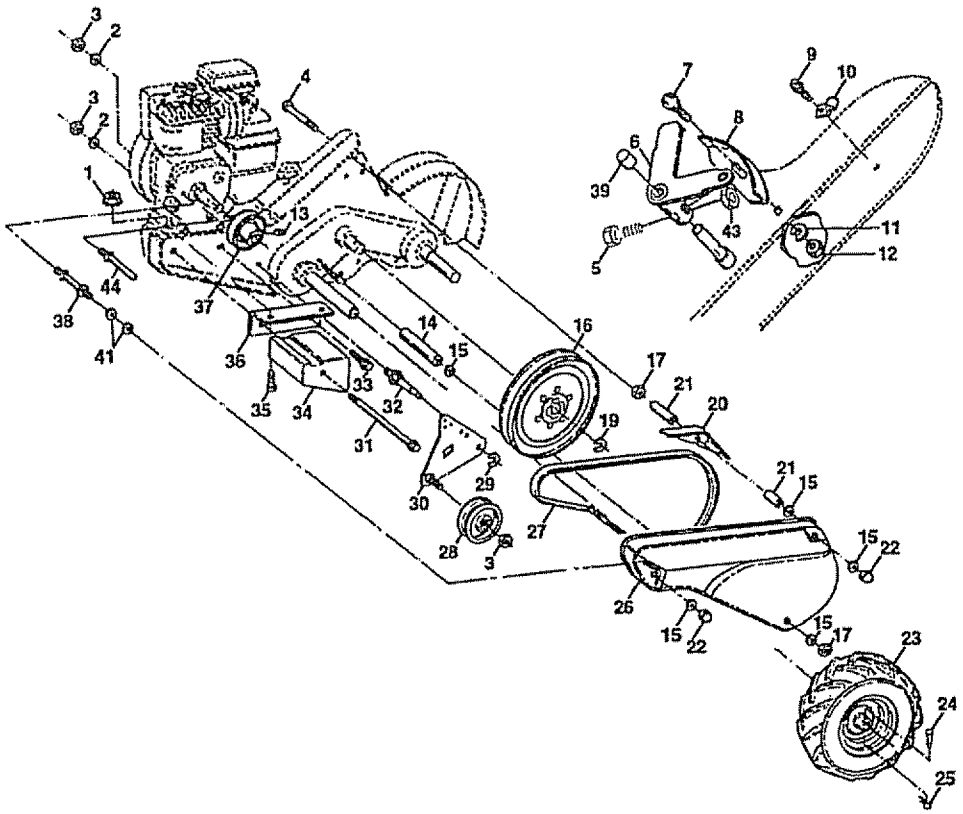

KEY NO.	PART NO.	DESCRIPTION
1	STD541431	Nut, Keps 5/16-18
2	STD551137	*Washer, Lock 3/8
3	STD541037	*Nut, Hex 3/8-16
4	74930568	Bolt, Hex 5/16-18 x 4-1/4
5	154734	Screw Shift Lever
6	110111X	Lever, Shift
7	STD532505	*Bolt, Carriage 1/4-20 x 1/2 Gr. 5
8	8700J	Plate, Shift Indicator
9	86777	Screw, Hex, Washer Head, Slotted #10-24 x 1/2
10	9484R	Clip
11	STD551125	*Washer, Lock 1/4
12	STD541025	*Nut, Hex 1/4-20
13	23230506	*Screw, Set, 5/16-18 x 3/8
14	120938X	Spacer, Split 0.327 x 0.42 x 2.68
15	STD551031	*Washer 11/32 x 11/16 x 16 Ga.
16	145102	Sheave, Transmission
17	STD541031	*Nut, Hex 5/16-18
19	12000028	Ring, Retainer
20	110653X	Guard, Pinch Point
21	145216	Spacer, Split 0.327 x 0.42 x 1.688
22	104214X	Nut, Cap 5/16-18
23	5015J	Tire
	128952	Rim
	795R	Tire Valve

KEY NO.	PART NO.	DESCRIPTION
24	126875X	Rivet, Drilled
25	STD624003	*Clip, Hairpin
26	131159X574	Guard, Belt
27	132801	Belt, V
28	104679X	Pulley, Idler
29	12000032	Ring, Klip
30	159229	Bracket, Idler
31	102384X	Bolt, Hex 5/16-16 x 12
32	102141X	Shaft, Idler Arm
33	STD523710	*Bolt, Hex 3/8-16 x 1
34	102383X	Counterweight, L.H.
35	74760524	Bolt, Hex 5/16-18 x 1 1/2
36	102331X	Bracket, Reinforcement, L.H.
37	130812	Sheave, Engine
38	145822	Stud, Guard Belt
39	140062	Cap, Plunger
41	19111610	Washer 11/32 x 1 x 10 Ga.
42	151004	Spacer
43	69180	Nut Lock #10-24
44	164173	Belt Keeper

*STANDARD HARDWARE - - PURCHASE LOCALLY

NOTE: All component dimensions given in U.S. Inches.
1 inch = 25.4 mm

TILLER - - MODEL NUMBER 917.293300

MAINFRAME, RIGHT SIDE

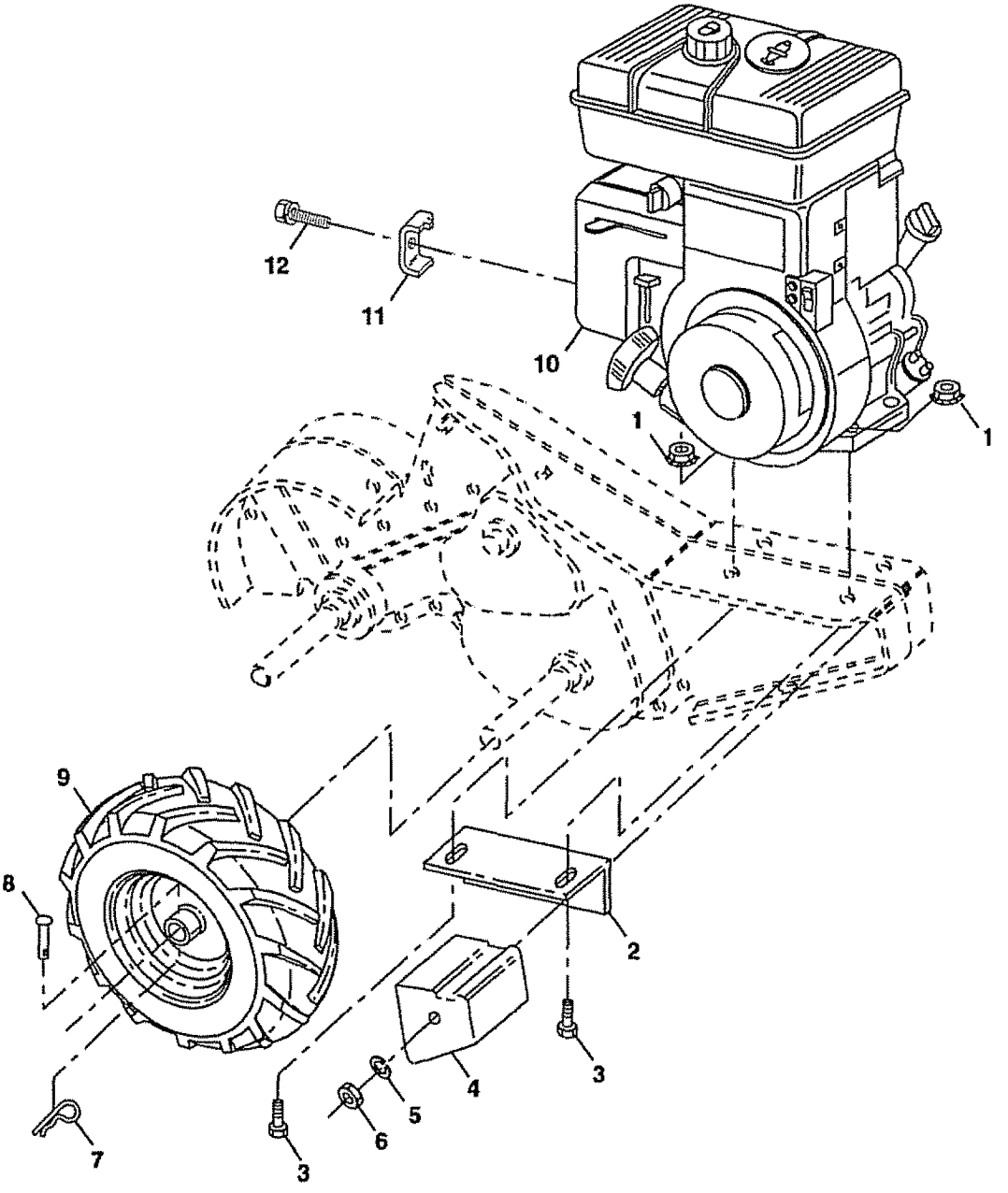

KEY NO.	PART NO.	DESCRIPTION
1	STD541431	*Nut, Keps 5/16-18
2	102332X	Bracket, Reinforcement
3	74760524	Bolt, Hex 5/16-18 x 1-1/2
4	102173X	Counter Weight, R.H.
5	STD551137	*Washer, Lock 3/8
6	STD541037	*Nut, Hex 3/8-16
7	STD624003	*Clip, Hairpin
8	126875X	Rivet, Drilled
9	5015J	Tire
	128952	Rim
	795R	Tire Valve

KEY NO.	PART NO.	DESCRIPTION
10	------	Engine, (See Breakdown) Briggs & Stratton(IP) Model No. 134402, Type No. 1113-E1
11	221535	Clamp
12	94906	Screw

* STANDARD HARDWARE - - PURCHASE LOCALLY

NOTE: All component dimensions given in U.S.inches.
1 inch = 25.4 mm

TILLER - - MODEL NUMBER 917.293300

TRANSMISSION

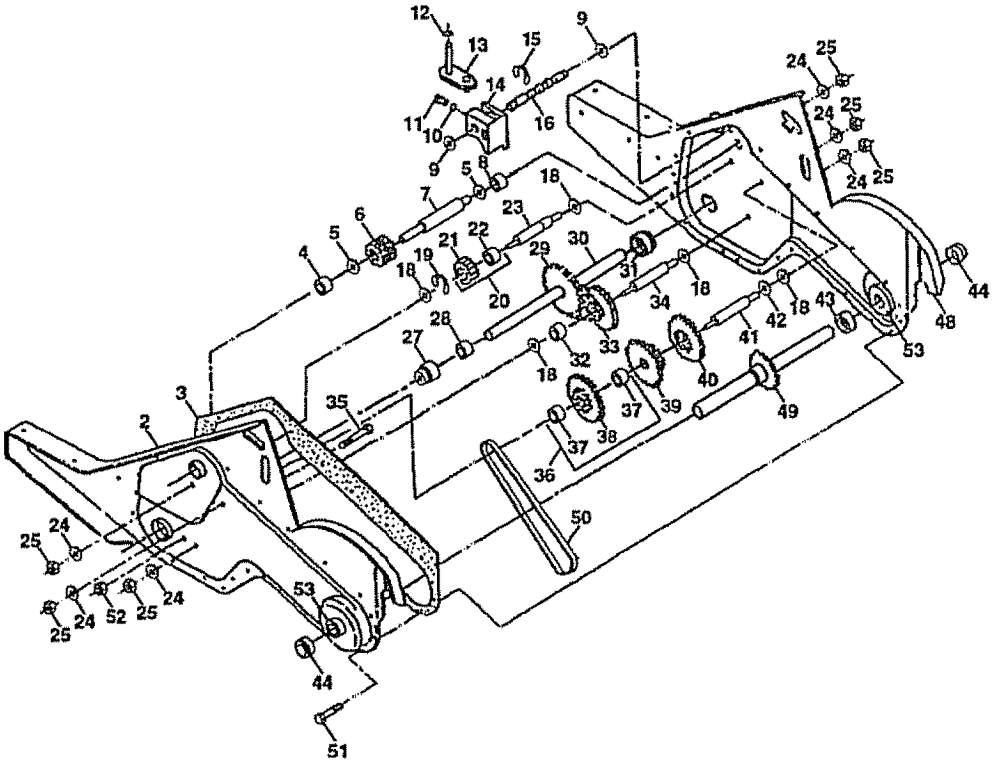

KEY NO.	PART NO.	DESCRIPTION
1	154354	Transmission Assembly (Includes Key Nos. 2-52)
2	150698	Gearcase, L.H. w/Bearing (Includes Key No. 4)
3	106211X	Gasket, Gearcase
4	5020J	Bearing, Needle
5	1370H	Washer, Thrust 5/8 x 1.10 x 1/32
6	137335	Pinion, Input
7	145101	Shaft, Input
8	4895H	Bearing, Needle
9	154467	Washer, Seal
10	7392M	Ball, Steel
11	100371K	Spring, Shift, Fork
12	106160X	O-Ring
13	142145	Arm, Shift
14	8353J	Fork, Shift
15	12000039	Ring, Klip
16	154466	Shaft, Shift
18	4358J	Washer
19	12000040	Ring, Klip
20	102114X	Gear, Assembly, Reverse Idler (Includes Key Nos. 21 and 22)
21	102115X	Gear, Reverse Idler
22	6803J	Bearing, Needle
23	102111X	Shaft, Reverse Idler
24	STD551143	*Washer, Lock 7/16
25	STD541143	*Nut, Hex 7/16-20
27	143009	Bearing, Shaft, Ground Drive L.H.
28	106390X	Spacer 0.765 x 1.125 x 1.23
29	102134X	Chain #35-50 Pitch
30	150737	Ground Shaft Assembly
31	143008	Bearing, Shaft, Ground Drive R.H.
32	106388X	Spacer 0.70 x 1.00 x 1.150
33	102121X	Sprocket and Gear Assembly
34	102112X	Shaft, Reduction (2nd)
35	102101X	Screw, Whiz, Lock 5/16-18 x 3-1/2
36	154355	Sprocket Assembly w/Bearing (Includes Key Nos. 37 and 38)
37	4422J	Bearing, Needle
38	154356	Sprocket, Tine
39	105345X	Gear, Cluster, Red 1st & 2nd
40	105346X	Gear, Reverse
41	8358J	Shaft, Reduction (1st)
42	4220R	Washer, Thrust
43	106146X	Spacer 1.01 x 1.75 x 0.760
44	155236	Seal Asm. Oil
48	150700	Gearcase, R.H. w/Bearing (Includes Key No. 8)
49	132688	Shaft, Tine
50	106147X	Chain, Roller #50-50 Pitch
51	17720408	Screw 1/4-20 x 1/2
52	73220500	*Nut, Hex 5/16-18
53	122204X	Bearing Kit, Tine Shaft
- -	6066J	Grease, Plastilube #1

* STANDARD HARDWARE - - PURCHASE LOCALLY

NOTE: All component dimensions given in U.S.Inches. 1 inch = 25.4 mm

TILLER - - MODEL NUMBER 917.293300

TINE SHIELD

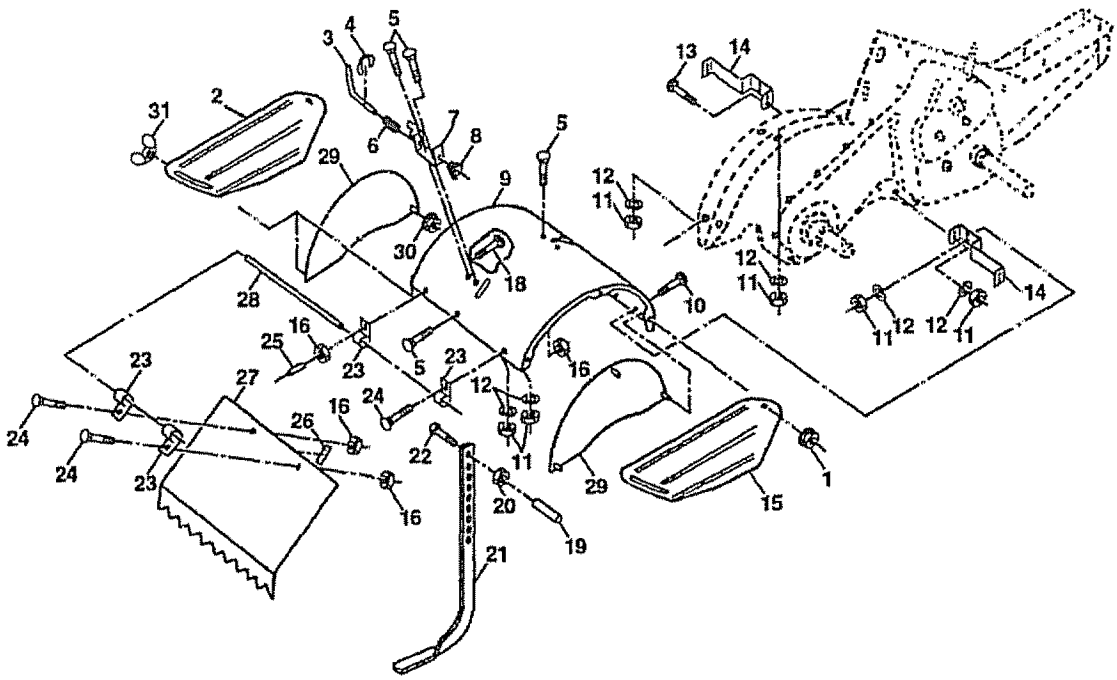

KEY NO.	PART NO.	DESCRIPTION
1	98000129	Nut, Flange 5/16-18
2	161415X574	Shield, Side, Outer L. H.
3	8393J	Pin, Stake, Depth
4	12000036	Ring, Klip
5	STD533107	*Bolt, Carriage 5/16-18 x 3/4 Gr 5
6	8394J	Spring
7	8392J	Bracket, Latch
8	109230X	Spring, Depth Stake
9	124289X574	Shield, Tine
10	STD533110	*Bolt, Carriage 5/16-18 x 1 Gr. 5
11	STD541031	*Nut, Hex 5/16-18
12	STD551131	*Washer, Lock 5/16
13	72110510	Bolt, Carriage 5/16-18 x 1-1/4
14	124311X	Bracket, Shield Tine
15	161414X574	Shield, Side, Outer R.H.
16	73510400	Nut, Hex 1/4-20
17	162175	Nut, Wing Forged 5/16-18
18	STD532512	*Bolt, Carriage 1/4-20 x 1-1/4 Gr. 5
19	102701X	Grip
20	STD541037	*Nut, Hex 3/8-16
21	102156X	Stake, Depth
22	74930632	Bolt, Hex 3/8-16 x 2
23	4440J	Hinge
24	72140404	*Bolt, Carriage 1/4-20 x 1/4
25	6712J	Cap, Vinyl
26	109227X	Pad, Idler
27	102695X574	Shield, Leveling
28	120588X	Pin, Hinge
29	124309X574	Shield, Side
30	73970500	Locknut, Hex, Flange

* STANDARD HARDWARE - - PURCHASE LOCALLY

NOTE: All component dimensions given in U.S. inches
1 inch = 25.4 mm

TILLER - - MODEL NUMBER 917.293300

TINE ASSEMBLY

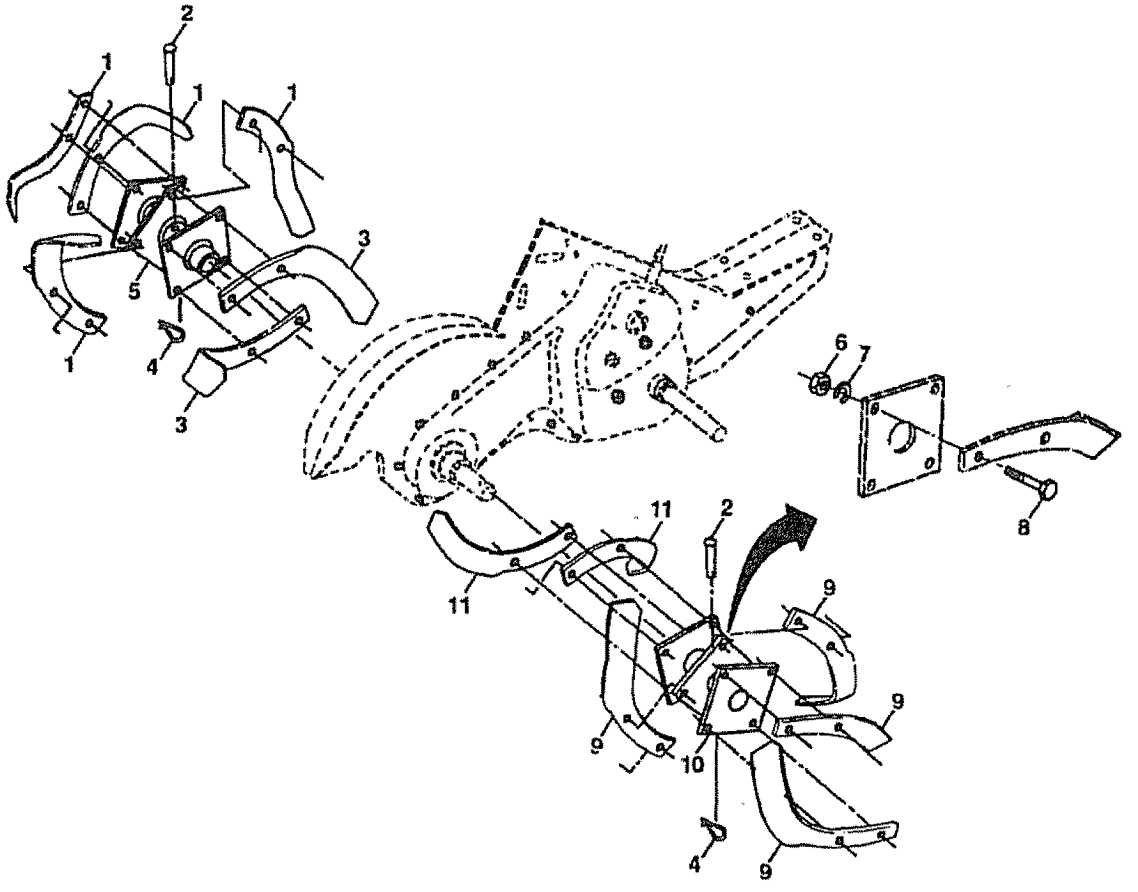

KEY NO.	PART NO.	DESCRIPTION
1	4459J	Tine, Outer, L.H.
2	132673	Pin, Shear
3	6554J	Tine, Inner, L.H.
4	STD624008	*Clip, Hairpin
5	132727	Assembly, Hub and Plate, L.H.
6	73610600	Nut, Hex 3/8-24
7	STD551137	*Washer, Lock 3/8
8	74610616	Bolt, Hex 3/8-24 x 1
9	4460J	Tine, Outer, R.H.
10	132728	Assembly, Hub and Plate, R.H.
11	6555J	Tine, Inner, R.H.

* STANDARD HARDWARE - - PURCHASE LOCALLY

NOTE: All component dimensions given in U.S. inches.
1 inch = 25.4 mm

TILLER - - MODEL NUMBER 917.293300

DECALS

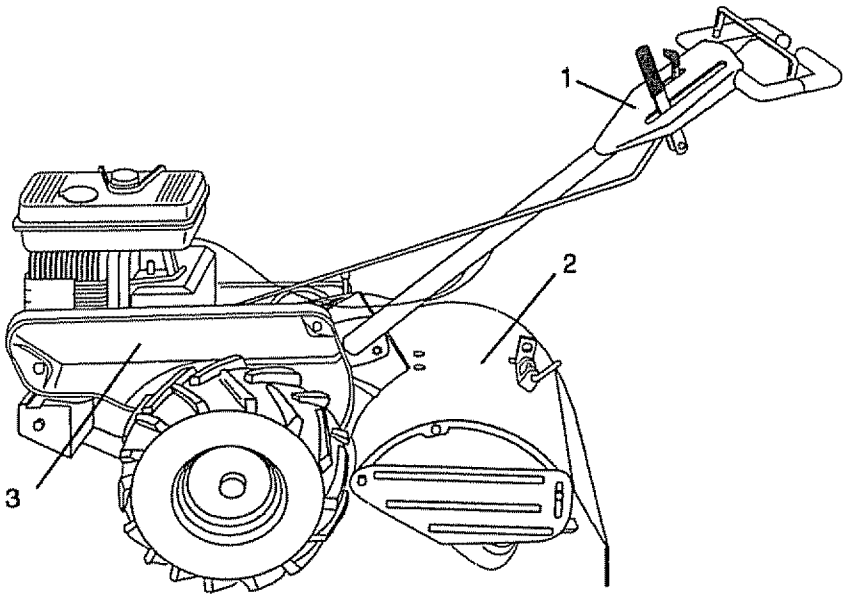

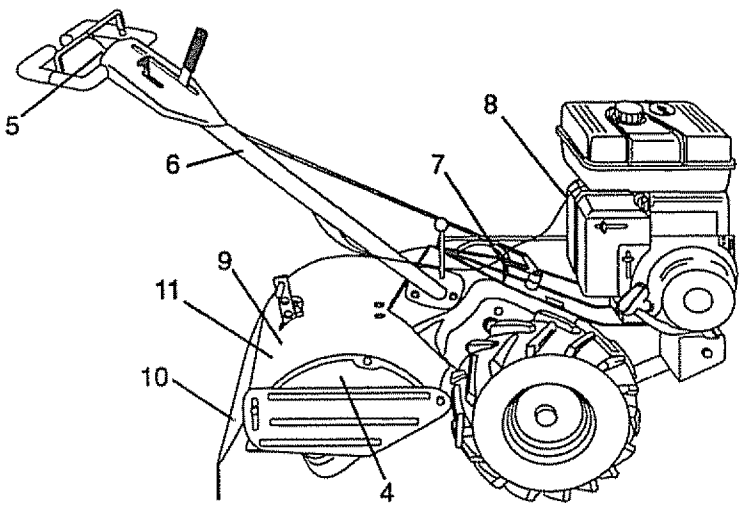

KEY NO.	PART NO.	DESCRIPTION
1	158096	Decal, Logo
2	157991	Decal, Logo
3	157990	Decal, Logo
4	157984	Decal, Description
5	137538	Decal, Caution, Drive Control
6	120431X	Decal, Hand Placement
7	102180X	Decal, Shift Indicator
8	147592	Decal, Operation and Lubrication
9	163094	Decal, Depth Stake
10	120075X	Decal, Warning, Rotating Tines
11	162215	Decal, Tine Shield Wrng Dom
- -	163158	Manual, Owner's (English)
- -	163159	Manual, Owner's (Spanish)

ENGINE, BRIGGS & STRATTON - - MODEL NUMBER 134402, TYPE NO. 1113-E1

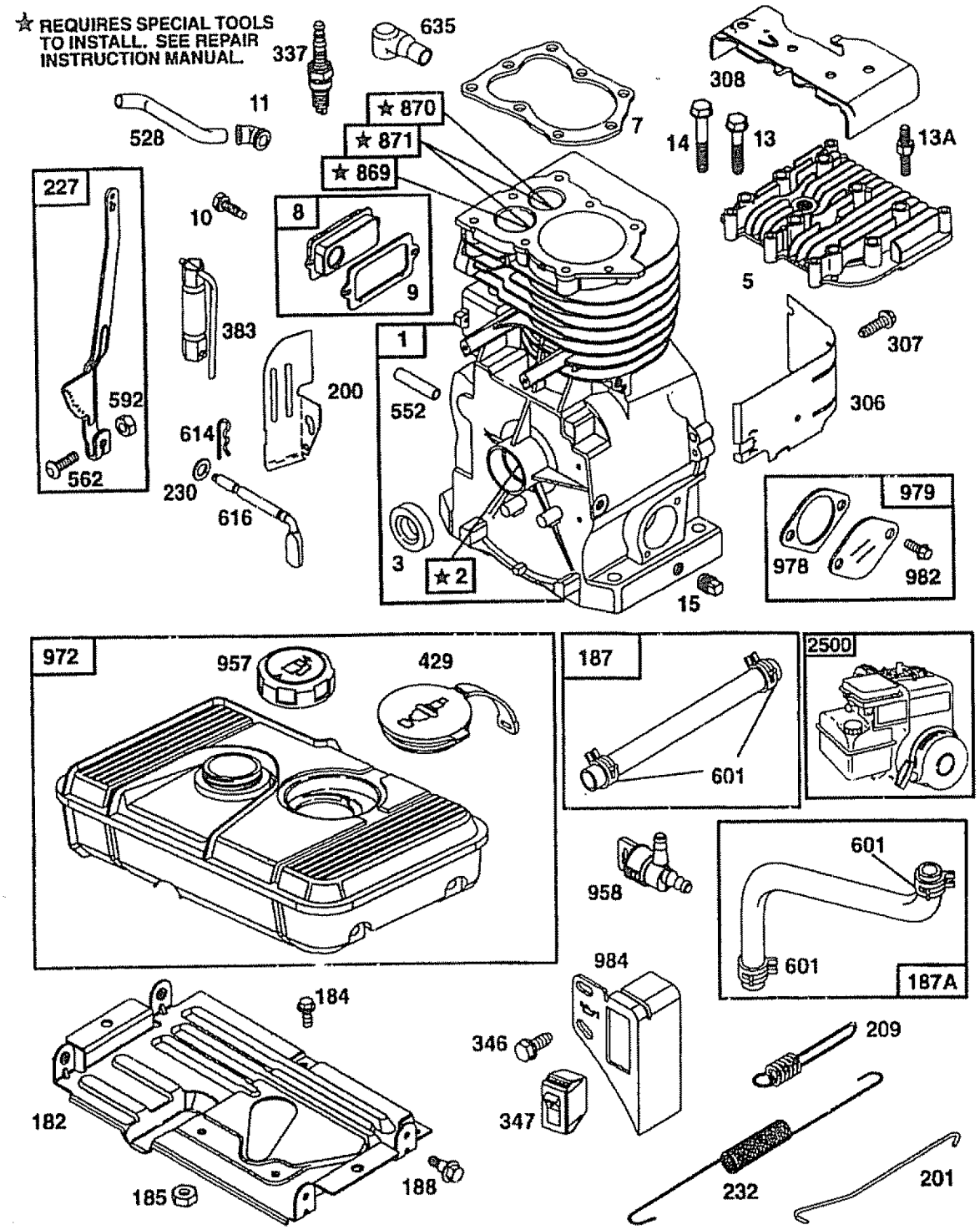

TILLER - - MODEL NUMBER 917.293300

ENGINE, BRIGGS & STRATTON - - MODEL NUMBER 134402, TYPE NO. 1113-E1

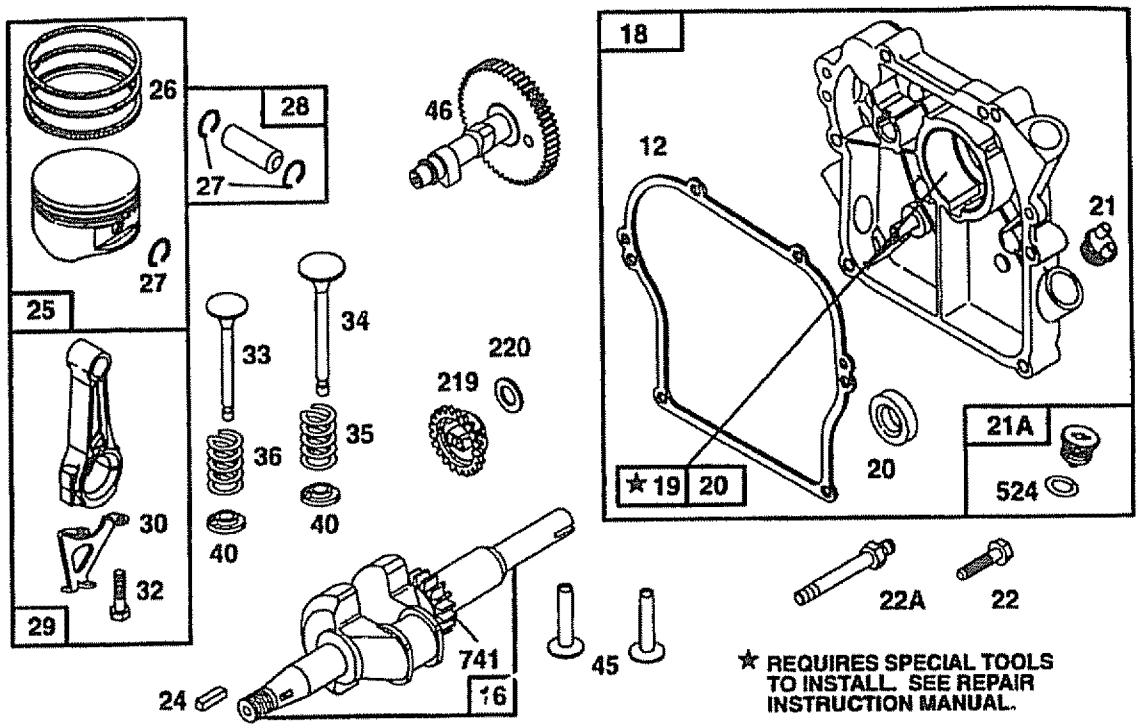

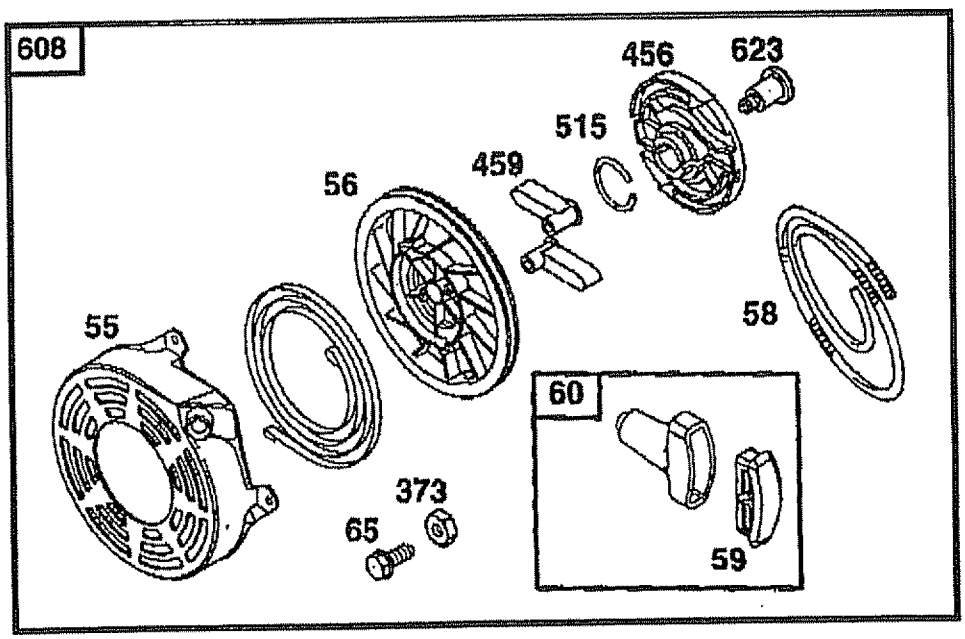

TILLER - - MODEL NUMBER 917.293300

ENGINE, BRIGGS & STRATTON - - MODEL NUMBER 134402, TYPE NO. 1113-E1

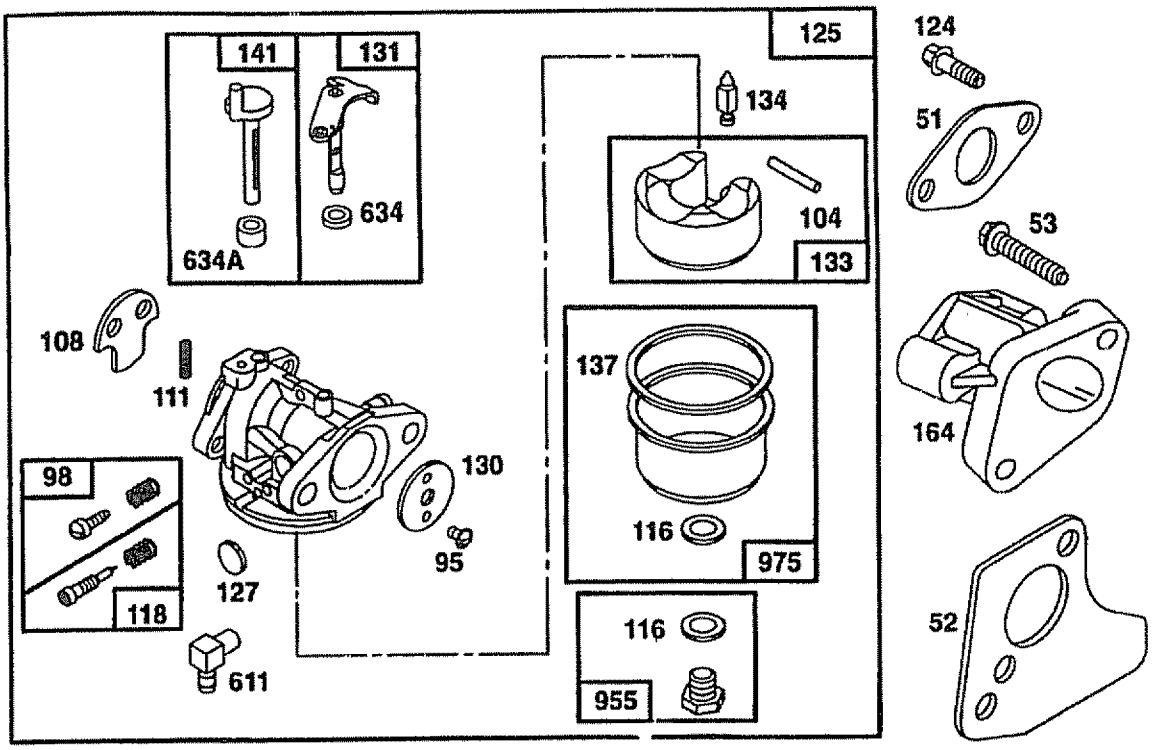

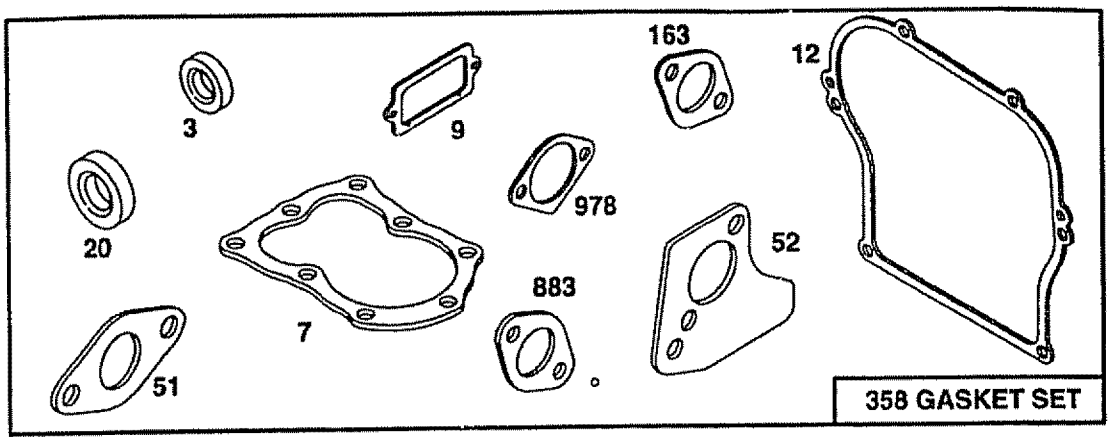

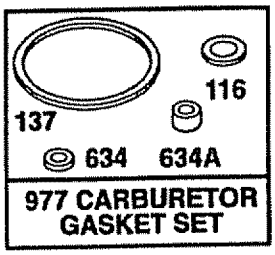

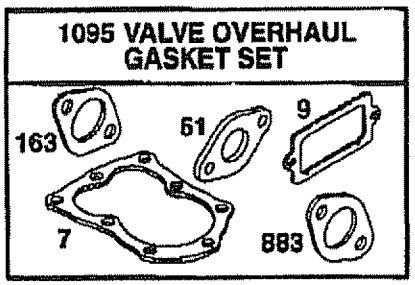

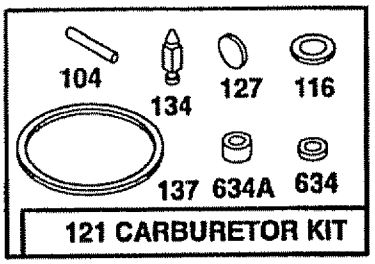

TILLER - - MODEL NUMBER 917.293300
ENGINE, BRIGGS & STRATTON - - MODEL NUMBER 134402, TYPE NO. 1113-E1

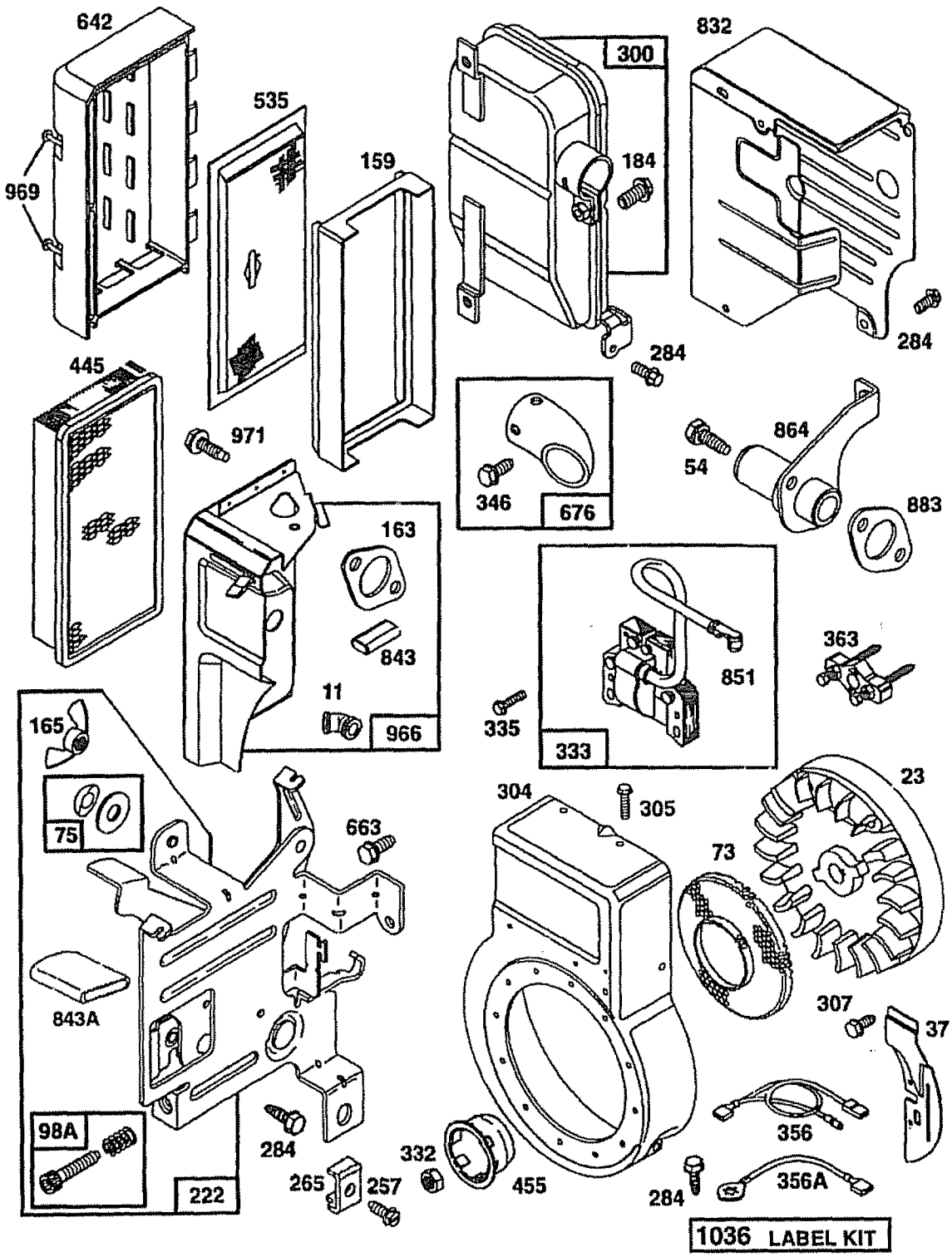

TILLER - - MODEL NUMBER 917.293300

ENGINE, BRIGGS & STRATTON - - MODEL NUMBER 134402, TYPE NO. 1113-E1

KEY NO.	PART NO.	DESCRIPTION
1	495133	Cylinder Assembly
2	399268	Bushing
3	299819	* Seal, Oil
5	214040	Head, Cylinder
7	272157	* Gasket, Cylinder Head
8	495774	Breather Assembly
9	27549	* Gasket, Breather
10	94621	Screw, Breather Mounting
11	66578	Grommet
12	270080	* Gasket, Crankcase, .015" Thick (Standard)
	270125	* Gasket, Crankcase, .005" Thick
	270126	* Gasket, Crankcase, .009" Thick
13	94221	Screw, Cylinder Head 2-5/16
13A	94915	Stud, Cylinder Head
14	94679	Screw, Cylinder Head 2-15/32
15	94916	Plug, Oil Drain, 1/4" Standard, Square Head
16	492088	Crankshaft
	94388	Crankshaft Gear Key
18	494044	Cover, Crankcase
19	495660	Bushing
20	294606	Seal, Oil
21	281658	Plug, Oil Fill
21A	399195	Plug, Oil Fill (For High Oil Fill Hole)
22	94980	Screw, Crankcase Cover Mounting
22A	94917	Stud, Hex Head, Crankcase Cover Mounting
23	399673	Flywheel
24	222698	Key, Flywheel
25	393819	Piston Assembly, Standard Size
	393820	Piston Assembly, .010" Oversize
	393821	Piston Assembly, .020" Oversize
	393822	Piston Assembly, .030" Oversize
26	399067	Ring Set, Standard Size
	399014	Ring Set, .010" Oversize
	399015	Ring Set, .020" Oversize
	399016	Ring Set, .030'ÕOversize
27	26026	Lock, Piston Pin
28	298909	Pin, Piston, Standard Size
	298908	Pin, Piston, .005" Oversize
29	299430	Rod, Connecting
	390459	Rod, Connecting, .020" Undersize Crankpin Bore
30	225183	Dipper, Connecting Rod
32	94699	Screw, Connecting Rod
33	211119	Valve, Exhaust
34	261044	Valve, Intake
35	260552	Spring, Intake Valve
36	26478	Spring, Exhaust Valve
37	222443	Guard, Flywheel
40	225257	Retainer, Spring
45	260642	Tappet, Valve
46	214726	Gear, Cam
51	272295	* Gasket, Carburetor
52	272585	* Gasket, Intake Port
53	94923	Screw, Torx™, Hex
54	94706	Screw, Hex Head
55	497442	Housing, Rewind Starter
56	498144	Pulley, Starter (Includes Rewind Spring)
58	280399	Rope, Starter (Cut to Required Length)
59	396892	Insert, Starter Handle
60	393152	Handle, Rewind Starter
65	94686	Screw, Starter Mounting
73	225176	Screen, Rotating
75	495659	Washer Kit
95	94098	Screw, Round Head
98	398185	Screw, Idle Adjusting
98A	493280	Screw Assembly, Speed Adjustment
104	- - -	* Pin, Hinge (Sold in Kit Only)
108	224783	Valve, Choke
111	262820	Spring, Lever
116	- - -	* Gasket, Sealing (Sold in Kit Only)
121	498260	Carburetor Kit
124	94920	Screw, Torx™, Hex
125	498599	Carburetor
127	- - -	* Plug, Welch
130	223470	Valve, Throttle
131	493556	Shaft, Throttle
133	398187	Float, Carburetor
134	398188	* Valve, Inlet (Includes Seat)
137	- - -	* Gasket, Bowl (Sold in Kit Only)

* Included in Gasket Set (495661)

* Included in Carburetor Kit (498260)

* Included in Carburetor Gasket Set (498261)

* Included in Valve Overhaul Gasket Set (498531)

NOTE: All component dimensions given in U.S. inches
1 inch = 25.4 mm

TILLER - - MODEL NUMBER 917.293300

ENGINE, BRIGGS & STRATTON - - MODEL NUMBER 134402, TYPE NO. 1113-E1

KEY NO.	PART NO.	DESCRIPTION
141	498593	Shaft, Choke
159	280871	Support, Air Cleaner
163	272537	Gasket, Air Cleaner
164	281247	Manifold, Intake
165	94692	Nut, Wing
182	224669	Bracket, Fuel Tank
184	94905	Screw, Hex Head
185	94010	Nut, Hex
187	298049	Line, Fuel (11" Long, Cut to Suit)
187A	495218	Line, Fuel, Molded
188	94895	Screw, Shoulder
200	223886	Guide, Air
201	262865	Link
209	262283	Spring, Governor
219	494845	Gear, Governor
220	221551	Washer, Thrust
222	494899	Bracket, Control
227	496082	Lever Assembly, Governor
230	94927	Washer, Governor Lever
232	260585	Spring, Link
265	221535	Clamp, Casing
267	94906	Screw, Slotted Hex
284	94929	Screw, Hex Head
300	494562	Muffler, Exhaust
304	497018	Housing, Blower
305	94786	Screw, Hex
306	224820	Shield, Cylinder
307	94680	Screw, Hex Head, Cylinder Shield
308	224740	Cover, Cylinder Head
332	94877	Nut, Flywheel
333	397358	Armature, Magneto
335	93414	Screw, Armature
337	802592	Plug, Spark (1-7/8" High, 48mm, Resistor Type)
346	94896	Screw, Hex Head, Sems
347	493521	Switch, Stop
356	495135	Wire, Stop (Armature to Switch)
356A	495118	Wire, Stop (Stop Switch to Ground)
358	495661	Gasket Set
363	19069	Puller, Flywheel
373	94908	Nut, Hex
383	89838	Wrench, Spark Plug
429	281190	Cover, Spark Plug
445	494511	Filter, Air
455	225121	Cup, Flywheel
456	281503	Retainer, Spring
459	281505	Pawl, Ratchet
515	263073	Spring, Friction
524	271485	* Seal, Oil Fill
528	231818	Tube, Breather
535	492889	Filter, Air
552	231079	Bushing, Governor Crank
562	94907	Bolt, Governor Lever
592	231978	Nut, Hex
601	93053	Clamp, Hose, Green
	93807	Clamp, Hose, Black
608	497830	Starter, Rewind
611	494451	Connector, Fuel Line
614	93306	Pin, Cotter
616	495243	Crank, Governor
623	94943	Screw, Shoulder
634	- - -	Seal, Shaft (Sold in Kit Only)
634A	- - -	Seal, Choke Shaft (Sold in Kit Only)
635	66538	Elbow, Spark Plug
642	281188	Cover, Air Cleaner
663	93343	Screw, Sems
676	495074	Deflector Assembly
741	262992	Gear, Timing
	Uses:	94388 Key, Woodruff
832	494903	Guard, Muffler
843	280149	Sleeve, Lever
843A	280643	Sleeve, Lever
851	493880	Terminal, Cable
864	494904	Flange, Muffler
869	211787	Seat, Intake Valve
870	263094	Seat, Exhaust Valve, Cobalite™
871	262001	Guide, Exhaust Valve
	63709	Guide, Intake Valve
883	272309	* Gasket, Exhaust
955	497610	Screw, Fuel Bowl, Standard
	493869	Screw, Fuel Bowl, High Altitude
957	493988	Cap, Fuel Tank
958	494769	Valve, Shut-Off
966	494902	Base, Air Cleaner
969	94872	Screw, Hex Head
971	94727	Screw, Hex Head
972	495345	Tank, Fuel
975	493640	Bowl, Float
977	498261	Gasket Set, Carburetor
978	273326	* Gasket Cover
979	494807	Cover, Oil Gard™
982	94658	Screw, Oil Gard™ Cover
984	224746	Bracket, Indicator Light
1036	499348	Label Kit, Emission
1095	498531	Gasket Set, Valve Overhaul
2500	134402-0113	Replacement Engine
— —	495952	Replacement Shortblock

* Included in Gasket Set (495661)

* Included in Carburetor Kit (498261)

* Included in Carburetor Gasket Set (490937)

* Included in Valve Overhaul Gasket Set (498531)

NOTE: All component dimensions given in U.S. inches
1 inch = 25.4 mm

For the repair or replacement parts you need delivered directly to your home
Call 7 am - 7 pm, 7 days a week

1-800-366-PART

(1-800-366-7278)

Para ordenar piezas con entrega a domicilio – 1-800-659-7084

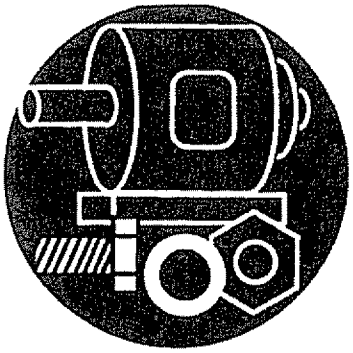

For in–house major brand repair service
Call 24 hours a day, 7 days a week

1-800-4-REPAIR

(1-800-473-7274)

Para pedir servicio de reparación a domicilio – 1-800-676-5811

For the location of a Sears Parts and Repair Center in your area
Call 24 hours a day, 7 days a week

1-800-488-1222

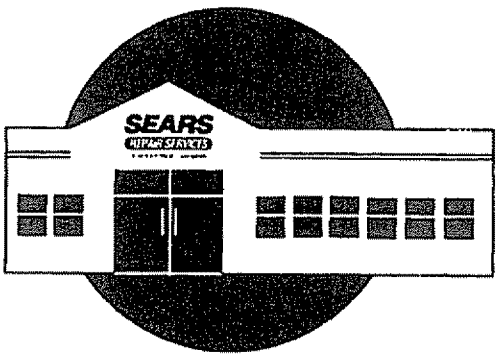

For information on purchasing a Sears Maintenance Agreement or to inquire about an existing Agreement
Call 9 am – 5 pm, Monday–Saturday

1-800-827-6655

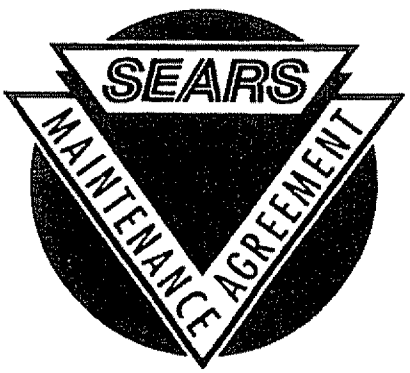

When requesting service or ordering parts, always provide the following information:

- Product Type
- Part Number
- Model Number
- Part Description

SEARS
REPAIR SERVICES
America's Repair Specialists

163158 Rev. 7 2.17.98 TR

Printed in U.S.A.