Blomberg

Front-Loading Dryer

Owner's Guide:

Installation and Operation Instructions

BLDV243700SEWG

EN

2960314311_EN/220725.1006

RECYCLED &
RECYCLABLE PAPER

Please read this user manual first!

Dear Customer,

Thank you for prefering a Blomberg product. We hope that your product which has been manufactured with high quality and technology will give you the best results. We advise you to read through this manual and the other accompanying documentation carefully before using your product and keep it for future reference. If you transfer the product to someone else, give its manual as well. Pay attention to all details and warnings specified in the user manual and follow the instructions given therein.

Use this user manual for the model indicated on the cover page.

	Read the instructions.

Explanation of symbols

Throughout this user manual the following symbols are used:

	Important information or useful hints about usage.
	Warning for hazardous situations with regard to life and property.
	Warning against electric shock.
	Warning against hot surfaces.
	Warning against fire hazard.

	Packaging materials of the product are manufactured from recyclable materials in accordance with our National Environment Regulations.

Do not dispose of the packaging wastes with the domestic waste or other wastes, discard them to the dedicated collection points designated by the local authorities.

TABLE OF CONTENTS

1 Your Dryer 4

2 Important Safety Instructions 5

3 Installation Instructions 9

3.1 Electrical connection.....9
3.2 Grounding Instructions 10
3.3 Appropriate installation location 11
3.4 Minimum Installation Clearances.....11
3.5 Use on top of a washer 11
3.6 Adjusting the feet.....11
3.7 Ventilation duct and connection 11
3.8 Destroying packaging material.....14

4 Operating Instructions 15

4.1 First Use.....15
4.2 Garments suitable for drying.....15
4.3 Garments unsuitable for drying.....15
4.4 Preparing clothes to be dried.....16
4.5 Correct load capacity 16

5 Running the product 17

5.1 Control Panel.....17
5.2 Symbols.....17
5.3. Preparation of drying machine.....18
5.4 Program selection and consumption chart.....18
5.5 Auxiliary functions.....19
5.6 Warning indicators.....21
5.7 Starting the program.....22
5.8 Child Lock.....22
5.9 Changing the program after it is started.....22
5.10 Cancelling the program 23
5.11 End of program.....23
5.12 Odour feature 23
5.13 HomeWhiz Function 23

6 Technical Specifications 25

7 User maintenance and cleaning instructions 26

7.1 Lint filter 26
7.2 Sensor 26

8 Troubleshooting 27

9 Warranty Statement 28

1 Your Dryer

Overview

Figure 1

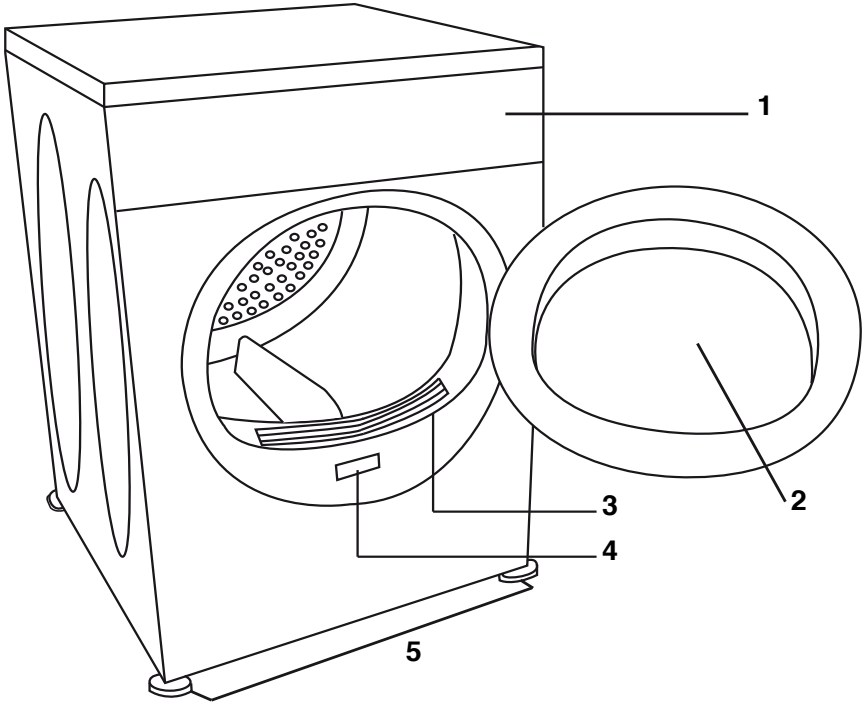

1 Control Panel

2 Loading Door

3 Lint Filter

4 Type label

5 Adjustable Feet

NOTE: Specifications of this appliance may change without notice to improve the quality of the product. Drawings in this manual are schematic and may not match your product exactly. Values stated on the dryer labels or in the documentation accompanying it are obtained in the laboratory in accordance with relevant standards. Depending on operational and environmental conditions of the appliance, values may vary.

2 Important Safety Instructions

WARNING : To reduce the risk of fire or electric shock resulting in serious injury or death when using this appliance, follow the basic precautions including the following:

Read all instructions before using the appliance. Failure to follow these instructions will increase the risk of fire or electric shock and will void the warranty.

WARNING : This product has been designed for home use only.

The appliance must be operated at temperatures between +5°C and +35°C. (41°F and +95°F)
The appliance must not be installed behind a lockable door, a sliding door or a door with the hinges on the opposite side to that of the tumble dryer.
Do not install or store this appliance where it will be exposed to weather.
Do not tamper with the controls.
Do not repair or replace any part of the appliance or attempt any servicing unless specifically recommended in the user-maintenance instructions or in published user-repair instructions that you understand and have the skills to carry out.
Never wash the appliance with water.
Never touch the plug with wet hands.
Never pull from the cable to unplug the dryer.
Do not operate the appliance if the power cord or plug is damaged.
For malfunctions that cannot be solved by information in the operating manual: Turn off and unplug the appliance and call an authorized service provider.
This appliance must be grounded. In the event of malfunction or breakdown, grounding will reduce the risk of electric shock by providing a path of least resistance for electric current.

This appliance is equipped with a cord having an equipment-grounding conductor and a grounded plug. The plug must be plugged into an appropriate outlet that is properly installed and grounded in accordance with all local codes and ordinances.

WARNING : Improper connection of the equipment-grounding conductor can result in a risk of electric shock. Check with a qualified electrician or service representative or personnel if you are in doubt as to whether the appliance is properly grounded.

Power cord plug must be within easy reach after installation.
To reduce the risk of fire or electric shock, do not use extension cords, multi-plugs or an adapter to connect the dryer to electrical mains.
Do not modify the plug provided with the appliance: if it will not fit the outlet, have a proper outlet installed by a qualified electrician.
If the power supply cord is damaged, it must be replaced by the manufacturer, its service agent or similarly qualified persons in order to avoid an electrical hazard.
The appliance must not be operated unless it is repaired!
Ventilation openings in the base must not be obstructed by carpets, etc.
Exhaust air must not be discharged into a flue used for exhausting fumes from appliances burning gas or other fuels.
Adequate ventilation must be provided to avoid the back flow of gases into the room from appliances burning other fuels, including open fires.
Do not dry articles that have been previously cleaned in, washed in, soaked in or spotted with gasoline, dry-cleaning solvents or other flammable or explosive substances as they give off vapors that could ignite or explode.
Do not use the tumble dryer if industrial chemicals have been used for cleaning what you want to dry.
Do not dry unwashed items in the tumble dryer.

Items such as foam rubber (latex foam), shower caps, waterproof textiles, rubber-backed articles and clothes or pillows fitted with foam rubber pads should not be dried in the tumble dryer.
Do not use fabric softeners or products to eliminate static unless recommended by the manufacturer of the fabric softener or product.
 does not recommend the use of fabric softening dryer sheets in our Electric Dryers. The contents of these sheets can clog the units filters, causing reduced air flow and possible damage to the heating system. You may use fabric softeners in the washing machine but not the dryer
The appliance may only be used for the drying of textiles that are marked accordingly.
Undergarments that contain metal reinforcements should not be placed in a tumble dryer. Damage to the tumble dryer can result if any of the metal reinforcement come loose during drying.
Before loading check all garments for lighters, coins, metal pieces, needles, etc.
The use of fabric softener sheets is not recommended.
Do not place items exposed to cooking oils in your dryer. Items contaminated with cooking oils may contribute to a chemical reaction that could cause a load to catch fire. To reduce the risk of fire due to contaminated loads, the final part of a tumble dryer cycle occurs without heat (cool down period). Avoid stopping a tumble dryer before the end of the drying cycle unless all items are quickly removed and spread out so that the heat is dissipated.

WARNING : Never stop the tumble dryer before the end of the drying cycle unless all items are quickly removed and spread out to dissipate heat.

Do not reach into the appliance if the drum is moving.

Do not allow children to play on or in the appliance.Close supervision of children is necessary when the appliance is used near children.
Keep pets away from the appliance during the drying cycle.
Before the appliance is removed from service or discarded, remove the door to the drying compartment.
Close the loading door when you leave the area where the dryer is located.
This appliance is not intended for use by persons (including children) with reduced physical, sensory or mental capabilities, or lack of experience and knowledge, unless they are supervised or have been given instructions concerning the use of the appliance by a person responsible for their safety.
Clean lint filter before or after each load.
Keep area around the exhaust vent and adjacent surrounding areas free from the accumulation of lint, dust, and dirt.
The interior of the appliance and exhaust ductwork should be cleaned periodically by qualified service personnel.
Never use the dryer without the lint filter.
When your dryer is not in use or after the laundry is taken out following the completion of drying process, turn off by using the On/Off button. In cases when the On/Off button is in the On position while the dryer is plugged in, keep the door of the dryer closed.
For power saving in models with lamps, when your dryer is not in use, keep the door closed if the On/Off button is in the On position and the dryer is energized.
Do not use replacement parts that have not been recommended by the manufacturer (e.g. parts made at home using a 3D printer).

WARNING : This product can expose you to chemicals including Nickel (Metallic) which is known to the State of California to cause cancer.
For more information go to www.P65Warnings.ca.gov
Note : Nickel is a component in all stainless steel and some other metal components.

WARNING: Failure to follow these instructions could result in a risk of fire

•The clothes dryer (“appliance‘) installation must be performed by a qualified installer.
•Install the appliance according to the manufacturer’s instructions and local codes.
•Do not install a clothes dryer with flexible plastic venting materials. If flexible metal (foil type) duct is installed, it must be of a specific type identified by the ap pliance manufacturer as suitable for use with clothes dryers. Flexible venting materials are known to collapse, be easily crushed, and trap lint. These conditions will obstruct the clothes dryer’s airflow and increase the risk of fire.

SAVE THESE INSTRUCTIONS

3.1 Electrical connection

Connect the appliance to a grounded outlet protected by a fuse or circuit breaker of suitable capacity.

4-wire receptacle (14-30R)	Dryer shipped with cord to fit this type 4 -wire receptacle
3-wire receptacle (10-30R)	If you have 3-wire receptacle, like this, a 3-wire dryer cord must be purchased locally.

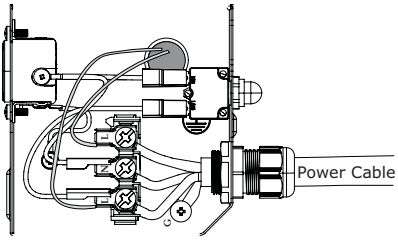

3-Wire Electrical Connection

If your receptacle is a 3-wire receptacle as shown below, you must obtain a 3-wire dryer cord. A dryer cord can usually be found at your local hardware supply, electrical supply or home center. Cord should have closed loop or upturned end wire terminating connectors. The cord kit must be marked “For Use with Clothes Dryers”.

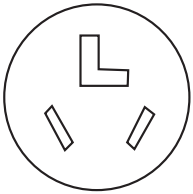

3- wire receptacle
(10-30R)

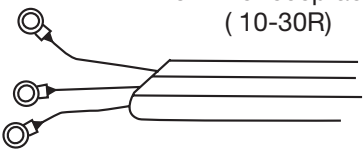

Typical 3- Wire Dryer Cord 240V/30 amp
NEMA 10-30 Type SRDT

	If the dryer is installed in a mobile home, recreational vehicles, new branch-circuit installations or in areas where local codes do not permit grounding through the neutral conductor, only a 4-wire power supply cord shall be used.

To change the cord:

1. Make sure that the dryer is not plugged into any power outlet.

	DO NOT plug end of dryer power cord into a live receptacle before connecting dryer power cord to dryer terminals and closing junction/splitter box as described below.
	DO NOT repair old power supply cords. Power cord must be changed only by a qualified person. There is a risk of electric shock!

2. Remove the screw from the cover of the junction box located at the top rear of the dryer.
3. Remove the red, white and black wire from the terminal block.
4. Remove the green ground wire from the ground terminal.
5. Loosen the strain relief clamp holding the 4-wire cable.
6. Thread the 4-wire cable out through the strain relief clamp.
7. Thread the new 3-wire dryer cord through the strain relief clamp.
8. Attach the power cord Ground conductor (the center wire) to the terminal labeled N. Connect the terminal labeled N and the Ground terminal labeled G with the supplied short cable. Tighten the terminals so that they securely hold the conductors.
9. Attach the two remaining power cord outer conductors to the 2 terminals labeled L. Tighten both screws so that the power conductors are securely held in place.
10. Tighten the strain relief so that the power cord cannot be moved.
11. Replace the cover on the junction box and fasten in place.

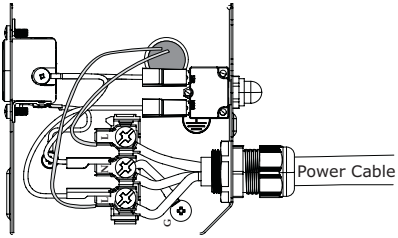

The dryer is now ready to be plugged into the 3-wire receptacle of the proper rating.

The receptacle should be located so that the plug and receptacle will be accessible with the dryer in its installed position.

3.2 Grounding Instructions

This appliance must be grounded. In the event of malfunction or breakdown, grounding will reduce the risk of electric shock by providing a path of least resistance for electric current. This appliance is equipped with a cord having an equipment-grounding conductor and a grounding plug. The plug must be plugged into an appropriate outlet that is properly installed and grounded in accordance with all local codes and ordinances.

- Power cord plug must be within easy reach after installation.
- The voltage and the allowed fuse/breaker protection are specified in the section “Technical Specifications”.
- The stated voltage must match your mains voltage.
- Connection via extension cords or multi-plugs should not be made.
- The main fuse/breaker and switches must have a contact distance of minimum 3 mm.

	A damaged power cable must be replaced by a qualified electrician.
	WARNING – Improper connection of the equipment-grounding conductor can result in a risk of electric shock. Check with a qualified electrician or service representative or personnel if you are in doubt as to whether the appliance is properly grounded. Do not modify the plug provided with the appliance: if it will not fit the outlet, have a proper outlet installed by a qualified electrician.
	The appliance must not be operated unless it is repaired! There is the risk of electric shock!

3.3 Appropriate installation location

•Install your appliance in environments that have no risk of freezing and are in a stable and level position.
•Do not place your appliance on a high pile rug or on similar surfaces.
•Operate your appliance in a well-ventilated, dust-free environment.
•Do not block the air ducts in front of and under the dryer.

	Make sure that your appliance is not placed on the power cable.
	Keep appliance at least 0.6” (1.5 cm) from the edges of other furniture.

3.4 Minimum Installation Clearances

	Alcove or Built-under	Closet
Sides	0.16 in. (4 mm)	0.16 in. (4 mm)
Top	1 in. (25 mm)	1 in. (25 mm)
Rear	4 in. (100 mm)	4 in. (100 mm)
Front	0.20 in. (5 mm)	0.20 in. (5 mm)

Ventilation Requirements
Closet door must have 2 openings, one located 3.2 inches (8 cm) from bottom of door having a minimum area of 16 sq. inches (103 cm2) and the other one located 3 inches (7.5 cm) from top of door having a minimum area of 46 sq. inches (294 cm2).

3.5 Use on top of a washer

•A stacking-kit (Part no: 297 954 0100) should be used between the washer and dryer for use on top of a washer. The stacking-kit should be installed by the Authorized Service provider.
•Place the appliance on a solid floor. If it is to be placed on top of a washer, the approximate weight together may reach 397 lbs (180 kg) when they are full. Therefore, the floor must be capable of carrying the load placed on it!

3.6 Adjusting the feet

In order to ensure that your appliance operates almost silently and vibration-free, it must stand level and balanced on its feet. The all feet of the appliance can be adjusted. Balance the appliance by adjusting the feet.

	Do not use any tools to loosen the adjustable feet. Otherwise, they may be damaged.
	Never unscrew the adjustable feet from their housings.

3.7 Ventilation duct and connection

Ventilation duct ensures exhaust of air from inside the appliance.
The vented dryer has 1 air outlet.

	Only rigid or flexible metal duct should be used for exhausting.
	Risk of Fire. Do not install a booster fan in the exhaust duct.

• In Canada, the diameter of the duct to be used should be 4” (102 mm). In United States, the regulation for the required exhaust duct diameter must be followed.
Maximum duct length is given in the table below:

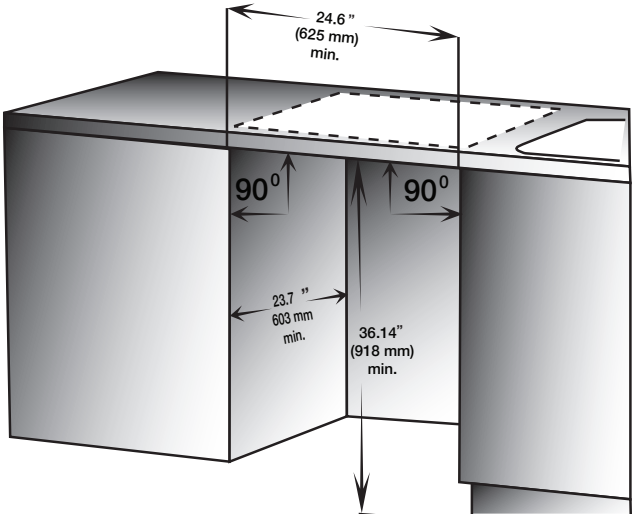

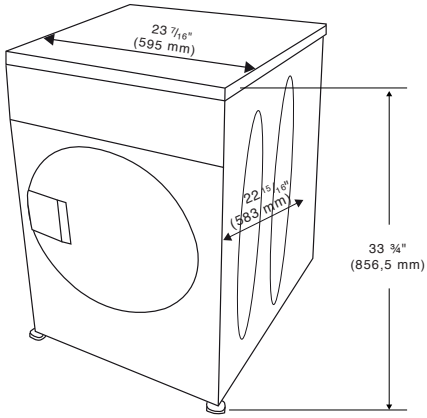

Metal rigid duct	
Number of Elbows	Length
0	92ft (28.0m)
1	82ft (25.0m)
2	72ft (21.9m)
3	62ft (18.9m)
4	52ft (15.8m)

Air Flow : 120 CFM (without duct connection)

To connect a ventilation duct;
1.Connect the air outlet metal duct to the spacer by turning it counter-clockwise.
2.Make the duct passages as shown in the illustration below.

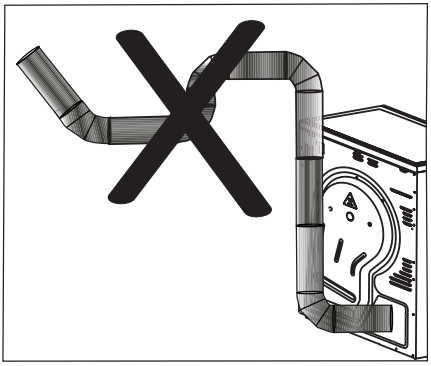

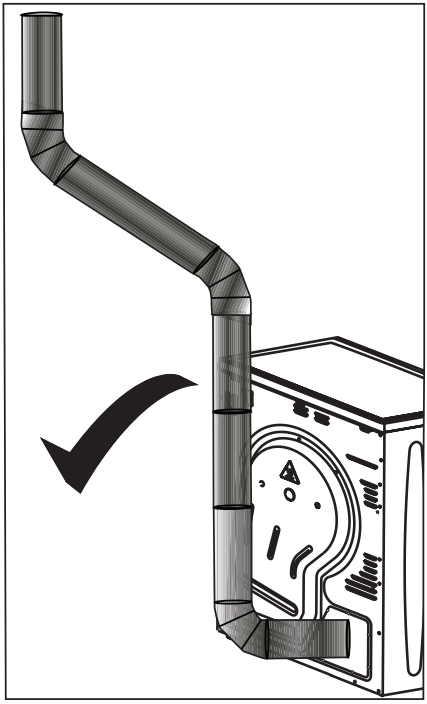

	Exhaust of humid air from the dryer into the room is to be avoided. It may damage the walls and furniture in the room.
	The ventilation duct can be routed outdoors via a window or it can be connected to the air outlet in a bathroom.

	Air outlet duct must be extended directly outdoors. There must be a limited number of elbows to not hinder air flow.
	To prevent water accumulation in the duct, make sure it is not folded on the floor.
	In Canada only those foil-type flexible ducts, if any, specificially identified for use with the appliance by the manufacturer shallbe used. In the United States, only those foil-type flexible ducts, if any, specifically identified for use with the appliance by the manufacturer and that comply with the Outline for Clothes Dryer Transition Duct, Subject 2158A, shall be used.

	The appliance should not be vented into a chimney, a wall, a ceiling, an attic, a crawl space or a concealed space of a building.
	Do not operate the appliance at the same time with heaters such as a coal or gas stove. Airflow may cause the chimney to flare up.

	Care must be taken not to pinch or bend the ducts.
	The end of the hose should not be bent, it should not be stepped on and it must not be folded between the drain and the dryer.
	The total length of flexible metal duct shall not exceed 7.8 foot (2.4 m).
	The duct shall not be assembled with screws or other fastening means that extend inside the duct to catch lint.

	The appliance should not be vented into a chimney, a wall, a ceiling, an attic, a crawl space or a concealed space of a building.

3.8 Destroying packaging material

	Packaging material can be dangerous to children. Keep the packaging materials out of the reach of children or dispose of them accordingly.

Do not dispose of them together with normal domestic waste.
Packaging materials of your appliance are manufactured from recyclable materials.

4 Operating Instructions

WARNING: To reduce the risk of fire, electric shock, or personal injury, read the **2. IMPORTANT SAFETY INSTRUCTIONS** before operating this appliance.

LAUNDRY DRYING SYMBOLS							
Drying Symbols	Suitable for dryer	No Iron	Sensitive / Delicate dry	Do not dry with dryer	Do not dry	Do not dry-clean	
Drying Settings	At any temperature	At high temperature	At medium temperature	At low temperature	Without heating	Hang to dry	Lay to dry
Drying Settings	Hang wet to dry	Lay in shadow to dry	Dry-cleanable				
IRON	Iron -						
IRON	Dry or Steam	Iron at high temperature	Iron at medium temperature	Iron at low temperature	Do not iron	Iron without steam	
IRON	Maximum temperature	200 °C 392 °F	150 °C 302 °F	110 °C 230 °F			

4.1 First Use

•When operating your dryer for the first time check inside the drum for any foreign objects.
•Partly load the drum with wet clothes and let the dryer run for approximately 15 minutes. This operation will clean the drum before loading garments.
•You may smell an unpleasant odor and excessive fiber/lint may accumulate during the first drying cycle.

4.2 Garments suitable for drying

Always follow the advice on garment labels. Dry only laundry having a label stating that they are suitable for tumble-drying.

4.3 Garments unsuitable for drying

•Items with metal attachments like, belt buckles and metal buttons can damage your dryer.
•Do not dry items like woolens, silk garments and nylon stockings, delicate embroidered fabrics, garments with metal accessories and items like sleeping bags in the dryer.
•Garments made of delicate and valuable fabrics as well as lace curtains can be permanently wrinkled. Do not dry these in your dryer!
•Do not dry items made of hermetic fibers such as pillows and quilts in the dryer.
•Garments made of foam or rubber may deform.
•Do not dry clothes containing rubber in the dryer.
•Do not dry clothes exposed to petroleum, oil, combustible or explosive agents in the dryer even if they are washed beforehand.
•Overly wet laundry or laundry with dripping water must not be put into the dryer.

4.4 Preparing clothes to be dried

•All laundry must be spun at the highest possible spin speed the washer allows for the textile type.
•Laundry may be tangled after washing. Separate laundry before placing them into your dryer.
•Sort laundry according to their types and thicknesses. Dry similar types of laundry together.

4.5 Correct load capacity

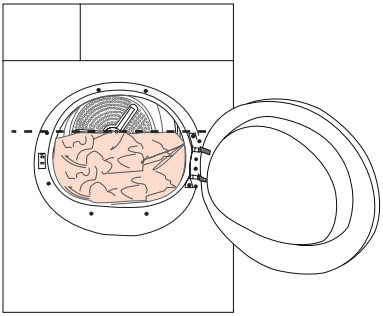

	Please consult the information in the “Program Selection” section.
	Adding laundry to the dryer over the level shown in the figure is not recommended. Drying performance will be reduced when the dryer is overloaded. Doing so may damage your dryer and your clothes.

	Place garments into the drum loosely so they won’t get tangled.
	Large items (e.g. bed sheets, quilt covers, large tablecloths) may bunch-up. Stop the dryer 1 or 2 times during drying process to separate any bunched-up laundry.

The following weights are given as examples.

Home articles	Weight (g)*	Weight (lb)*
Cotton quit covers (double)	1500	3 ¼
Cotton quit covers (single)	1000	2 ¼
Bed sheets (double)	500	1 1/8
Bed sheets (single)	350	¾
Large tablecloths	700	1 ½
Small tablecloths	250	½
Tea napkins	100	¼
Bath towels	700	1 ½
Hand towels	350	¾
Garments	**Weight (g)***	**Weight (lb)***
Blouses	150	3/8
Cotton shirts	300	5/8
Shirts	200	½
Cotton dresses	500	1 1/8
Dresses	350	¾
Jeans	700	1 ½
Handkerchiefs (10 pieces)	100	¼
T-Shirts	125	¼

*Dry laundry weight before washing. Approximate weights of average home laundry type.

5 Running the product

5.1 Control Panel

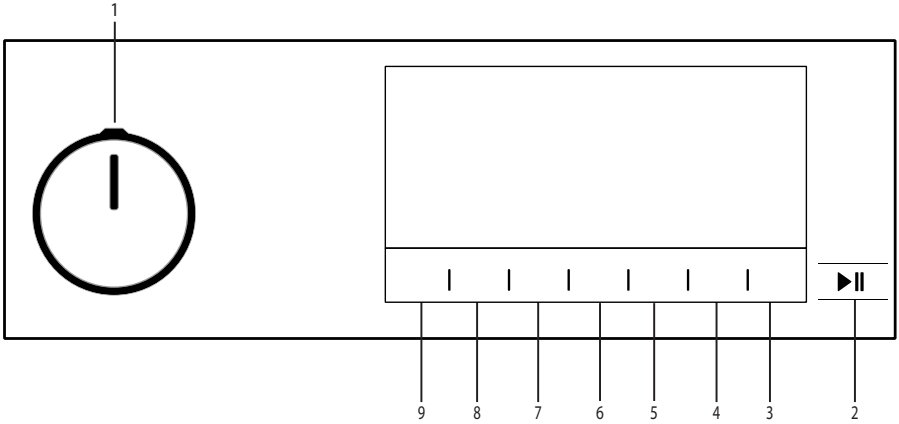

1. On/Off/Program Selection button.
2. Start / Stand-by button.
3. Remote control selection button.
4. End time selection button.
5. Time program selection button.
6. Low temperature selection button.
7. Audible warning and child lock selection button.
8. Anti Creasing selection button.
9. Dryness level selection button.

5.2 Symbols

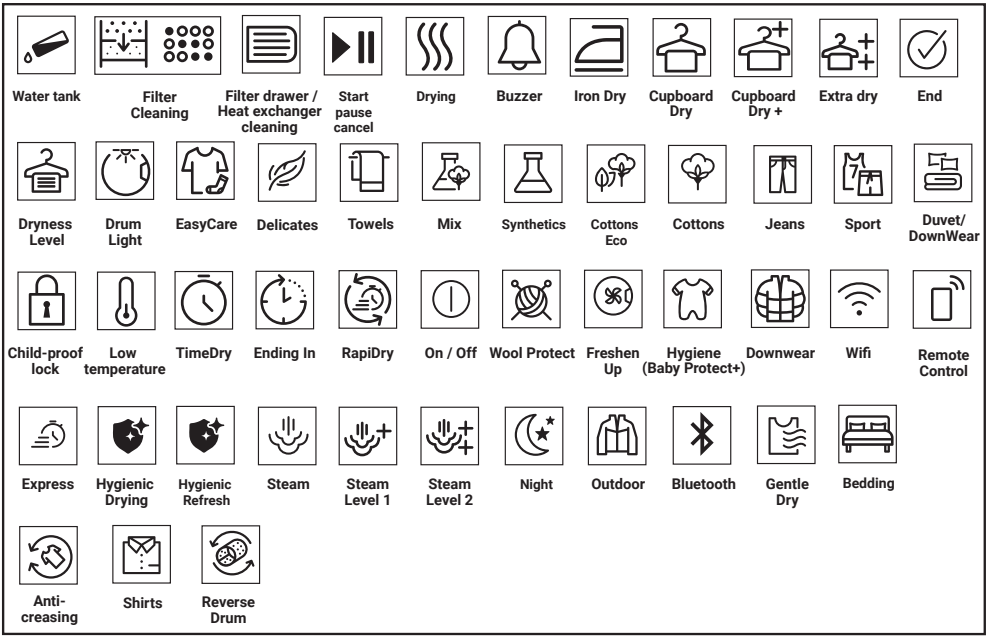

5.3. Preparation of drying machine

- Plug the drying machine.
- Open the loading door.
- Place the laundry to the drying machine without jamming them.
- Push and close the loading door.

WARNING !

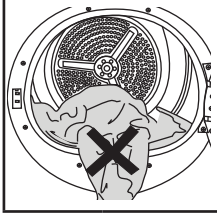

- Ensure that no laundry is jammed to the loading door.

- Select the desired program by using On/Off/Program Selection button, the machine will turn on.

NOTE!

- Selecting the program with the On/Off/ Program Selection button does not mean that the program started. Press Start / Stand-by button to start the program.

5.4 Program selection and consumption chart

5.5 Auxiliary functions

EN				
Programmes	Programme Description	Capacity (kg)	Spin speed in washing machine (rpm)	Drying Time (minutes)
Cottons	You can dry your heat-resistant cotton textiles with this programme. A drying setting suitable for the thickness of the products to be dried and the desired level of dryness should be selected.	8	1000	165
Cottons Eco	It dries single layer, casual cotton textiles in the most economical way.	8	1000	150
Sports Wear	Use it to dry your clothes made of synthetics, cotton or mixed fabrics or waterproof products such as functional jacket, raincoat etc. Turn them inside out prior to drying.	2	1000	75
Mixed Fabric	Use this programme to dry non-pigmenting synthetic and cotton laundry items together. Sports and fitness clothes may be dried with this program.	4	1000	90
Towel	Drying towels such as kitchen towel, bath towel and hand towel.	5	1000	105
Delicates	You may dry your delicate laundry or laundry with hand wash symbol (silk blouses, thin underwear, etc.) at low temperature in this program.	2	1200	40
Timed Dry	You may select from time programmes between 10 and 160 minutes to achieve the desired drying level at low temperature. In this programme, tumble drier's operation lasts for the set time independently from the dryness of laundry.	-	-	-
Sanitize	It is the programme that you can dry your washed products you want to provide with extra hygiene (baby clothes, underwear, towels, etc.). It provides high hygiene for your textiles via heat effect.	5	800	125
Jeans	You may dry denim pants, skirts, shirts or jackets in this program.	4	1200	85
Quick Dry	You can use this program to dry your cotton laundry that you have spun at high speeds in your washing machine.	0,5	1200	45
Air Fluff	It only ventilates for 10-160 minutes without giving hot air. You can ventilate the cotton and linen clothes that have been enclosed for a long time with this program to remove their odour.	-	-	10
Shirts	It dries the shirts in a more sensitive manner, and causes less creasing and easier ironing.	1,5	1200	30

Shirts Quick	Use this program to have 2 shirts ready for ironing.	0,5	1200	15
Bedding	Dry 1 cotton or synthetic duvet cover set by closing the button / zipper.	-	800	55
Download Cycle				
Freshen up	It only ventilates for 10-160 minutes without giving hot air. You can ventilate the cotton and linen clothes that have been enclosed for a long time with this program to remove their odour.	-	-	10
Wool Refresh	Use this programme to ventilate and soften the woolen laundry that can be washed in the washing machine. Do not use to dry the laundry completely. Take out and ventilate the laundry immediately after the programme is over.	-	800	20
Underwear	It provides hygienic drying for your underwear via high temperature.	2	1000	95
Daily	You can dry both cotton and synthetic laundry with this programme.Sports and fitness clothes may be dried with this program.	4	1000	85

Drying level

Super	Use for heavy-duty fabrics in to be very dry
Extra	Use for extra drying
Normal	Use for a normal dryness level. It is recommended level for a energy saving.
Damp	Items can be partially damp

Dryness level

Dryness level button is used for adjusting to desired dryness. Program time may change depending on the selection.

NOTE!

- You can activate this function only prior to start of program.

Anti Creasing

If you will not take the laundry out immediately after the program has finished, you may use Anti Creasing function to prevent wrinkling of your laundry. This function is disabled by default and can be enabled by pressing drum light button for 3 seconds.

Audible warning

Drying machine makes an audible warning when the program is completed. Press the “Audible Warning” button if you do not want audible warning. When you press the audible warning button, the light goes off and it does not sound when the program is completed.

NOTE!

- You can select this function before the program starts or after the program starts.

Low temperature

You can activate this function only prior to start of a program. You can activate this function if you want to dry your laundry at a lower temperature. The program duration will be longer after it becomes activated.

End time

You can delay the end time of the program up to 24 hours with end time function.

1.Open the loading door and place the laundry.

2.Select the drying program.

3.Press the End Time selection button and set the delay time you wish. End Time LED turns on. (When pressed and hold the button, End Time proceeds non-stop).

4.Press the Start / Stand-by button. End Time countdown begins. The “:” sign in the middle of displayed delay time flashes.

NOTE!

- You can add or remove laundry within end time. Displayed time is the sum of normal drying time and end time. End Time LED turns off at the end of countdown, the drying starts and the drying LED turns on.

Changing the end time

If you want to change the duration during the countdown:

Pause the program and Turn the On/Off/ Program Selection button and cancel the program. Select the desired program and repeat the End Time selection.

Cancelling the end time function

If you want to cancel the end time countdown and start the program immediately:

Pause the program and Turn the On/Off/ Program Selection button and cancel the program. Select the desired program and press the “Start/Pause” button.

Drum Light

You can turn on and off the drum light by pressing this button. The light turns on when the button is pressed and turns off after certain time.

5.6 Warning indicators

NOTE!

- Warning indicators may vary depending on the model of your drying machine.

Filter cleaning

When the program is completed, the warning indicator for filter cleaning turns on.

5.7 Starting the program

Press the Start/Stand-by button to start the program.
Start/Stand-by and Drying indicators turn on to show that program started.

5.8 Child Lock

The drying machine has a child lock which prevents the program flow from being interrupted when the buttons are pressed during a program. When the Child Lock is activated, all buttons on the panel except the On/Off/ Program Selection button are deactivated. Press the Audible Warning button for 3 seconds in order to activate the child lock.
The child lock has to be deactivated to be able to start a new program after the current program is finished or to be able to interfere with the program. To deactivate the child lock, keep the same buttons pressed for 3 seconds.

NOTE!

- When the child lock is activated, the child lock warning indicator on the screen turns on.

When the child lock is active:
The drying machine runs, or in stand-by state the indicator symbols will not change upon changing the position of the program selection button.

NOTE!

- When the drying machine is operating and the child lock is activated, double beep sound is heard when the program selector switch is turned. If the child lock is cancelled without turning the program selector button back to its original position, the program is terminated since the program selector button is turned.

5.9 Changing the program after it is started

You can change the program you selected to dry your laundry with a different program after the drying machine starts running.

- For example, Pause the program and turn the On/Off/Program Selection button to select the Extra Dry program in order to select the Extra Dry program instead of Ironing Dryness.
- Press the Start/Stand-by button to start the program.

Adding and removing clothes during stand-by
If you want to add or remove clothes to/from the drying machine after the drying program starts:

- Press the Start/Stand-by button to put the drying machine in Stand-by state. The drying operation stops.
- Open the loading door while in Stand-by state, and close the door after you remove or add laundry.
- Press the Start/Stand-by button to start the program.

NOTE!

- Adding laundry after the drying operation starts may cause the dried laundry inside the drying machine to mix with wet laundry and leave the laundry damp at the end of operation.
- Adding or removing laundry during drying may be repeated as many times as you wish. But this operation continuously interrupts the drying operation, and thus increases program duration and energy consumption. So, it is recommended to add laundry before the program starts.
- If a new program is selected by turning the program selection button while the drying machine is in stand-by, the running program terminates.

WARNING !

- Do not touch the inner surface of the drum while adding or removing clothes during a continuing program. The drum surface is hot.

5.10 Cancelling the program

If you want to cancel the program and terminate the drying operation for any reason after the drying machine starts running, Pause the program and turn the On/Off/Program Selection button; the program terminates.

WARNING !

- The inside of the drying machine shall be extremely hot when you cancel the program during machine operation, so run the refreshing program to allow it to cool down.

5.11 End of program

When the program ends, the LED's of End/ Anti Creasing and Fibre Filter Cleaning Warning on the program follow-up indicator turn on. Loading door can be opened and drying machine is ready for another operation. Turn the On/Off/Program Selection button to On/Off position in order to turn off the drying machine.

NOTE!

- If the Anti Creasing mode is active and the laundry is not removed after the program is completed, the Anti Creasing function activates for 2 hours to prevent the laundry inside the machine to get wrinkled. The program tumbles the laundry with 10-minute intervals to prevent them from wrinkling.

5.12 Odour feature

If your drying machine has odour feature, read the ProScent manual to use this feature.

5.13 HomeWhiz Function

Firstly, the HomeWhiz application should be installed on your phone.
The detailed information regarding the HomeWhiz application is available on https://www.homewhiz.com/
Turn on the Bluetooth on your phone.
Switch the unit to Off mode using the program selection button.
Perform the following actions using the application on your mobile device.
Devices->Add Device->Cleaning Devices->Dryer
Scan or type the product barcode into the app.
Continue with the installation according to the instructions of the app on your mobile device.
Press the "Dryness level" and "Remote control" buttons on your device simultaneously for 3 seconds according to the app instructions.
The screen displays 3-2-1 and the following image appears.

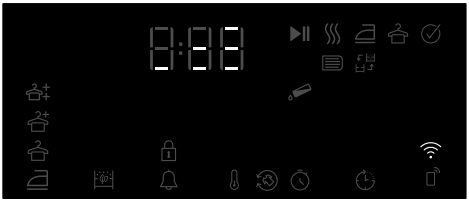

The product screen is closed after the installation is completed and in the application, it is asked to select the room where the product will be added.

Using the remote connection:

Switch the product to Download programme mode. If the Wi-Fi is connected, the icon flashes.
If the Wi-Fi is disconnected, the icon does not flash. Press the remote control button for 3 seconds to turn it on.
Press the remote control button to allow remote control to the product while the Wi-Fi is turned on.

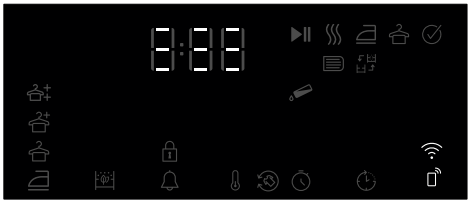

When the remote control is turned on, the unit can be controlled remotely using the HomeWhiz app.
The detailed information regarding the HomeWhiz application is available on https://www.homewhiz.com/

Deleting the product from network:

Pressing and holding simultaneously Delay and Wi-Fi buttons for 5 seconds while the product is turned on, it counts down from 5 to appear on the screen. when the beep is heard, the product is deleted from network and the Wifi is turned off.

WARNING !

- When the door is opened, the remote control turns off.
- When the programme button is turned, the remote control turns off.
- If the WIFI icon is illuminated continuously, it means that it is active and connected to network
- If the WIFI icon is flashing continuously, it means that it is active and trying to connect to network. You cannot connect to the product unless it is illuminated continuously.
- The connection to the product is allowed if the remote control icon is active and the WIFI icon is illuminated continuously.

Getting the HomeWhiz Application

You can get the HomeWhiz application from the application stores. You can use the below QR codes to access the applications faster.

Apple App Store for the devices with IOS operating system

Google Play Store for the devices with Android operating system

6 Technical Specifications

Model	Vented Dryer with electronic sensor control
Height (in)	33.7
Witdth (in)	23.54
Depth (in)	23.46
Height adjustment of feet (in)	5 1/5
Net weight (plastic front door usage) (lbs)	69,7
Voltage / Frequency	208-240V ~ 6 0 Hz
Connected load	2000-2400 W
Dry Load Capacity	8kg / 17,6 lb
Capacity	3,80 cu-ft

7 User maintenance and cleaning instructions

7.1 Lint filter

Lint and fibers released from the laundry in to the air during the drying cycle are collected in the “Lint Filter”.

	Fibres and lint are formed during wearing and washing.
	WARNING: Always clean the filter after each drying cycle.

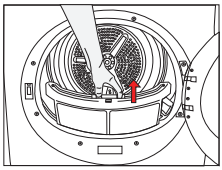

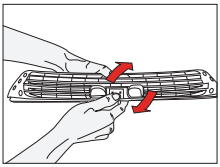

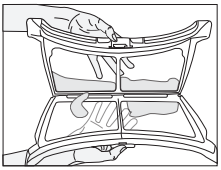

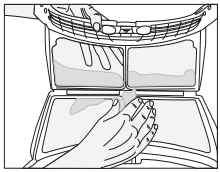

To clean the Filter;
1. Open loading door.
2. Remove the lint filter by pulling it up and open the filter.
3. Clean lint, fiber, and by hand or with a soft piece of cloth.
4. Close the filter and put it back in place.

	You can clean the filter and filter area with a vacuum cleaner.
	Clogging may arise on the filter surface after using your dryer for some time; if this occurs, wash the filter with water and dry it before using again.

7.2 Sensor

There are humidity sensors in your dryer that detect whether the laundry is dry or not.
For sensor cleaning;
1. Open loading door.
2. Allow dryer to cool off if drying has been done recently.
3. Wipe the metal sensors with a soft cloth dampened with vinegar and dry the sensors afterwards.

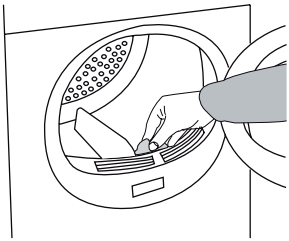

	Clean the metal sensors at regular intervals (4 times a year).
	WARNING: Never use solvents, cleaning agents or similar substances when cleaning as these might cause fire and/or an explosion!

8 Troubleshooting

Problem	Cause	Explanation / Solution
Drying process takes too long.	*Lint filter may not have been cleaned.	* Clean the lint filter. * Meshes of the filter may be clogged. Wash with water.
	*Ventilation grids on the front side of the machine are blocked.	*Remove the objects (if any) that block ventilation in front of the ventilation grids.
	*Ventilation is not sufficient since the room where the machine is installed is very small.	*Open the door and window of the room to avoid the room temperature increase too much.
	*Lime deposit has built up on the dampness sensor	*Clean the dampness sensor.
	*Excessive laundry is loaded.	*Do not load the dryer in excess.
	*Laundry is not spun sufficiently	*Spin your laundry at a higher speed in your washing machine.
Dryer does not switch on or the program does not start. Dryer does not start when set.	* It may not plugged in. * The loading door may be ajar. * Program may not be set or the “Start/Pause/Cancel” button may not have been pressed. * “Childproof lock” may be activated.	* Make sure that the dryer is plugged in. * Make sure the loading door is properly closed. * Make sure the program has been set and it is not in “Pause” mode. * Deactivate the childproof lock.
Program is interrupted for no reason.	* The loading door may be ajar. * Electricity may be cut off.	* Make sure the loading door is properly closed. * Press the “Start/Pause/Cancel” button to start the program.
Laundry has shrunk, become felted or has deteriorated.	* A program not suitable for the laundry type might have been used.	* Dry only the laundry which is suitable for drying in the dryer. First check the labels on the clothes. * Select a program a suitable low temperature setting for the laundry type to dry the clothes.
“End / Anticrease” LED flashes.	* The 2-hour anti creasing program to prevent laundry from wrinkling may have been activated.	* Turn off the dryer and take the laundry out of the dryer.
“End / Anticrease” LED is on.	* Program has come to an end.	* Turn off the dryerand take the laundry out of the dryer.
“Filter cleaning” LED flashes.	* Lint filter may not have been cleaned.	* Clean the lint filter. * Meshes of the filter may be clogged. Wash with water.
The “Drying” LED flashes.	* A heat sensor failure has occurred. dryer ends the program without heating.	* Turn off the dryer and remove the laundry. Call the authorized service.

NOTE: Call an authorized service if the problem persists.

WARRANTY STATEMENT FOR THE BLOMBERG DRYERS

The warranties provided by Blomberg in these statements only apply to Blomberg dryers sold to the original purchaser or homeowner in the US and Canada. The warranty is not transferable. To obtain warranty service, please contact our nearest distributor as listed by state. You will need your dryer model number, serial number, retailer name and address, where purchased and purchase date / installation date. This warranty gives you specific legal rights, and you may also have other rights, which vary from state to state.

1 year *++ limited warranty from date of first installation Blomberg will repair or replace at no cost to the consumer any defective parts of the dryer if used under normal household conditions (warranty is void if the product is used commercially e.g., bed + breakfast, nursing home etc.). Service must also be performed by an authorized Blomberg service agency. (Cosmetic defects must be reported within 10 business days from installation)
The accessories have 1 year warranty but not labor. Consumer is responsible for labor to install accessory.

2 year * ++ limited warranty from date of first installation (Parts only) Blomberg will repair or replace any parts at no cost to the consumer if material defects or workmanship have caused the damage or failure of these components. Again the dryer must have been used under normal household conditions and not commercially as stated above (Labor charges are the responsibility of the consumer).

5 year * ++ limited warranty from date of first installation (parts only 2-5 years) Blomberg will repair or replace any circuit boards or dryer drum (excluding any plastic attachments) at no cost to the consumer if material defects or workmanship have caused the damage or failure of these components. The dryer must have been used under normal household conditions and not commercially (Labor charges are the responsibility of the consumer).

Lifetime limited warranty from date of first installation *++ (parts only) Blomberg will repair or replace to the original owner the stainless steel drum if rust through occurs under normal household use. Blomberg may,at its option, also replace the whole dryer with the same and/or equivalent model with equal or better functionality if the original model is no longer available. (Labor, removal and installation charges are the responsibility of the consumer.)

This product is fully tested and went through official quality assurance inspections before leaving the original manufacturing site. Warranty terms for this Blomberg household appliance is not valid if the product is altered, tampered, modifed, additional parts assembled, fixed and re-packed by an authorized distributor, servicer, a third party retailer, reseller or by any other unauthorized person(s)

Disclaimers of warranties and exclusions:

Warranty does not cover service costs by an authorized service agent to correct installation, electrical and plumbing problems or educational instruction on the use of the dryer. The warranty also does not cover defects or damage caused by an act of god (such as storms, floods, fires, mudslides, etc.), damage caused by use of the dryer for purposes other than those for which it was designed, misuse, abuse, accident, alteration, improper installation, maintenance, travel fees, service calls outside normal service hours, unauthorized service work or servicers.

TO THE EXTENT PERMITTED BY LAW, THIS WARRANTY IS IN LIEU OF ALL OTHER EXPRESSED AND IMPLIED WARRANTIES, INCLUDING THE IMPLIED WARRANTIES OF MERCHANTABILITY AND FITNESS FOR A PARTICULAR PURPOSE. BLOMBERG UNDERTAKES NO RESPONSIBILITY FOR THE QUALITY OF THIS PRODUCT EXCEPT AS OTHERWISE PROVIDED IN THIS WARRANTY STATEMENT. BLOMBERG ASSUMES NO RESPONSIBILITY THAT THE PRODUCT WILL BE FIT FOR ANY PARTICULAR PURPOSE FOR WHICH YOU MAY BE BUYING THIS PRODUCT, EXCEPT AS OTHERWISE PROVIDED IN THIS WARRANTY STATEMENT.

Blomberg does not assume any responsibility for incidental or consequential damages. Such damages include, but are not limited to, loss of profits, loss of savings or revenue, loss of use of the dryer or any associated equipment, cost of capital, cost of any substitute equipment, facilities or services, downtime, the claims of third parties, and injury to property. Some states do not allow the exclusion or limitation of incidental or consequential damages, so the above limitations or exclusion may not apply to you.

* Installation date shall refer to either purchase date or 5 business days after delivery of the product to the home, whichever is later.

++ Parts replaced will assume the identity of the original parts + their original warranty.

There are No Other Warranties. This Warranty Statement is the complete and exclusive warranty from the manufacturer. No employee of Blomberg or any other party is authorized to make any warranty statements in addition to those made in this Warranty Statement.

HOW TO GET SERVICE

Please contact the Distributor for your State or Province as listed on the Distributor Contact List, or call our Toll Free Number at 1 800 459 9848 for direction to an Authorized Blomberg Service Agent or contact via http://www.blombergappliances.com