Item: 61336

TDR
INNOVATIVE LEGACY

Ages: 14+

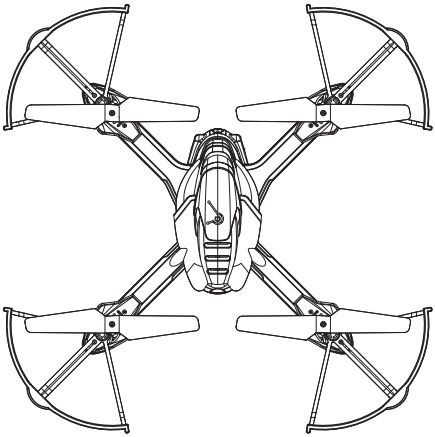

Phoenix

INTERCHANGEABLE MODULAR DRONE

Instruction Guide

Keep the Instruction Guide for future reference. Do not discard.

CONTENTS LIST

1x Phoenix

4x Blade Guard

4x Blade

1x Screw Driver

1x USB Charging Cable

1x Controller

1x Camera

1x Battery

1 x Obstacle Avoidance Module

For questions or difficulties operating your TDR devices, please contact:
service@tenergy.com

DISCLAIMER

Read this disclaimer and instructions thoroughly before operating this device. THE USE OF THIS PRODUCT IS A SIGN OF YOUR COMPLIANCE WITH THIS DISCLAIMER. You are responsible for your own actions, behavior, and conduct while using this device. You agree to use this product in such a way that you will comply with all local and federal regulations, including, but not limited to, personal privacy laws. Tenergy Corporation will not be held liable for any damages or legal responsibilities resulting from the use of this product. This product is NOT suitable for anyone under the age of 14. For more information and guidance, please visit www.TDRWorld.com

Safety guidelines for sUAS recreational users

- Follow community-based safety guidelines, as developed by organizations such as the Academy of Model Aeronautics (AMA).
- Fly no higher than 400 feet and remain below any surrounding obstacles when possible.
- Keep your sUAS in eyesight at all times, and use an observer to assist if needed.
- Remain well clear of and do not interfere with manned aircraft operations, and you must see and avoid other aircraft and obstacles at all times.
- Do not intentionally fly over unprotected persons or moving vehicles, and remain at least 25 feet away from individuals and vulnerable property.
- Contact the airport and control tower before flying within five miles of an airport or heliport.
- Do not fly in adverse weather conditions such as in high winds or reduced visibility.
- Do not fly under the influence of alcohol or drugs.
- Ensure the operating environment is safe and that the operator is competent and proficient in the operation of the sUAS.
- Do not fly near or over sensitive infrastructure or property such as power stations, water treatment facilities, correctional facilities, heavily traveled roadways, government facilities, etc.
- Check and follow all local laws and ordinances before flying over private property.
- Do not conduct surveillance or photograph persons in areas where there is an expectation of privacy without the individual's permission (see AMA's privacy policy).
- Before each flight, check and ensure the drone and controller are not damaged, and that all components are working in accordance with the user instruction .
- If you want to use unmanned aircraft systems for a commercial purpose: you can apply for an exemption from the FAA to operate commercially. For more information about how to apply for an exemption, visit the FAA's "Section 333".

FLY RESPONSIBLY

The Federal Aviation Administration requires registration of many drones flown in the US, for hobby or commercial purposes. To learn more about drone registration requirements, visit "Know Before You Fly" at:

www.knowbeforeyoufly.org

The crossed-out dust bin symbol indicates that batteries (primary, rechargeable, button cells, packs, etc) must not be put in household waste. These items may be composed of hazardous materials.
Please help protect the environment from health risks by disposing of the batteries properly, and taking them to a local collecting facility for safe recycling.

Waste Electrical and Electronic Equipment (WEEE)
When this appliance is out of use, please remove all batteries and dispose of them separately. Bring electrical appliances to the local collecting points for waste electrical and electronic equipment. Other components can be disposed of in domestic refuse.

This product is in compliance with the essential requirements and other relevant provisions of Directive 1999/5/EC.

FCC Statements

This device complies with Part 15 of the FCC Rules. Operation is subject to the following two conditions:
1. This device may not cause harmful interference.
2. This device must accept any interference received, including interference that may cause undesired operation.
Note: This equipment has been tested and found to comply with the limits for a Class B digital device, pursuant to Part 15 of the FCC Rules. These limits are designed to provide reasonable protection against harmful interference in a residential installation. This equipment generates, uses and can radiate radio frequency energy and, if not installed and used in accordance with the instructions, may cause harmful interference to radio communications. However, there is no guarantee that interference will not occur in a particular installation. If this equipment does cause harmful interference to radio or television reception, which can be determined by turning the equipment off and on, the user is encouraged to try to correct the interference by one or more of the following measures:
- Reorient or relocate the receiving antenna.
-Increase the separation between the equipment and receiver.
-Connect the equipment into an outlet on a circuit different from that to which the receiver is connected.
-Consult the dealer or an experienced radio/television technician for help.

ADULT SUPERVISION REQUIRED
An adult should check the unit and LiPo battery for damages prior to each use. Drones have rotating blades that move at high speeds, posing a danger of damage and injury. Pilots are responsible for any action that results in damages or injury from improper operation of the drone. Adequate flying space is required. Avoid flying near interior fans and/or vents as they may affect your ability to control the drone. Keep a safe distance from streets, public thoroughfares, and power lines. Never attempt to retrieve the drone from any location higher than your reach (rooftops, trees, etc) or any location that poses a safety hazard. Never fly the drone at night. Keep drone in sight at all times during operation. Discontinue operation immediately if the drone flies out of your field of view. Do not fly near spectators. Keep away from pets, as they may become excited over R/C vehicles. Keep spinning rotors away from fingers, hair, eyes, and other body parts. Always launch from a flat surface. Never leave Drone unattended while it is turned on. Read all enclosed information before operating.

LITHIUM BATTERY CAUTIONS
LiPo batteries pose a serious hazard when used improperly and may result in overheating, fire, or explosions. Read all precautions and instructions regarding the care and use of LiPo batteries prior to use. The enclosed LiPo battery is to be used only with the vehicle and charger included in this package.
- Keep away from flammable materials
- Do not expose to direct sunlight
- Do not expose to extreme heat
- Do not drop or make subject to strong impact
- Keep dry and away from moisture
- Remove exhausted batteries as soon as possible and discard properly
- Remove all batteries when toy is inactive for long periods
- The supply terminals are not to be short circuited

LiPo Battery Disposal: LiPo batteries must be recycled and disposed of properly. LiPo batteries should not be disposed of with household waste. **Check your local laws and regulations for information on proper battery disposal. If you are unable to identify the applicable rules in your area, please reference the instructions of the battery manufacturer.**

WARNING: Batteries are harmful if swallowed. Please keep away from children.

Product Features

Advance auto-hovering, auto-launch & auto-return technologies

Obstacle avoidance flight technologies

Modular design for easy upgrades and maintenance

6-axis Flight Control System

WiFi real-time video streaming

0.3MP WiFi camera

Advance headless flight mode

4-way 360^{0} stunt rolls (left, right, forward, backward)

Capable of outdoor flight

Diagrams

1. Blade Guard
2. Propeller
3. Power Button
   - Power On: Long press
   - Power Off: Long press again
4. Camera Module
5. Motor
6. Battery
7. Obstacle Avoidance Module
8. Landing Gear

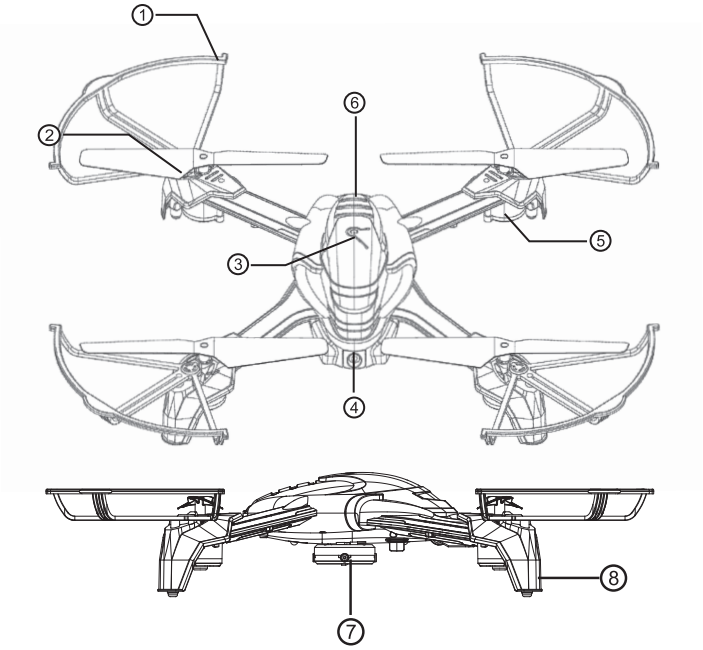

Controller

1. Charging Indicator
2. Throttle/Rudder Stick
3. Left/Right Turning Trimmer
4. Power Switch
5. Camera Lens Up
6. Camera Lens Down
7. 360° Roll
8. Charging Port
9. Headless On/Off
10. LED On/Off (drone)
11. Backward Trimmer
12. Forward Trimmer
13. Left/Right Side-Fly Trimmer
14. Elevator/Aileron (Direction) Stick
15. Power Indicator
16. Auto Takeoff / Auto Landing
17. Speed/Sensitivity Switch
18. Photo: Short Press
    Video: Long Press
19. Auto Return

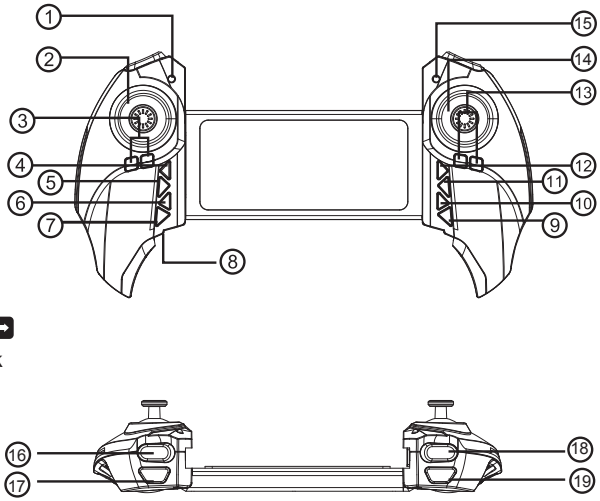

Charging and installing battery for the drone

1. Power off the drone, press the battery release button, take out the battery.
2. Connect the USB Charging Cable to the battery.
3. Connect the USB Charging Cable to a USB power source *(e.g.: USB adapter, USB port on a computer)* to start charging the battery. The red charging light on the USB Charging Cable will turn on when charging is complete.
4. Insert the battery in to the drone after battery is fully charged.

Charging time: approximately 90 minutes.
Flying time: approximately 7 minutes.

Cautions:

Always unplug/remove LiPo battery when not in use.
Cool down battery after use to room temperature before charging.
Charge battery in an isolated area.
Never leave battery unattended while charging.
If battery swells, unplug it immediately. Do not use it again.
Do not modify, heat up or get the battery wet.
Charge the battery with the provided charger only.

Charging the controller

1. Turn off the controller, connect the USB Charging Cable to the charging port of controller.
2. Connect the USB Charging cable to a USB power source *(e.g.: USB adapter, USB port on a computer)* to start charging the battery. The red charging light will turn on when charging is complete.

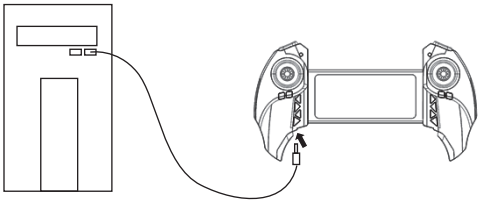

Charging time: approximately 60 minutes.
Run time: approximately 60 minutes.

Accessories installation

Obstacle Avoidance Module installation

1. Match the Obstacle Avoidance Module with the socket at the bottom of the drone.
2. Push the Obstacle Avoidance Module according to the direction shown on the module to mount.

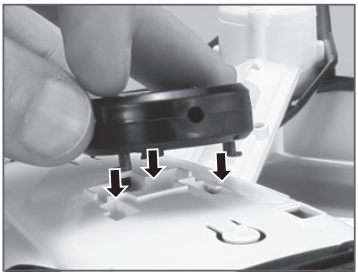

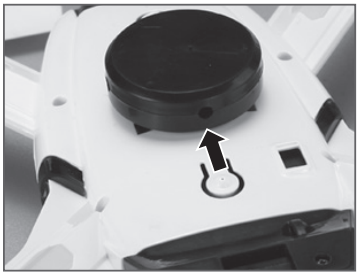

Camera Module installation

1. Push the Camera Moduel all the way into the socket at the bottom of the drone.
2. Clip the antenna onto the antenna holder.

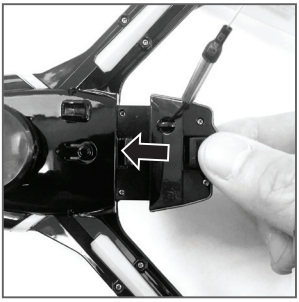

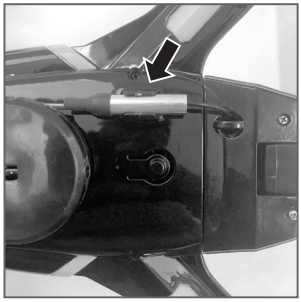

Blade Guard installation

1. Take out the screw on the main axis bar with the provided screw driver.
2. Insert the Blade Guard with the main axis bar.
3. Use screwdriver to tighten the screw.

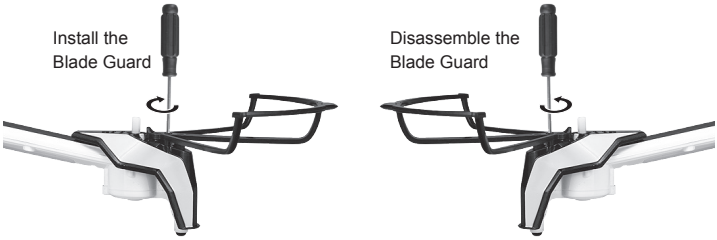

NOTE: Check the Blade Guard every time the drone crashes. Replace the Blade Guard right away if it is broken.

Binding drone to the controller

1. Power on the drone unit and place on level surface, the LED on drone will flash continuesly.
2. Turn on the controller.
3. Push the Throttle Stick to the up position, the LED light on the drone will change from flashing to solid on after binding has been successful.

Step 1

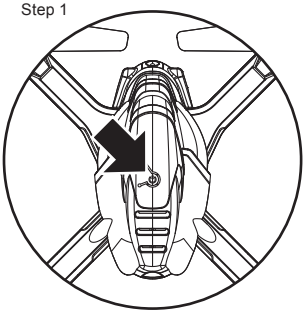

Step 2

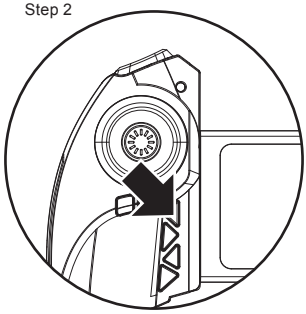

Step 3

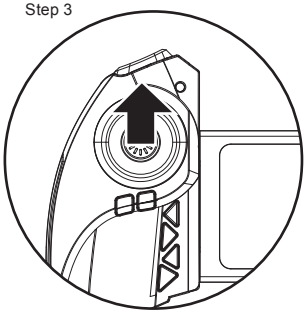

Start / Stop the motors

Start the motors (Takeoff):

Press the Auto Takeoff button, the blades will start to spin. You can now push the Throttle Stick up slightly to takeoff.

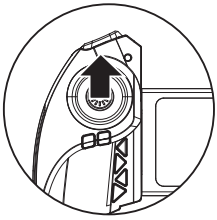

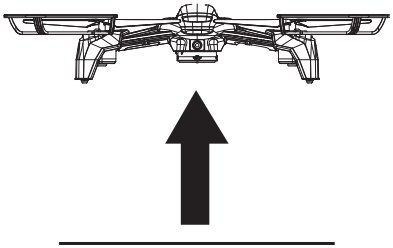

Stop the motors (Landing):

Press the Auto Takeoff button during the flight, the drone will automatically land. Blades will stop spinning after landing.

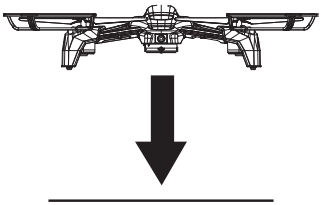

Basic operation controls

Basic operation:

Left stick controls altitude and direction.

Right stick controls the rotation forward, backward, left or right movement.

Left Stick	Right Stick
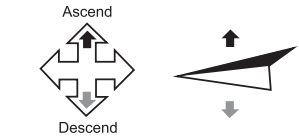	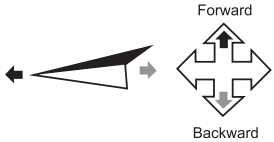
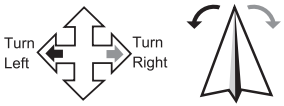	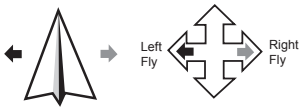

Backward Trimmer	Forward Trimmer
	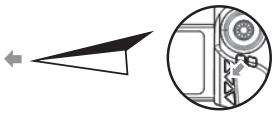
Left/Right Turning Trimmer	**Left/Right Side-Fly Trimmer**
	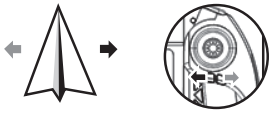

Camera Lens Up/Down	LED Light Control
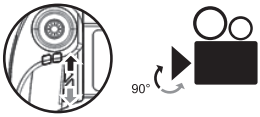	

Photo Taking	Video Taking
Short press the button to take a photo.	Long press the button to shoot a video.

Special operation controls

Obstacle Avoidance Module

Mount the Obstacle Avoidance Module to the bottom of the drone. When it detects obstacles within 2~3ft (depend on environment/object), the drone will stop approaching and avoid the obstacle automatically. This feature will work automatically when it is flying at least 3ft above the ground. This feature will reduce the chance of crashing.

Caution: Please do NOT test this feature on people.

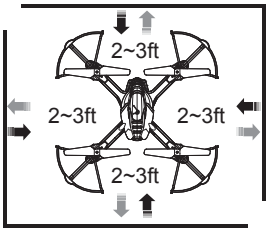

Auto Hover

Push the Throttle Stick up slightly and release it, the drone will stay at a specific height steadily. Pull the Throttle Stick down to descent the drone.

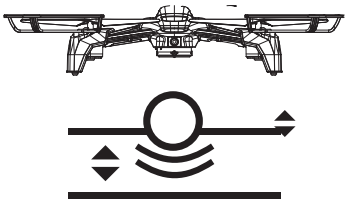

360° Roll

1. Bring the drone to a mid-air hover, without flying towards any direction. Remove finger from the direction (Elevator/Aileron) stick once in hover.
2. While hovering, press the 360° Roll button. The remote will start beeping rapidly as the drone will enter rolling-ready mode.
3. While the rolling-ready move, tap the direction stick in the direction you want the drone to flip/roll.

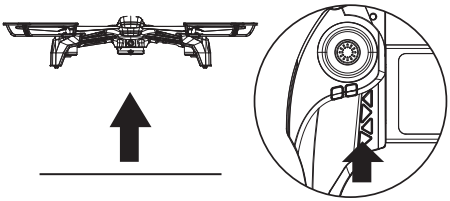

Note: The 360° roll function will not work if the drone is mounted with Obstacle Avoidance Module and Camera Module, make sure take out these two module before using this function. (Turn off the controller and drone before removing the modules.)
The 360° roll function can not be used when battery power is low.

Special operation controls

Speed/Sensitivity Selection

The drone's flying speed and sensitivity can be adjusted by pressing the Speed Selection Button. Pressing the button will switch the speed in the following speed setting:

Low > Medium > High > Low

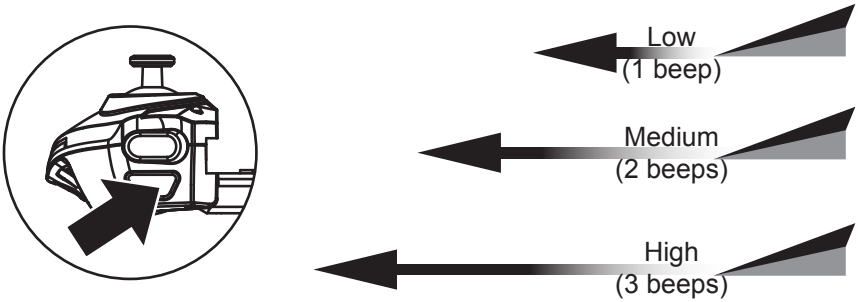

Tip: It is best to start flying in default low speed setting until you are comfortable to the flying speed. Flying speed/sensitivity setting can be adjusted before or during flight. Each time the drone starts, the flying speed will be reset to default (low speed) setting..

Headless Mode

In headless mode, drone flies from your viewpoint no matter which direction the drone is flying. E.g.: if you push the controller to left the drone will fly to left, from your viewpoint - regardless of what direction the drone is facing/pointing. Which allows you to give up worrying about orientation of the drone altogether.

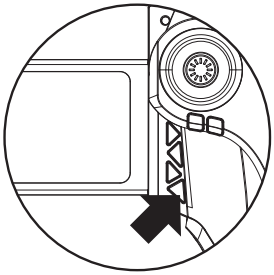

To enter headless mode:

1) Before taking off, position the drone in such a way that "its front is your front".

2) Press down the Headless Mode button (the Elevator/Aileron stick) to enter headless mode.

3) Press the button again to get out of headless mode.

Note:

- The headless mode can only be used at medium and high speed setting when Obstacle Avoidance Module is installed.
- To use headless mode at low speed setting, remove Obstacle Avoidance Module.
- The rear LED on the drone will flash continuously during headless mode.

Special operation controls

Auto Return

Press the Auto Return button during the flight, the drone will trace the shortest way flying back to the takeoff point. For best retults, align the drone body with contoller toward the same direction before/during binding.

Front: Yellow Blades

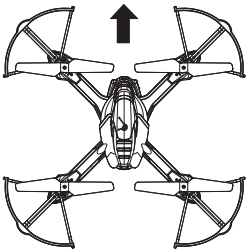

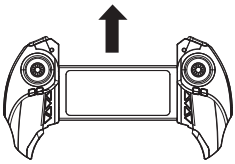

Controller and drone should face the same direction when binding

Specifications

Drone

LWH	330x330x68mm / 13x13x2.7inch
Weight	135g / 4.7oz
Operating Temperature	0°C to 40°C
Control Distance	70m / 230ft
App-control Range	35m / 115ft
FPV Transmission Range	35m / 115ft
Camera Tilting Angle	90° Degree
Battery Capacity	650mAh
Flight Time	approx. 6.5 min
Charge Time	approx. 90 min

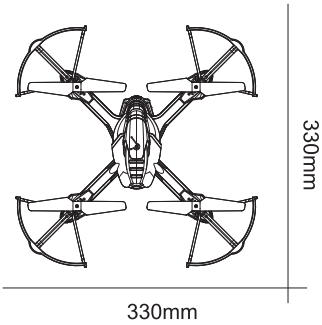

Controller

LWH	221x120x50mm / 8.7x4.7x2inch
Weight	154g / 5.4oz
Operating Temperature	0°C to 40°C
Built-in Battery Capacity	200mAh
Charging Method	USB
Run Time	approx. 60 min
Charge Time	approx. 60 min

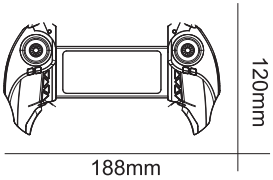

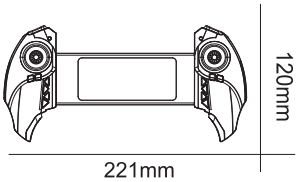

Blade installation

1. Insert the blades with the main axis bar.
2. Use screwdriver to tighten the screw.

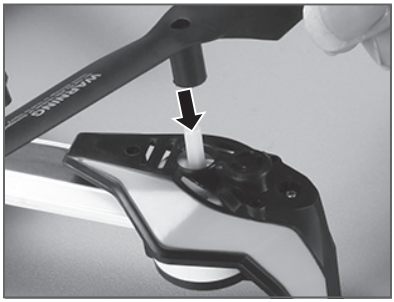

Blades must be installed as shown:
Front: use Yellow Blade A and Yellow Blade B
Rear: use Black Blade A and Black Blade B

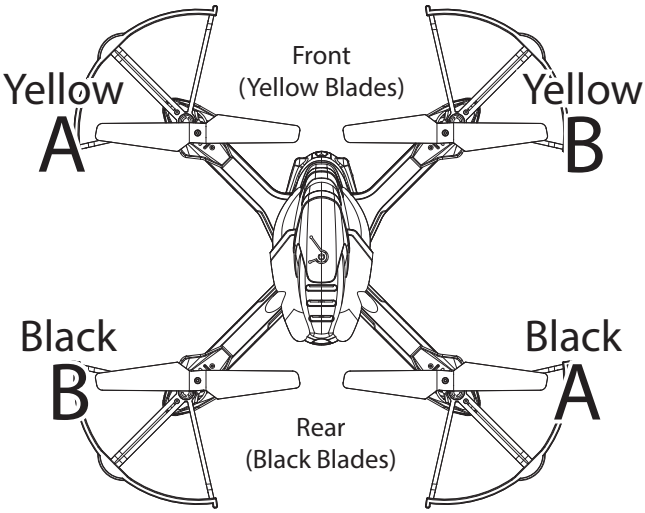

Note:
The letters A and B are printed on front side of blades.

Flying Tips

When launching the drone, face the same direction as the drone. The yellow blades should be in front.

Practice launching, hovering, and landing before attempt to learn other moves.

Flying 2 to 3 feet above the ground will reduce ground turbulence and make flying easier.

When first attempting to fly in a different direction, start by tapping the Direction Stick until you get the hang of it. Always move controls slowly until you become comfortable operating the drone.

Once you've mastered flying in different directions, practice rotational controls. Keeping the drone facing the same direction as you makes flying easier and more intuitive.

Stay 2 to 3 feet away from walls and ceilings, as the drone will be drawn towards them if you fly too close.

If the propeller blades come in contact with another object, or you crash, throttle down immediately to prevent further damage.

If anything prevents the drone's blades from spinning, or they become jammed, THROTTLE DOWN IMMEDIATELY. Do not attempt to fly until obstruction has been removed and damage fixed.

If the drone flies too far away (beyond the range of control for the remote) the drone will AUTO-LAND to prevent the drone from flying away or out of control.

Maintenance

Over time, debris such as loose hair or carpet fibers may get wound in the blades and motors. The debris should be regularly removed and cleaned to prevent buildup, and to avoid poor flying performance.

Troubleshooting

	Problem/Issue	Cause	Soluction
1	Cannot bind drone to controller	a) Battery b) Electromagnetic interference c) Out of range	a) Make sure the batteries in both drone and controller are fully charged b) Clear out objects between drone and controller c) Put drone and controller closer to each other
2	Drone does not turn on	a) Battery too low b) Battery not fully plugged in	a) Charge battery b) Battery fully plugged in the correct direction
3	Controller does not turn on	a) Switch didn't turn on b) Battery didn't install correctly c) Battery power too low	a) Ensure switch is turned on b) Ensure battery fully plugged in correctly and securely C) Charge the battery
4	Blades do not spin or drone has difficulty taking off the ground, LEDs are flashing	Battery power level is too low	Fully recharge the battery
5	Unstable drone flying / strong vibration	Damaged blade(s)	Replace the blade(s)
6	All blades spin but drone does not take off the ground or not flying properly	Blades are not installed correctly	Reinstall the blades following the "Blade Installation" section on page 13
7	Drone crashes immediately	Blades are not installed correctly	Reinstall the blades following the "Blade Installation" section on page 13
8	Drone crashes during 360° Roll	Not enough space to perform the rolling function	Ensure the drone is at least 9ft from ground and 9ft away from all other objects in all direction
9	Drone can not perform 360° Roll and LEDs are flashing	Battery power level is too low	Fully recharge the battery
10	Drone can not perform 360° Roll but LEDs are normal	Obstacle Avoidance Module is installed	Remove the Obstacle Avoidance Module

Thank You

Happy Flying