EVEN EMBERS®

Crawfish Boiling Kit

OWNER'S MANUAL

ASSEMBLY AND OPERATING INSTRUCTIONS

SAVE THIS MANUAL FOR FUTURE REFERENCE

Models GAS6290AS & GAS6250AS

THIS INSTRUCTION MANUAL CONTAINS IMPORTANT INFORMATION NECESSARY FOR THE PROPER ASSEMBLY AND SAFE USE OF THE APPLIANCE. READ AND FOLLOW ALL WARNINGS AND INSTRUCTIONS BEFORE ASSEMBLING AND USING THE APPLIANCE. FOLLOW ALL WARNINGS AND INSTRUCTIONS WHEN USING THE APPLIANCE.

⚠ WARNING

HAZARDOUS EXPLOSION MAY RESULT IF THESE WARNINGS AND INSTRUCTIONS ARE IGNORED. READ AND FOLLOW ALL WARNINGS AND INSTRUCTIONS IN THIS MANUAL TO AVOID PERSONAL INJURY, INCLUDING DEATH OR PROPERTY DAMAGE.

NOTICE TO INSTALLER:
LEAVE THESE INSTRUCTIONS WITH THE APPLIANCE OWNER FOR FUTURE REFERENCE.

NOTE: Pre-installed label on appliance with safety warnings. (Do not remove this label.)

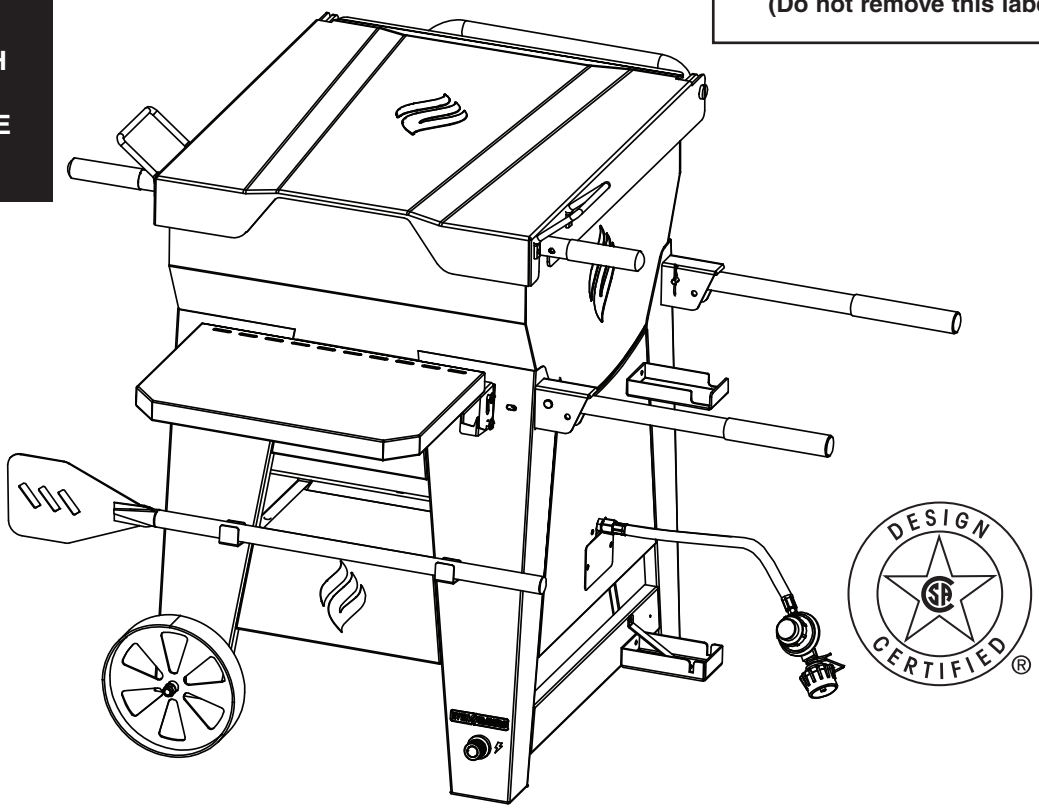

THIS APPLIANCE IS NOT FOR FRYING TURKEYS

⚠ IMPORTANT SAFETY WARNINGS

WE WANT YOU TO ASSEMBLE AND USE YOUR APPLIANCE AS SAFELY AS POSSIBLE. THE PURPOSE OF THIS SAFETY ALERT SYMBOL ⚠ IS TO ATTRACT YOUR ATTENTION TO POSSIBLE HAZARDS AS YOU ASSEMBLE AND USE YOUR APPLIANCE.

WHEN YOU SEE THE SAFETY ALERT SYMBOL ⚠ PAY CLOSE ATTENTION TO THE INFORMATION WHICH FOLLOWS!

⚠ READ ALL SAFETY WARNINGS AND INSTRUCTIONS CAREFULLY BEFORE ASSEMBLING AND OPERATING YOUR APPLIANCE.

⚠ DANGER

IF YOU SMELL GAS:

- **Shut off gas to the appliance.**
- **Extinguish any open flame.**
- **If odor continues, keep away from the appliance and immediately call your gas supplier or your fire department.**

Failure to follow these instructions could result in fire or explosion which could cause property damage, personal injury or death.

⚠ DANGER

- **Never operate this appliance unattended.**
- **Never operate this appliance within 10 feet (3 m) of any structure, combustible material of other gas cylinder.**
- **Never operate this appliance within 25 feet (7.5 m) of any flammable liquid.**
- **Do not fill cooking vessel beyond maximum fill line.**
- **Heated liquids remain at scalding temperatures long after the cooking process. Never touch cooking appliance until liquids have cooled to 115°F (45°C) or less.**
- **If a fire should occur, keep away from the appliance and immediately call your fire department.**

Failure to follow these instructions could result in fire, explosion, or burn hazard which could cause property damage, personal injury or death.

⚠ DANGER

Do not store a spare LP cylinder under or near this appliance.
Never fill the cylinder beyond 80% full.
If the information above is not followed exactly, a fire causing death or serious injury could occur.

TABLE OF CONTENTS

General Warnings 3-4
LP Gas Cylinder Specifications and Installation 5-6
Hose & Regulator Specifications and Installation 7
Leak Testing. 8
Pre-start Check List 9
Lighting Instructions 9-10
Operating Instructions 11
Proper Care and Maintenance. 11-12
Transporting and Storage. 12
Troubleshooting 13
Assembly Instructions 14-26
Warranty Information . . . . . Back Cover

DANGER: Indicates an imminently hazardous situation which, if not avoided, will result in death or serious injury.

WARNING: Be alert to the possibility of serious bodily injury if the instructions are not followed. Be sure to read and carefully follow all of the messages.

CAUTION: Indicates a potentially hazardous situation which, if not avoided, may result in minor or moderate injury.

CALIFORNIA PROPOSITION 65 WARNING

WARNING: This product can expose you to chemicals including carbon monoxide, which is known to the State of California to cause birth defects or other reproductive harm.

For more information, go to www.P65Warnings.ca.gov

WARNING: CONTAINS LEAD. MAY BE HARMFUL IF EATEN OR CHEWED. COMPLIES WITH FEDERAL STANDARDS. KEEP OUT OF REACH OF CHILDREN.

GENERAL WARNINGS

⚠ WARNING

- This appliance shall be used OUTDOORS only. Do NOT use in a building, home, garage, balcony, porch, tent or any other enclosed area. Appliances shall not be used on or under apartment or condominium balcony or deck. Do NOT install or use in or on recreational vehicles and/or boats or connected to a recreational vehicles' low-pressure LP gas system.
- When cooking, the appliance must be on a level, stable, noncombustible surface in an area clear of combustible material. An asphalt surface (blacktop) may not be acceptable for this purpose.
- Do not use on combustible flooring or surfaces.
- This appliance is not for frying turkeys or for use with oil or grease. This appliance must only be used for heating water.
- Do NOT operate appliance any closer than 10 feet from any combustible materials including walls or railings or under overhead construction.
- Water can cause severe burns and permanent disfigurement; use caution and common sense when operating this product.
- Keep children and pets away from the appliance at all times. Carefully monitor all activity around appliance to avoid burns or other injuries. Do not wear loose clothing or allow long hair to hang freely while lighting or using appliance.
- Use caution when walking or standing near appliance as water may have created a slick surface.
- Avoid bumping of or impact with the appliance to prevent spillage or splashing of hot cooking liquid.
- Never drop food or accessories into hot cooking liquid. Lower food and accessories slowly into the cooking liquid in order to prevent splashing or overflow. When removing food from the appliance care shall be taken to avoid burns from hot cooking liquids.
- Never overfill the cooking vessel with water.
- This appliance will be hot during and after use. Use insulated oven mitts or gloves for protection from hot surfaces or splatter from cooking liquids.
- Check all gas connections by following directions in the "Leak Testing" section on page 8 of this manual. Never test for gas leaks with a lighted match or open flame. Do not operate this appliance with a gas leak.
- Do not store or use gasoline or other liquid/aerosols with flammable vapors in the vicinity of this appliance.
- Storage of this appliance indoors is permissible only if the cylinder is disconnected and removed from the appliance and left outdoors. Cylinders must be stored outdoors out of the reach of children and must not be stored in a building, garage or any other enclosed area.
- Position propane cylinder and appliance, as illustrated on page 9, to protect hose from contact with hot surfaces which could create a leak. Never use a hose that shows signs of cracking or damage.
- DO NOT use external electrical sources with this appliance.
- An appliance is considered to be outdoors if installed with shelter no more inclusive than with walls on three sides, but with no overhead cover; all openings must be permanently open; sliding doors, garage doors, windows, or screened openings are not considered as permanent openings.
- An appliance is considered to be outdoors if installed with shelter no more inclusive than within a partial enclosure that includes an overhead cover and no more than two sidewalls. The sidewalls may be parallel, as in a breezeway, or at right angles to each other; all openings must be permanently open; sliding doors, garage doors, windows, or screened openings are not considered as permanent openings.
- An appliance is considered to be outdoors if installed with shelter no more inclusive than within a partial enclosure that includes an overhead cover and three sidewalls, as long as 30% or more of the horizontal periphery of the enclosure is permanently open. All openings must be permanently open; sliding doors, garage doors, windows, or screened openings are not considered as permanent openings.
- The installation shall conform with local codes or, in the absence of local codes CSA B149.1,CSA B149.2.
- The pressure regulator assembly supplied with the appliance must be used. Only use replacement 10 PSI hose/regulator # 6290-600-6290-15. This regulator can be obtained by contacting Even Embers at 1-855-735-9922 or help@fairgameus.com.

⚠ WARNING

- **The use of alcohol, prescription or non-prescription drugs may impair your ability to properly assemble or safely operate this appliance. Use caution and common sense.**
- **This appliance is not intended for and should never be used as a heater.**
- **Do not place empty cooking vessel on the appliance while in operation. Use caution when placing anything in cooking vessel while the appliance is in operation.**
- **Never use a cooking vessel larger than the capacity and diameter recommended by the manufacturer.**
- **Do not use this appliance for other than its intended purpose. Properly dispose of packaging materials.**
- **Only use replacement/accessory parts manufactured by Even Embers.**
- **Not for commercial use. DO NOT use this appliance for anything other than its intended purpose.**

⚠ **WARNING: Do not use this appliance under extended awnings. Failure to comply could result in a fire or personal injury.**

⚠ **DANGER: Do not put appliance in storage or travel mode immediately after use. Allow appliance to cool to touch before moving or storing. Failure to do so could result in fire resulting in property damage, personal injury, or death.**

⚠ **WARNING: Disconnect the appliance from the gas supply prior to storage or transportation.**

⚠ USE CAUTION AND COMMON SENSE WHEN OPERATING YOUR GAS APPLIANCE.

FAILURE TO ADHERE TO THE SAFETY WARNINGS AND GUIDELINES IN THIS MANUAL COULD RESULT IN SEVERE BODILY INJURY OR PROPERTY DAMAGE. SAVE THIS MANUAL FOR FUTURE REFERENCE.

⚠ DANGER

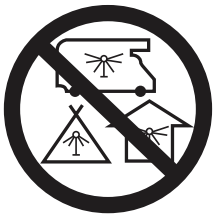

CARBON MONOXIDE HAZARD

This appliance can produce carbon monoxide which has no odor.

Using it in an enclosed space can kill you.

Never use this appliance in an enclosed space such as a camper, tent, car or home.

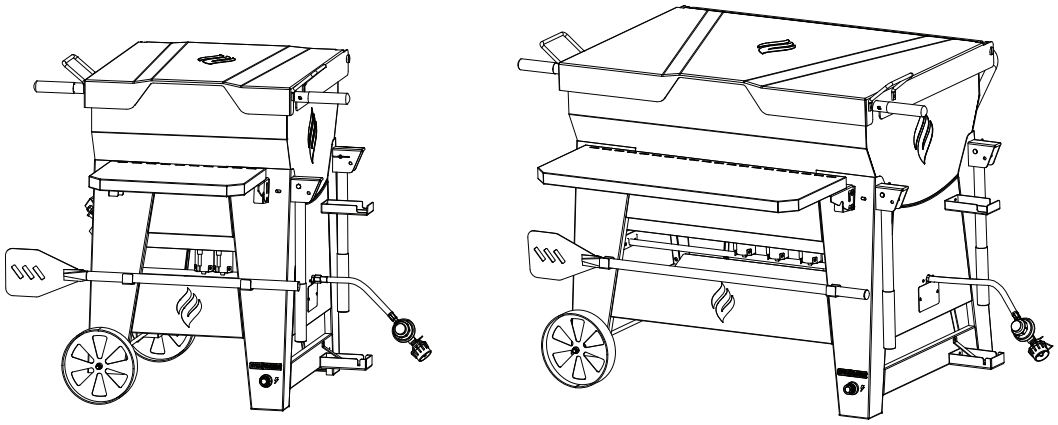

Model	Capacity	BTU	Dimensions
GAS6290AS	90 Qt.	78,000 BTU/H	45.1” x 34.7” x 34.8”
GAS6250AS	150 Qt.	146,000 BTU/H	45.1” x 48.9” x 34.8”

LP GAS CYLINDER (TANK) SPECIFICATIONS AND INSTALLATION

⚠ WARNING

- **ONLY connect this appliance to a Type 1 cylinder valve. The Type 1 valve can be identified with the large external threads on the valve outlet.**
- **DO NOT connect to a propane cylinder exceeding a 20 lb. (9.1 kg) capacity.**
- **DO NOT connect to a cylinder that uses any other type of valve connection device.**
- **Inspect the propane cylinder valve rubber seal for cracks, wear or deterioration prior to use. A damaged rubber seal can cause a gas leak, possibly resulting in an explosion, fire or severe bodily harm.**
- **Turn off the cylinder valve when your appliance is not in use.**
- **Handle the cylinder with care.**
- **Always secure the cylinder in an upright position.**
- **Never connect an unregulated LP gas cylinder to your appliance.**
- **DO NOT expose LP gas cylinders to excessive heat or ignition sources.**
- **DO NOT store a spare LP gas cylinder under or near your appliance.**
- **Allow only qualified LP gas dealers to fill or repair your LP gas cylinder.**
- **DO NOT allow the cylinder to be filled beyond 80% capacity.**
- **Read and follow all warnings and instructions that are on the cylinder and that accompany this product.**

⚠ DANGER

- **DO NOT store a spare LP gas cylinder (full or empty) near your appliance. This could cause excess pressure to be expelled through the vapor relief valve resulting in fire, explosion, or severe personal injury, including death.**
- **Propane gas is heavier than air and will collect in low areas. Proper ventilation is extremely important. Keep the ventilation opening(s) of the LP gas cylinder enclosure free and clear from obstructions and debris.**
- **DO NOT insert any foreign objects into the cylinder valve outlet as this could damage the rubber seal. Do not use propane cylinder with a damaged rubber seal. A damaged rubber seal can cause a gas leak, possibly resulting in explosion, fire, severe bodily harm, or death. Inspect rubber seal for cracks, wear or deterioration prior to use.**
- **Always keep cylinder in upright position during use, transit or storage.**

LP GAS CYLINDER (TANK) SPECIFICATIONS:

LP gas cylinder (not supplied with this appliance)
The LP (Liquid Propane) gas cylinder specifically designed to be used with this appliance must be 12” (30.5 cm) diameter x 18” (45.7 cm) tall and have a 20 lb. (9.1 kg) capacity.

The installation of this appliance must be in accordance with:

All applicable local codes, or in the absence of local codes, either:

- National Fuel Gas Code ANSI Z223.1 NFPA 54
- Natural Gas and Propane Installation Code: CAN/CGA B149.1
- Natural Gas Installation Code: CAN/CGA B149.1 (Canada)
- Propane Installation Code: CAN/CGA B149.2 (Canada)

To check your local codes, see your local LP gas dealer or natural gas company. This appliance was not intended to be connected to a natural gas supply line. If an external electrical source is utilized, it must be electrically grounded in accordance with local codes, or in the absence of local codes, with the National Electrical Code, ANSI/NFPA 70, or the Canadian Electrical Code, CSA 22.1.

When purchasing or exchanging a cylinder for your gas appliance, it must be constructed and marked in accordance with the specifications for LP gas cylinders of the U.S. Department of Transportation (DOT) or the National Standard of Canada, CAN/CSA-B339 Cylinders, Spheres and Tubes for Transportation of Dangerous Goods; and Commission, as applicable; and provided with a listed over-filling prevention device (OPD), and provided with a cylinder connection device compatible with the connection for outdoor cooking appliances.

The cylinder must also be equipped with:

- A shut-off valve terminating in a Type 1 gas cylinder valve outlet.
- A Type 1 valve that prevents gas flow until a positive seal is obtained.
- An arrangement for vapor withdrawal.
- A collar to protect the cylinder shut-off valve.
- A safety relief device having direct communication with the vapor space of the cylinder.
- A listed over-filling prevention device (OPD).

FILLING THE LP GAS CYLINDER (TANK):

⚠ WARNING

- **Allow only qualified licensed LP gas dealers to properly fill or repair your LP gas cylinder.**
- **New cylinders should be purged prior to filling; inform LP gas dealer if you are using a new cylinder.**
- **DO NOT allow the cylinder to be filled beyond 80% capacity. Over-filled cylinders can create a dangerous condition. Over-filled cylinders can build-up pressure and cause the relief valve to expel propane gas vapors. The vapor is combustible and if it comes in contact with a spark source or flame an explosion causing severe burns, bodily harm, or death could occur.**
- **Always use a protective cylinder cap when appliance is not connected to cylinder.**
- **If you exchange a cylinder with a qualified exchange program, the new cylinder must have a Type 1 valve and an over-filling prevention device (OPD).**
- **Inspect the propane cylinder valve rubber seal for cracks, wear or deterioration prior to use. A damaged rubber seal can cause a gas leak, possibly resulting in an explosion, fire or severe bodily harm.**

LP GAS CYLINDER (TANK) RUBBER SEAL INSPECTION:

- Inspect the LP cylinder valve rubber seal for cracks, wear or deterioration prior to use. Over time, a damaged rubber seal might cause a gas leak even with the connection tightened.
- A visual inspection of the seal should be done each time the LP cylinder is connected to the appliance, has been refilled, exchanged or has not been used for more than 60 days.
- Do not use a LP cylinder with a damaged rubber seal as shown. The LP cylinder must be returned unused to the seller.

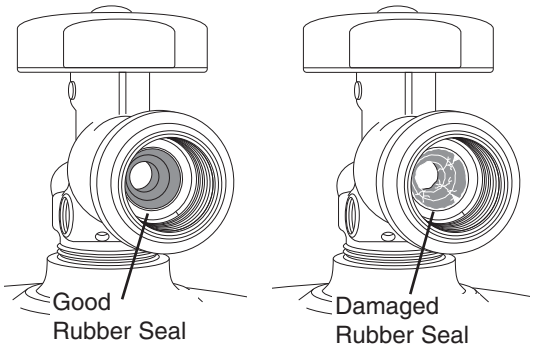

HOSE & REGULATOR SPECIFICATIONS AND INSTALLATION

⚠ WARNING

- **DO NOT use any other pressure regulator/hose assembly other than the one supplied with your appliance. Replacement 10 PSI regulator/hose must be part No 6290-600-6290-15, which can be obtained by contacting customer service at 1-855-735-9922 or help@fairgameus.com.**
- **DO NOT attempt to adjust or repair a regulator. The regulator is designed to operate at a maximum output pressure of 10 psi (34.5 kPa).**
- **Ensure the cylinder valve is CLOSED prior to connecting the LP gas cylinder to your appliance. Turn the valve knob clockwise to properly close the valve. Read and follow all instructions and warnings on the supply hose safety tags. Read and follow all warnings in this manual concerning the safe use of LP gas cylinders and the hose and regulator before connecting cylinder to appliance. Read and follow all warnings on the LP cylinder.**

HOSE AND REGULATOR:

Your appliance is equipped with a Type 1 connection device with the following features:

1. The system will not allow gas flow from the cylinder until a positive connection to the valve has been made.
   Note: The cylinder valve and regulator control knob must be turned off before any connection is made or removed.
2. A regulator flow limiting device, when activated, restricts the flow of gas to 10 cubic feet per hour. If the flow limiting device is activated, perform Regulator Resetting Procedure below.

CONNECTING HOSE AND REGULATOR TO LP GAS CYLINDER:

1. Inspect the propane cylinder valve rubber seal for cracks, wear or deterioration prior to use. A damaged rubber seal can cause a gas leak, possibly resulting in an explosion, fire or severe bodily harm. Do not use a propane cylinder with a damaged rubber seal.
2. Check that the cylinder valve is closed by turning the knob clockwise.
3. Check that the appliance's regulator control knob in the off position.
4. Visually inspect the hose assembly prior to each use for evidence of damage, excess wear, or deterioration. If found, replace the assembly before using your appliance. Only the manufacturer's supplied replacement should be used.
5. Remove the protective plastic cap from the cylinder valve.
6 Check that the hose does not contain kinks, does not contact sharp edges, and does not contact surfaces that may become hot during use.

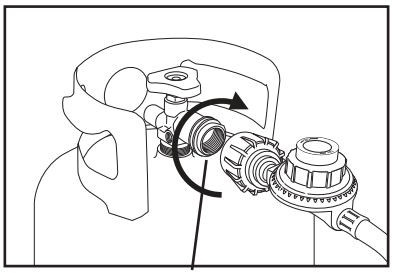

Inspect Rubber Seal (see page 6)

7. Hold regulator and insert the brass nipple into the LP cylinder valve outlet. Ensure that the device is centered properly.
8. Turn the large coupling nut clockwise by hand and tighten to a full stop. Take care not to cross thread the coupling nut onto the cylinder valve. Do not use tools to tighten connection.
   Note: If you are unable to make the connection, repeat Steps 6 and 7.
9. Leak check all fittings before lighting your appliance. See section on "Leak Testing" in this manual.
   Note: To remove regulator from propane cylinder, turn off the cylinder valve and rotate the large coupling nut counter-clockwise and remove.

REGULATOR RESETTING PROCEDURE:

If your appliance will not get hot enough to cook, the flow limiting device may have been activated.

Mini Reset: Turn regulator control knob to off position, then turn off the cylinder valve. Wait one minute. Slowly turn cylinder valve on and follow lighting instructions. If burner flame is higher and appliance heats up properly – proceed with cooking.

Full Reset: Turn regulator control knob to off position, then turn off the cylinder valve. Disconnect hose and regulator from cylinder. Wait two minutes, reattach hose and regulator and perform leak test.

LEAK TESTING

⚠WARNING

- **Never use your appliance without leak testing all gas connections and propane cylinder. Follow the section on "Leak Testing" in this manual for proper procedures.**

⚠ DANGER

To prevent fire or explosion hazard:

- **DO NOT smoke or permit ignition sources in the area while conducting a leak test.**
- **Perform test OUTDOORS in a well ventilated area that is protected from the wind.**
- **Never perform a leak test with a match or open flame.**
- **Never perform a leak test while the appliance is in use or while appliance is still hot.**

WHEN TO PERFORM A LEAK TEST:

- After assembling your appliance and before lighting for the first time, even if purchased fully assembled.
- Every time the LP gas cylinder is refilled, exchanged or if any of the gas components are disconnected or replaced.
- Any time your appliance has been moved.
- At least once per year or if your appliance has not been used for more than 60 days.

CHECKING FOR LEAKS:

⚠ **CAUTION: Strong odors, colds, sinus congestion, etc. may prevent the detection of propane by smell. Use caution and common sense when testing for leaks.**

Note: The leak test must be performed in an area that has adequate lighting in order to see if bubbles are developing and not in a windy or noisy area so larger leaks can be detected by smell or sound.

1. Create a mixture of 50% water and 50% liquid dishwashing soap.
2. Turn the cylinder valve knob counter-clockwise to full open. If you hear a rushing sound or smell gas, turn the gas off. Tighten any leaking connections. If leak is detected at connection nut and tightening does not stop leak, reinspect propane tank rubber seal.
3. Apply the soapy water mixture to the following:
   - (A) Supply tank (cylinder) weld.
   - (B) Connection nut to tank valve.
   - (C) Back side of connection nut to brass nipple.
   - (D) Brass nipple connection into regulator.
   - (E) Tank valve to cylinder.
4. Check each place listed (A–E) for growing bubbles, which indicates a leak. Large leaks may not be detected by bubbles but should produce a rushing sound or gas smell.
5. Turn off gas supply at cylinder valve.
6. Turn regulator control knob to "OFF" position.
7. Tighten any leaking connections. If leak is detected at connection nut and tightening does not stop leak, reinspect propane tank rubber seal. (see page 6)
8. Repeat soapy water test until no leaks are detected.
9. Turn off gas supply at cylinder valve until you are ready to use your appliance.
10. Wash off soapy residue with cold water and towel dry.
11. Wait 5 minutes to allow all gas to evacuate the area before lighting appliance.

⚠ **WARNING: DO NOT** use the appliance if leaks cannot be stopped. Contact a qualified gas appliance repair service.

Watch For Bubbles

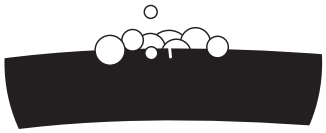

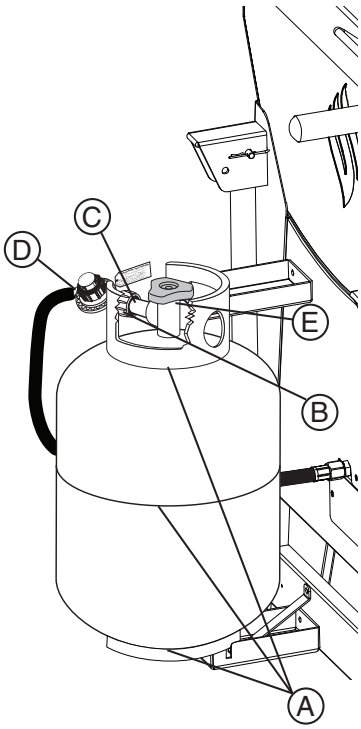

PRE-START CHECK LIST

⚠ DANGER

Property damage, bodily harm, severe burns, and death could result from failure to follow these safety steps. These steps should be performed after the appliance has been assembled and prior to each use. DO NOT operate this appliance until you have read and understand ALL of the warnings and instructions in this manual.

- Ensure that the appliance is properly assembled.
- Inspect the gas supply hose for burns, chaffing, kinks, and proper routing before each use. If it is evident there is excessive abrasion or wear, or the hose is cut, it must be replaced prior to the appliance being used. Replace with 10 PSI hose/regulator Model No. 6290-600-6290-15, which can be obtained by contacting customer service at 1-855-735-9922 or help@fairgameus.com.
- Leak check all gas connections, hose and propane. See section on "Leak Testing".
- Ensure that all electrical supply cords are properly grounded. Keep any electrical supply cord and the fuel supply hose away from any heated surfaces. Hose should be at least 3 inches from hot surfaces.
- Position your appliance on a non-combustible level surface in a well ventilated location, a safe distance from combustible materials, buildings and overhangs.

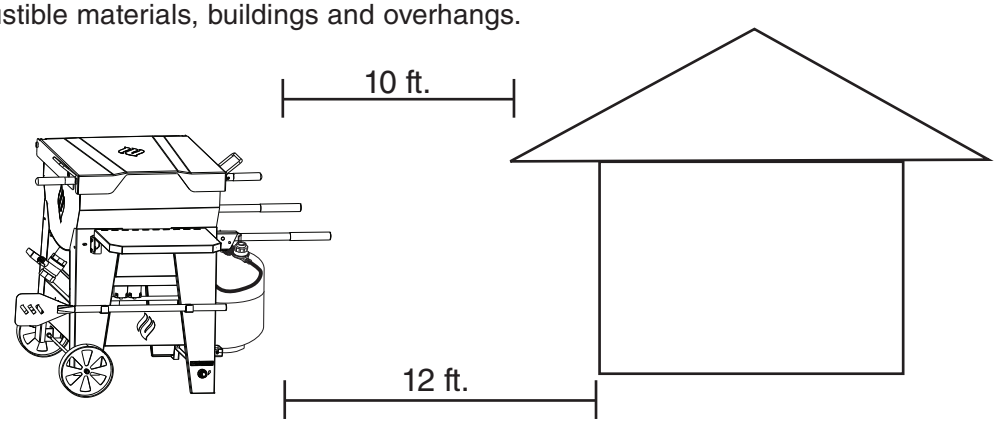

Note: Due to the intense heat from burner, it is normal for discoloration to occur on appliance during the first few uses.

LIGHTING INSTRUCTIONS

⚠ WARNING

Follow the instructions exactly. Read, understand and follow all warnings and instructions contained in this manual. DO NOT skip any of the warnings and instructions contained in the preceding sections of this manual.

LIGHTING THE BURNER:

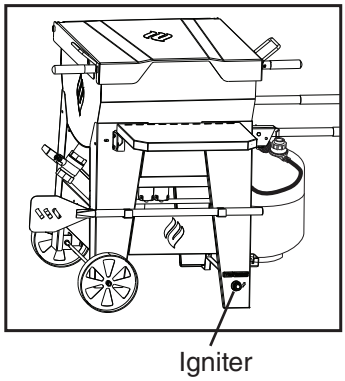

1. Make sure cylinder valve and regulator control knob are in the off position.
2. Turn on the fuel supply by rotating the cylinder valve counter-clockwise to full open.

⚠ **CAUTION**: DO NOT stand with head, body, or arms over the appliance when lighting.

3. Push and hold igniter button, then open regulator control knob by turning slowly clockwise until burner ignites.
4. If burner does NOT ignite within 5 seconds, turn the regulator control knob and cylinder valve to off position, wait 5 minutes for gas to dissipate and repeat lighting procedure.
5. If the burner does not light within the first few attempts, there is a problem with the gas supply. Turn off the gas at the regulator control knob and cylinder valve. DO NOT attempt to operate the appliance until the problem is found and corrected.

MANUAL LIGHTING THE BURNER:

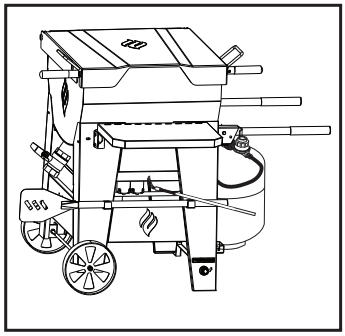

1. Make sure cylinder valve and regulator control knob are in the off position.
2. Turn on the fuel supply by rotating the cylinder valve counter-clockwise to full open.

⚠ **CAUTION**: DO NOT stand with head, body, or arms over the appliance when lighting.

3. Use a long reach butane lighter and place approximately ½" (1 to 2 cm) from the burner, then open regulator control knob by turning slowly clockwise until burner ignites.
4. If the burner does not light within 5 seconds, turn the regulator control knob and cylinder valve to off position, wait 5 minutes for gas to dissipate and repeat lighting procedure.
5. If the burner does not light within the first few attempts of manual lighting, there is a problem with the gas supply. Turn off the gas at the regulator control knob and cylinder valve. DO NOT attempt to operate the appliance until the problem is found and corrected.

   Note: If burner does not light or flame is too low, see "Troubleshooting" section of the owner's manual.

BURNER FLAME CHECK

Adjust flame height using regulator control knob. A blue flame with little or no yellow flame provides the best heat. The manufacturer has properly located the burners with respect to the orifices to allow the appliance to burn sufficiently. Do not attempt to adjust the burners.

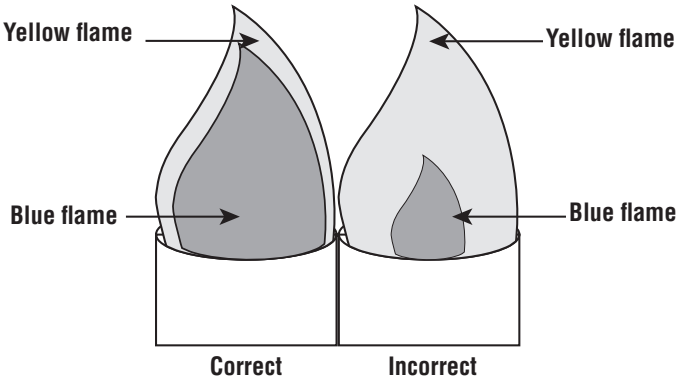

TURNING OFF THE APPLIANCE:

1. Turn off the cylinder valve.
2. Turn regulator control knob to the off position.

   Note: Turn off LP cylinder first to prevent gas from being left in the system under pressure.

3. To disconnect valve regulator/hose assembly, turn the large regulator coupling counter-clockwise by hand.

⚠ **CAUTION:** The cylinder valve should always be in the off, or closed, position when the appliance is not in use.

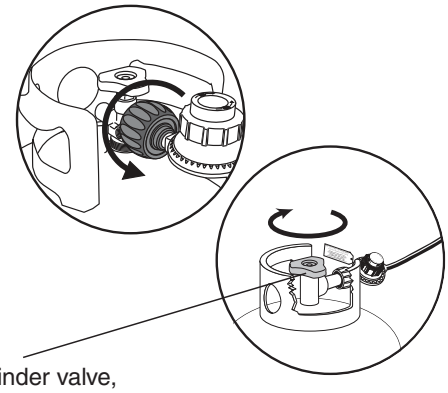

To turn off the cylinder valve, turn knob clockwise until it stops.

OPERATING INSTRUCTIONS

⚠WARNING

Read, understand and follow all warnings and instructions contained in this manual. DO NOT skip any of the warnings and instructions contained in the preceding sections of this manual.

- Make sure appliance is at least 10 ft from all combustible materials including overhangs.
- Do not place an empty cooking vessel in the appliance or allow a filled vessel to boil dry while appliance is in operation.
- Always monitor your cooking and ensure there is enough liquid in the cooking vessel at all times.
- Use extreme care when lowering or removing food from hot oil or liquid.

DRAINING LIQUIDS FROM BASKETS:

- Wear protective gloves if necessary.
- Lift basket slowly to drain liquids from basket before emptying food.
- The stirring paddle can be placed under the basket in either notch to hold basket while draining.

⚠ **CAUTION:** Basket and handle surfaces remain hot during and after use. Secure stirring paddle when draining basket to avoid basket falling and splashing hot liquids.

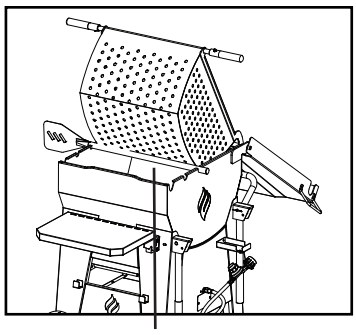

Basket Support
(Stirring Paddle)

PROPER CARE AND MAINTENANCE

BURNER CLEANING AND MAINTENANCE:

- Keep appliance area clear and free from combustible materials, gasoline and other flammable vapors and liquids.
- Although your burner is constructed of steel, it may rust as a result of the extreme heat and acids from cooking foods. Regularly inspect the burner for cracks, abnormal holes, and other signs of corrosion damage. If found, replace the burner.

WARNING: DO NOT obstruct the flow of combustion and ventilation air. Burner tubes can become blocked by spiders and other insects building their nests. A blocked burner tube can obstruct gas flow. To clean the Burner Assembly follow these instructions to clean and/or replace the burner assembly or if you have trouble igniting the appliance.

1. Turn gas off at control knob and disconnect hose/regulator from LP cylinder tank.
2. Inspect and remove any obstructions from the burner tubes (spider webs, leaves, dirt or debris, etc.).

Note: Wear eye protection when cleaning burner tubes with compressed air.

3. Wire brush entire outer surface of burner to remove food residue and dirt.
4. If burner is damaged, obtain a replacement burner.

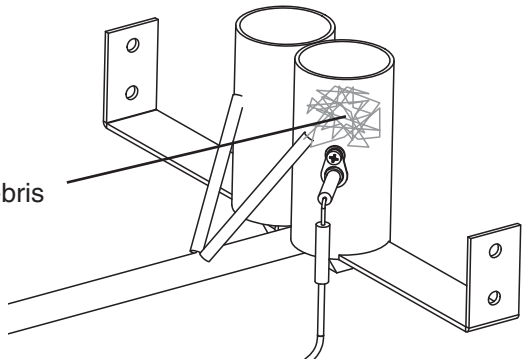

- For safe cooking and peak performance of your appliance, perform these checks at least twice per year or after extended periods of storage.
- Be sure to tighten all hardware (nuts, bolts, etc.) before each use.

⚠ **CAUTION:** Some parts may contain sharp edges. Wear protective gloves if necessary.

- Clean appliance with mild dishwashing detergent, hot water and sponge. A soft bristle brush can also be used.
- Inspect entire appliance, including regulator, and replace any damaged or worn parts. Use only parts specified by Even Embers.

TRANSPORTING AND STORAGE

⚠ WARNING

- **Make sure that regulator control knob is in off position.**
- **DO NOT store a spare LP gas cylinder (filled or empty) under or near the appliance.**
- **Never store flammable liquids or spray canisters under or near the appliance.**
- **If the outdoor cooking gas appliance is not in use, the propane cylinder must be disconnected.**
- **Storage of an outdoor cooking gas appliance indoors is permissible only if the gas cylinder is disconnected and removed from the outdoor cooking gas appliance.**
- **Cylinders must be kept out of reach of children.**

BEFORE STORING YOUR APPLIANCE:

- Ensure that the cylinder valve is fully closed.
- Clean all surfaces. Lightly coat the burners with cooking oil to prevent excess rusting.
- If storing the appliance indoors, disconnect the LP tank and leave the LP tank OUTDOORS.
- Place dust cap on cylinder valve outlet whenever the cylinder is not in use. Only install the type of dust cap on the cylinder valve outlet that is provided with the cylinder valve. Other types of caps or plugs may result in leakage of propane.
- Check and clean burner prior to use after storing, at the beginning of grilling season or after a period of not being used. Spiders and insects like to build nests in burner tubes (especially during colder months). Blocked burner tubes can prevent gas flow to the burners and could result in a burner tube fire or fire beneath the appliance. See “Burner Assembly/Maintenance” under Proper Care and Maintenance.
- To extend and maintain the life and condition of the appliance, we recommend that the unit be covered when stored outside.
- If rust appears on the exterior surface of your frame, clean and buff the affected area with steel wool or fine grit emery cloth. Touch-up with a good quality high-temperature resistant paint.

TROUBLESHOOTING

Problem	Possible Cause	Prevention/Cure
Burner will not light	LP gas cylinder is low or empty	Check if propane cylinder is empty. If empty, replace.
	LP gas leak	1. Turn regulator control knob valve to closed 2. Wait 5 minutes for gas to clear 3. Follow “Leak Testing” in the owner’s manual
	LP gas cylinder not fully connected	Tighten propane cylinder hand tight to regulator
	Obstruction of gas flow in burner ports	Clean burner assembly
	Burner ports clogged or blocked	Clean burner ports
Appliance does not get hot enough	Out of gas	Replace propane cylinder
	Regulator flow limiting device may be activated	Reset flow limiting device
Irregular flame pattern	Burner ports are clogged or blocked	Clean burner ports
Flame is yellow or orange	New burner may have residual manufacturing oils	Burn appliance for 15 minutes on high
	Food residue, grease, etc.	Clean burner assembly
Flame blows out	High or gusting winds	Do not use appliance in high winds
	Low on LP gas	Replace propane cylinder
	Burner ports may be obstructed	Refer to “Burner Assembly/Maintenance” instructions
Water does not reach desired temperature	Food is not fully defrosted	Do not attempt to boil frozen or partially frozen food. Ensure the food is completely thawed prior to boiling.
	The regulator control knob valve is not fully opened	Fully open the regulator control knob valve. The regulator control knob valve is opened in clockwise direction.

ASSEMBLY INSTRUCTIONS

⚠ READ ALL SAFETY WARNINGS & ASSEMBLY INSTRUCTIONS CAREFULLY BEFORE ASSEMBLING OR OPERATING YOUR APPLIANCE.

The following tools are required to assemble this Even Embers Crawfish Boiling Kit:

- **Phillips Screwdriver**
- **Adjustable Wrench**

PARTS LIST:

① 1 Lid
② 2 Lid Handles
③ 1 Strainer Basket
④ 2 Basket Handles
⑤ 1 90 Qt. Pot
⑥ 1 Right Side Panel Heat Shield
⑦ 1 Right Side Panel
⑧ 1 Right Side Panel Cover
⑨ 2 Cart Handles
⑩ 1 Stirring Paddle
⑪ 1 Left Shelf Bracket
⑫ 1 Right Shelf Bracket
⑬ 1 Shelf
⑭ 1 Igniter Module
⑮ 1 Right Front Leg
⑯ 1 Right Rear Leg
⑰ 1 Upper Tank Support
⑱ 1 Burner Assembly (90 Qt.)
⑱-b 1 Burner Assembly (150 Qt.)
⑲ 1 Lower Tank Reinforcement
⑳ 1 Lower Tank Support
㉑ 1 Right Leg Brace
㉒ 1 Lower Front Panel
㉓ 1 Front Panel Heat Shield
㉔ 1 Upper Front Panel
㉕ 1 Cart Base
㉖ 1 Left Front Leg
㉗ 1 Axle
㉘ 2 Wheels
㉙ 1 Lower Left Leg Brace
㉚ 1 Rear Left Leg
㉛ 1 Upper Left Leg Brace
㉜ 1 Lower Rear Panel
㉝ 1 Lid Support

HARDWARE LIST:

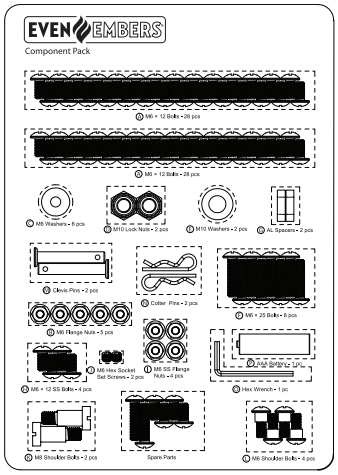

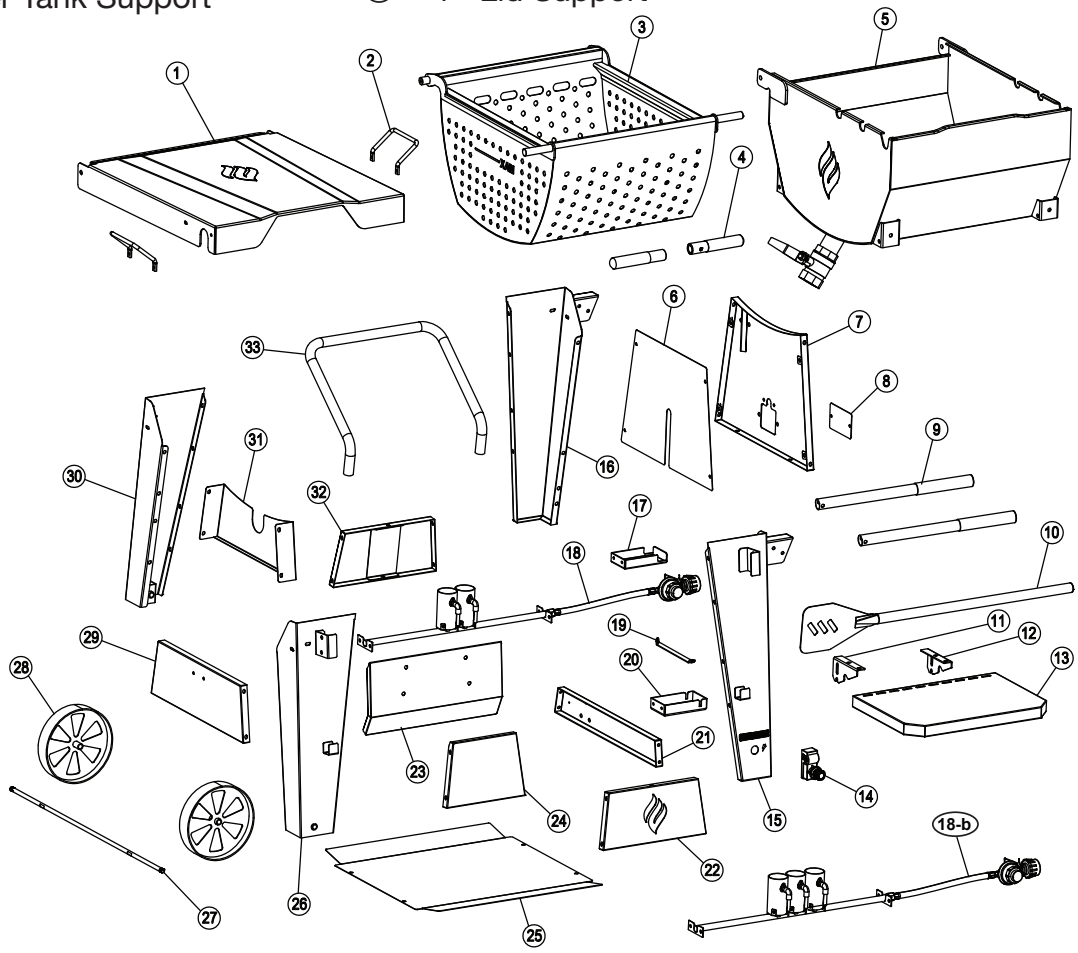

1

Attach lower left leg brace 29 to left front leg 26 and rear left leg 30 using four M6 x 12 mm bolts.

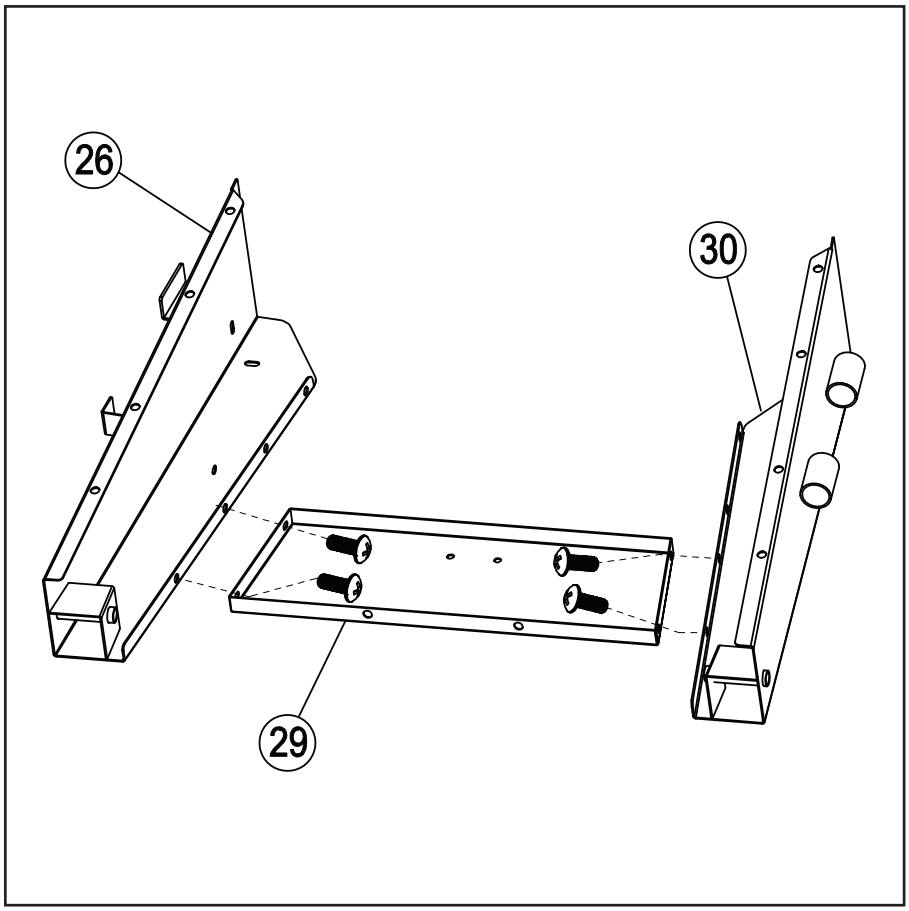

2

Attach right side panel 7 and right leg brace 21 to right front leg 15 and right rear leg 16 using eight M6 x 12 mm bolts.

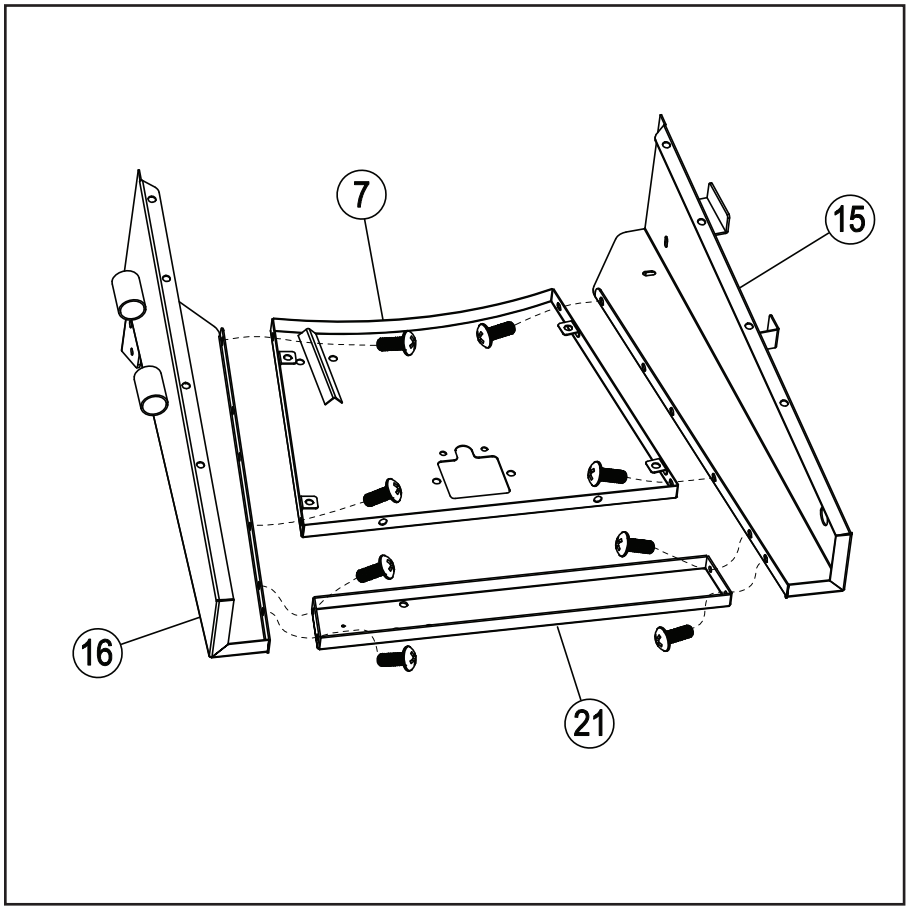

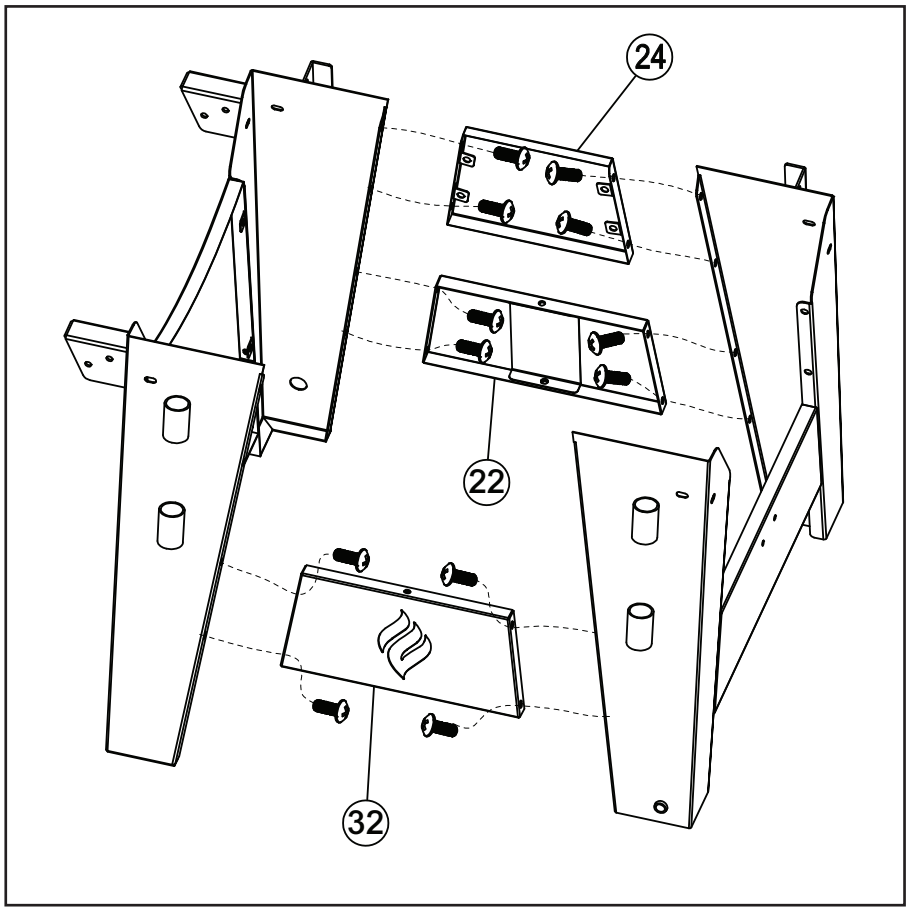

3

Attach upper front panel 24, lower front panel 22 and rear panel 32 to left and right legs using twelve M6 x 12 mm bolts.

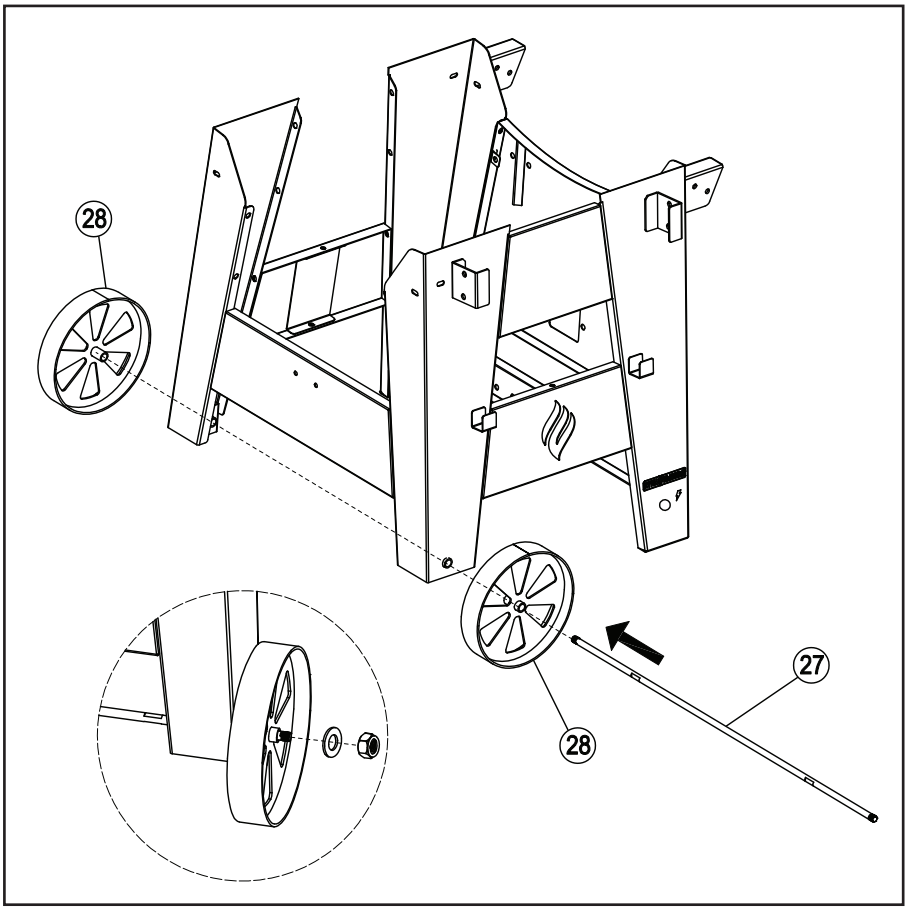

4

Insert axle 27 through wheel 28, left front leg, left rear leg and other wheel 28. Secure using two M10 washers and M10 lock nuts.

5

Attach cart base 25 to right side panel 7 and lower left leg brace 29 using four M6 x 12 mm bolts.

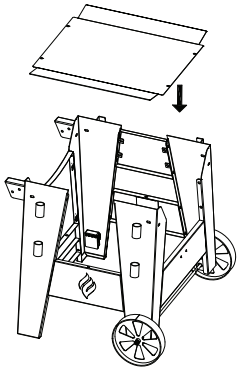

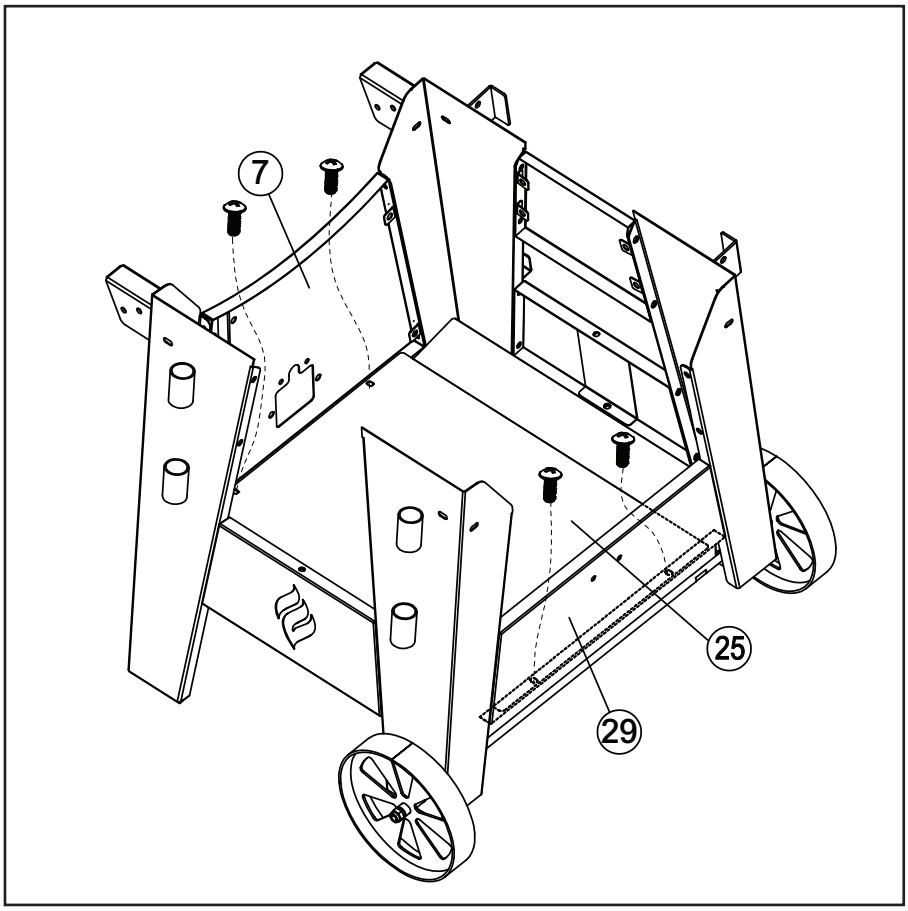

6

Insert burner assembly 18 through right side panel 7 and secure using four M6 x 12 mm bolts and M6 flange nuts.

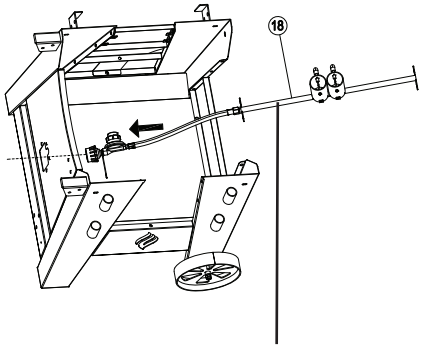

Burner Assembly
(90 Qt. or 150 Qt)

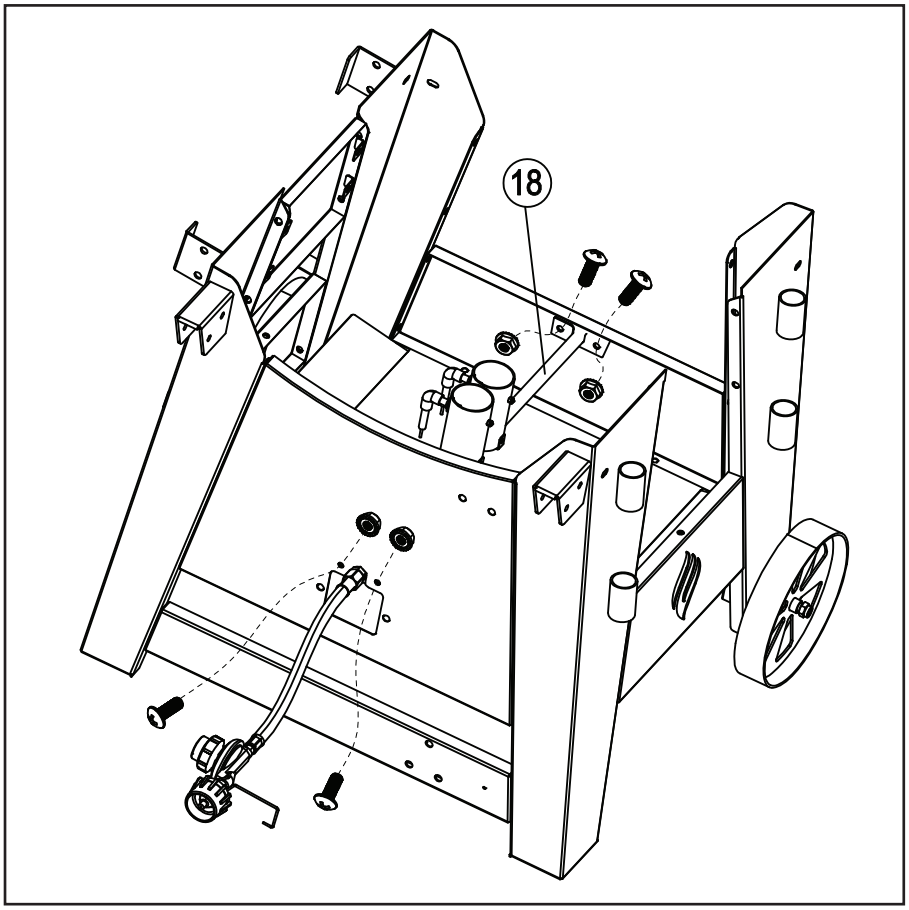

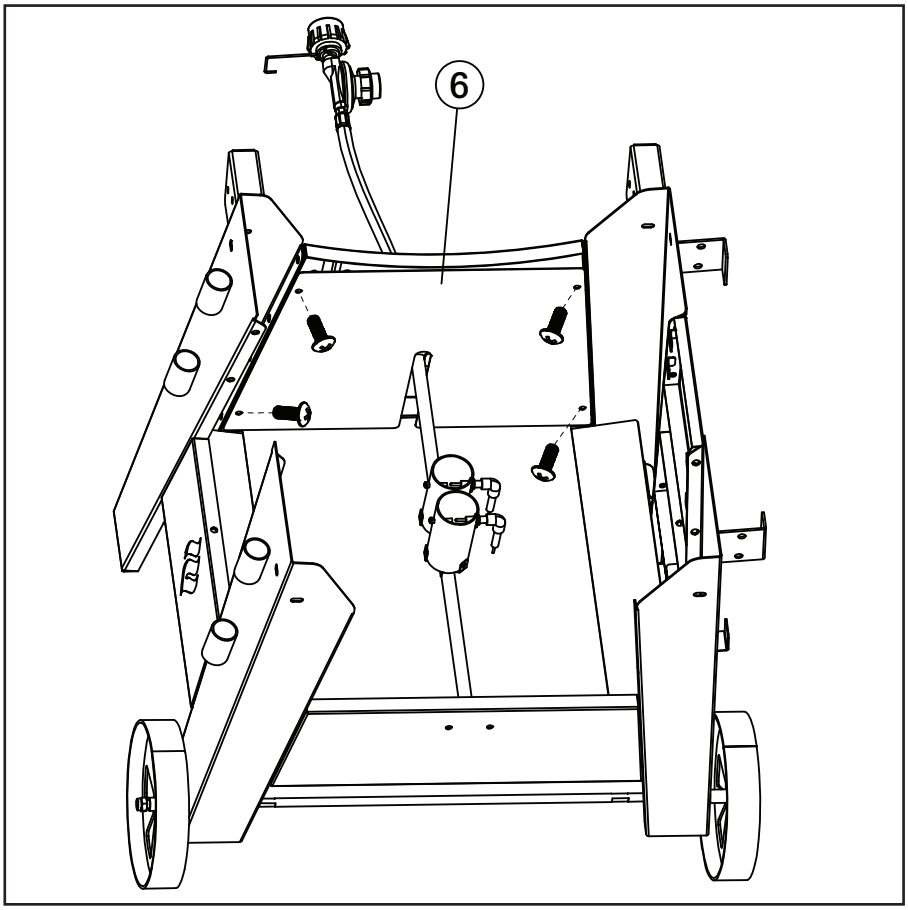

7

Attach right side panel heat shield 6 to inside of right side panel 7 using four M6 x 12 mm bolts.

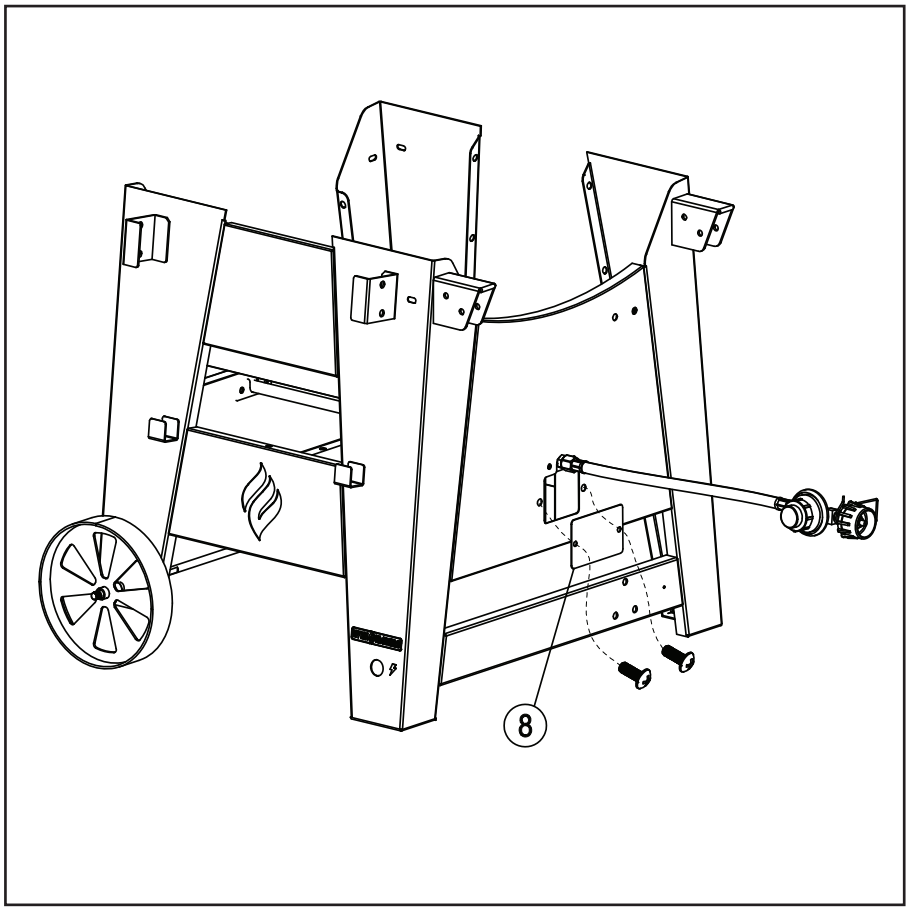

8

Attach right side panel cover 8 to outside of right side panel 7 using two M6 x 12 mm bolts.

9

Remove igniter cap and retaining nut from igniter module ⑭.

Attach igniter module ⑭ to right front leg ⑮ using retaining nut. Insert AA battery with positive end toward igniter cap and replace igniter cap.

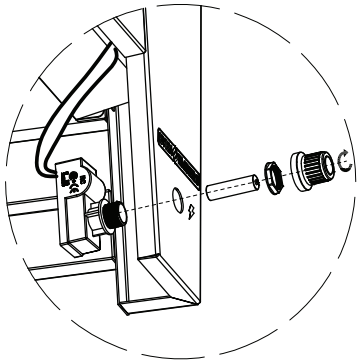

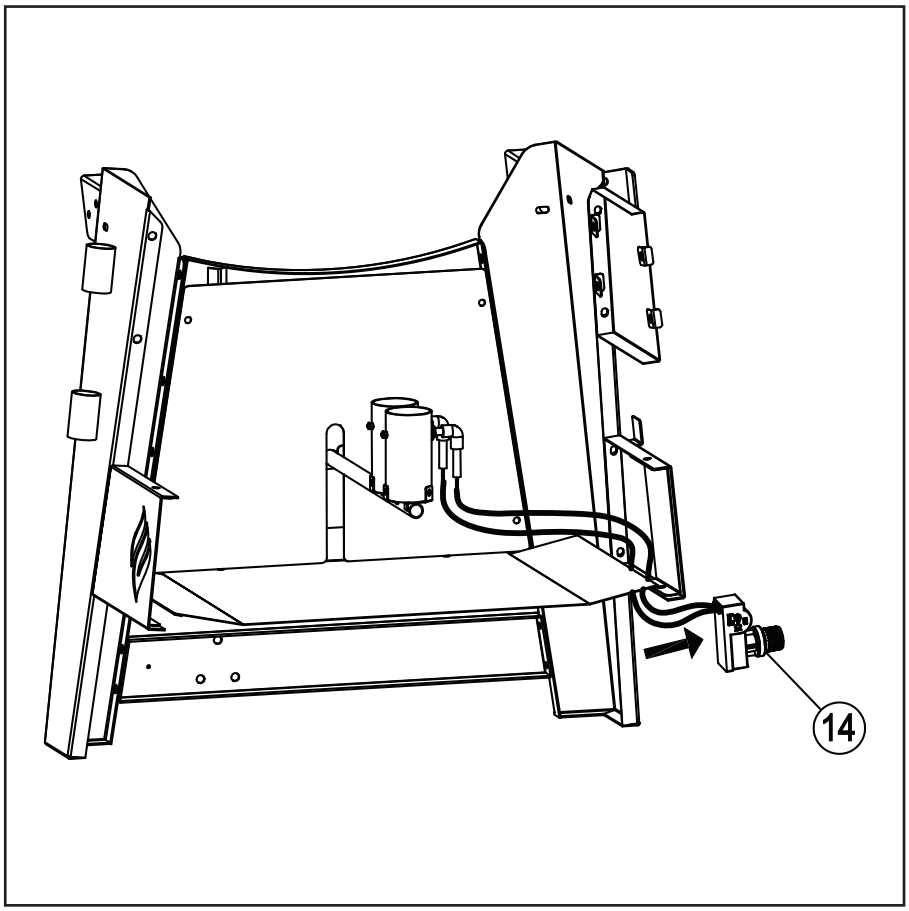

10

Attach front panel heat shield ㉓ to front legs using four M6 x 12 mm bolts.

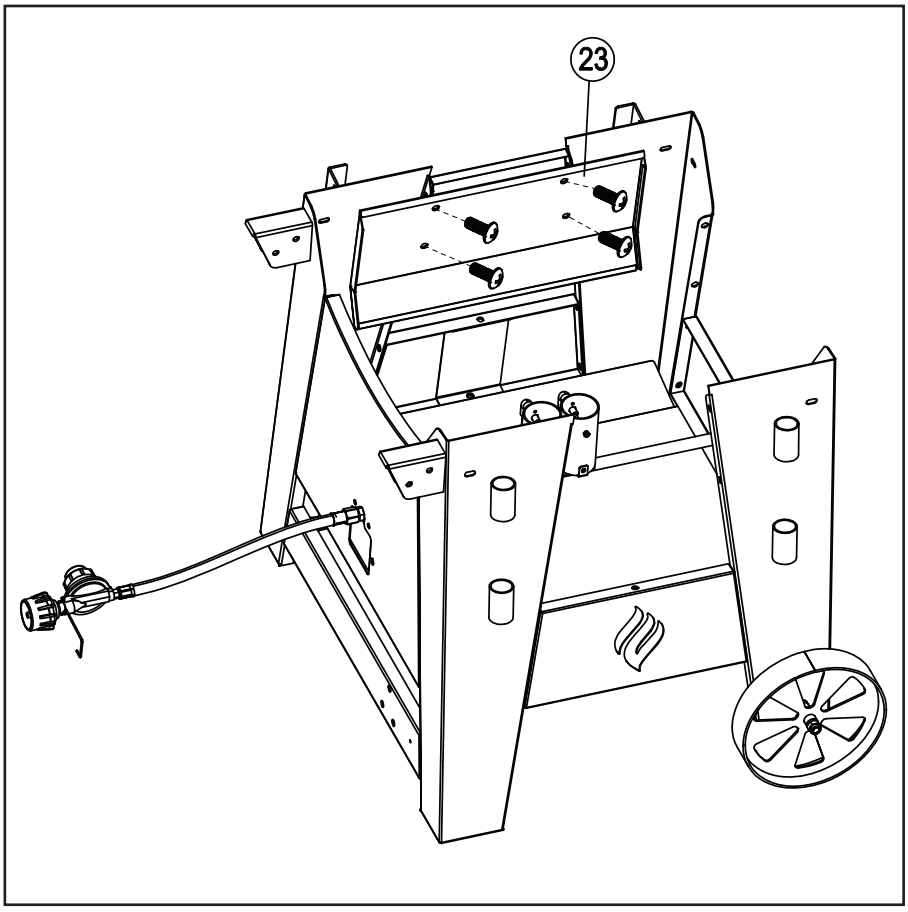

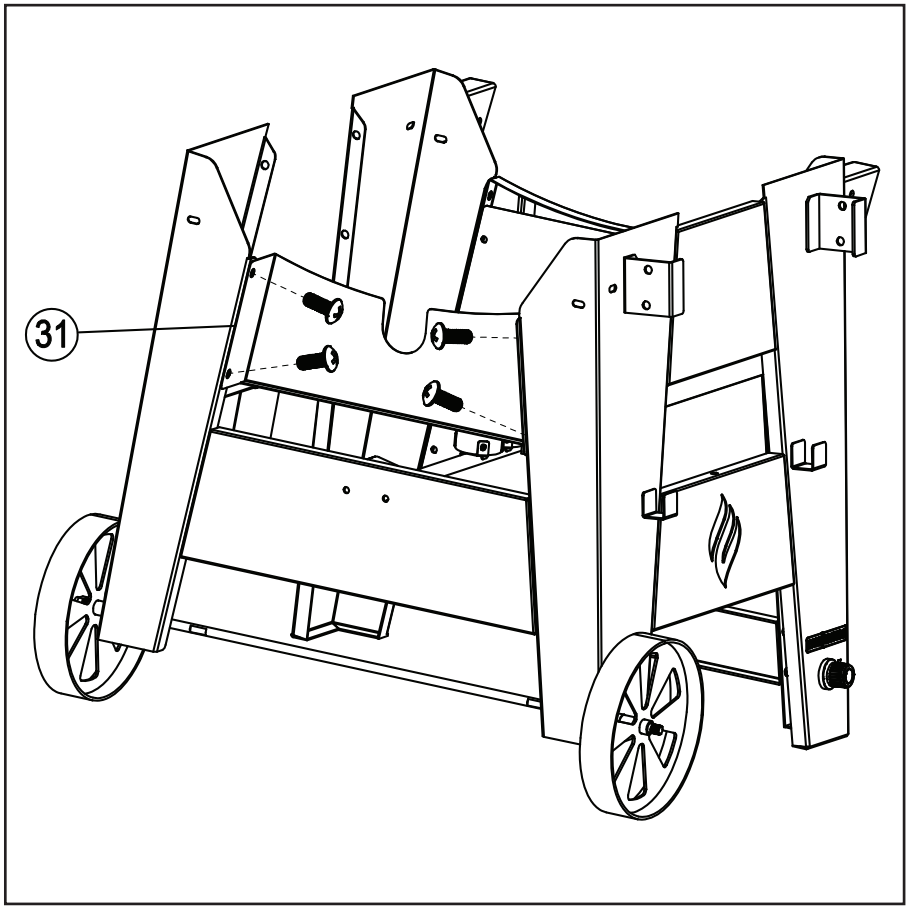

11

Attach upper left leg brace 31 to left legs using four M6 x 12 mm bolts.

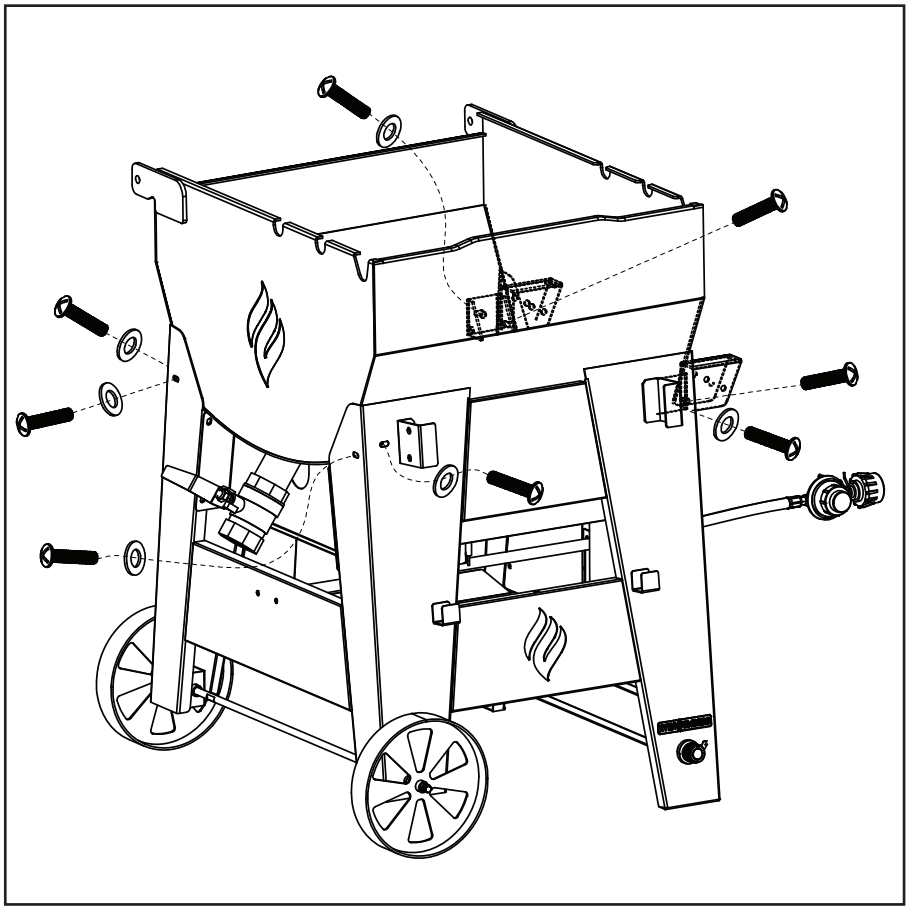

12

Set 90 qt. pot 5 onto cart assembly.

Secure 90 qt pot 5 to cart assembly using eight M6 x 25 mm bolts and six M6 washers.

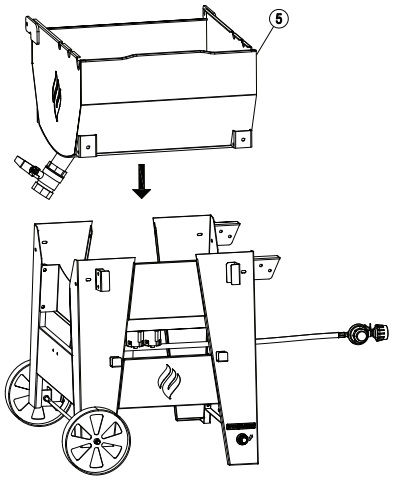

13

Place basket ③ and lid ① in 90 qt. pot ⑤.

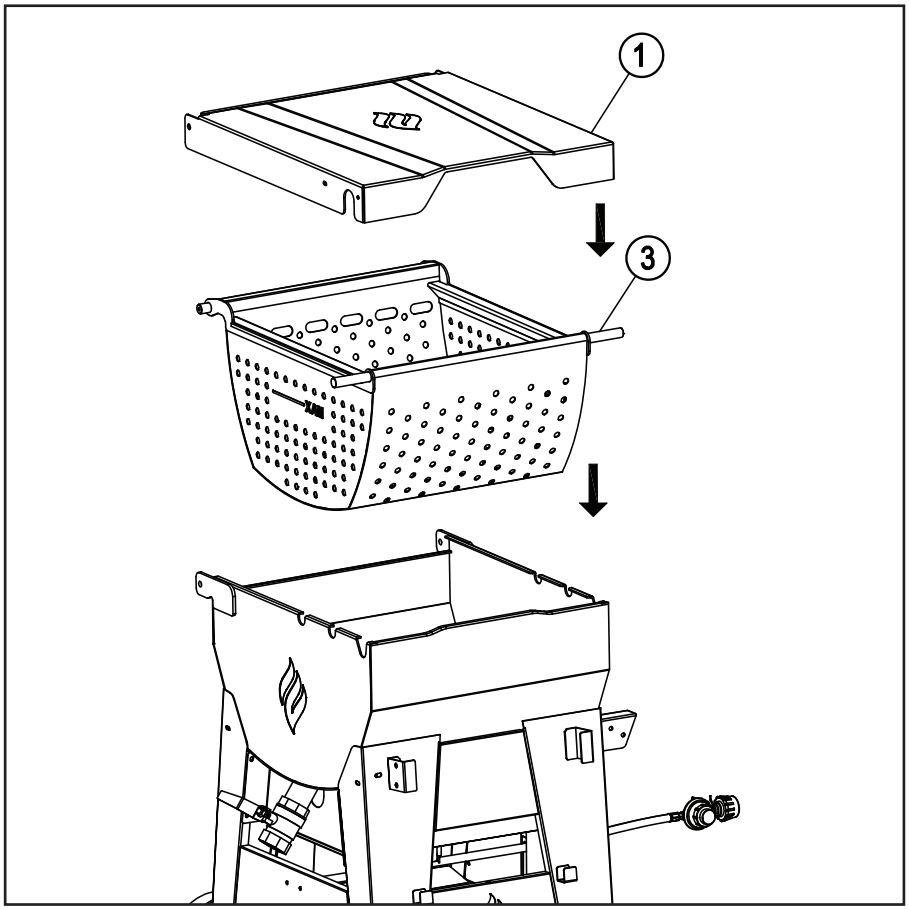

14

Secure basket ③ and lid ① in 90 qt. pot ⑤ using two M8 shoulder bolts and AL spacers.

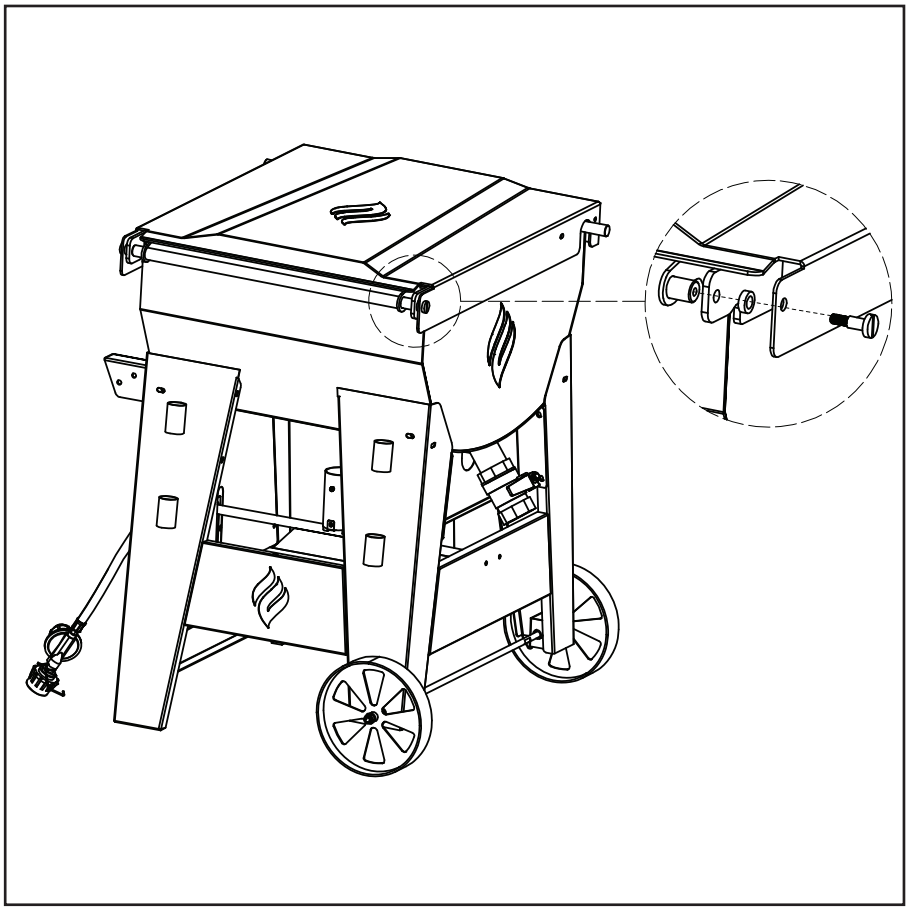

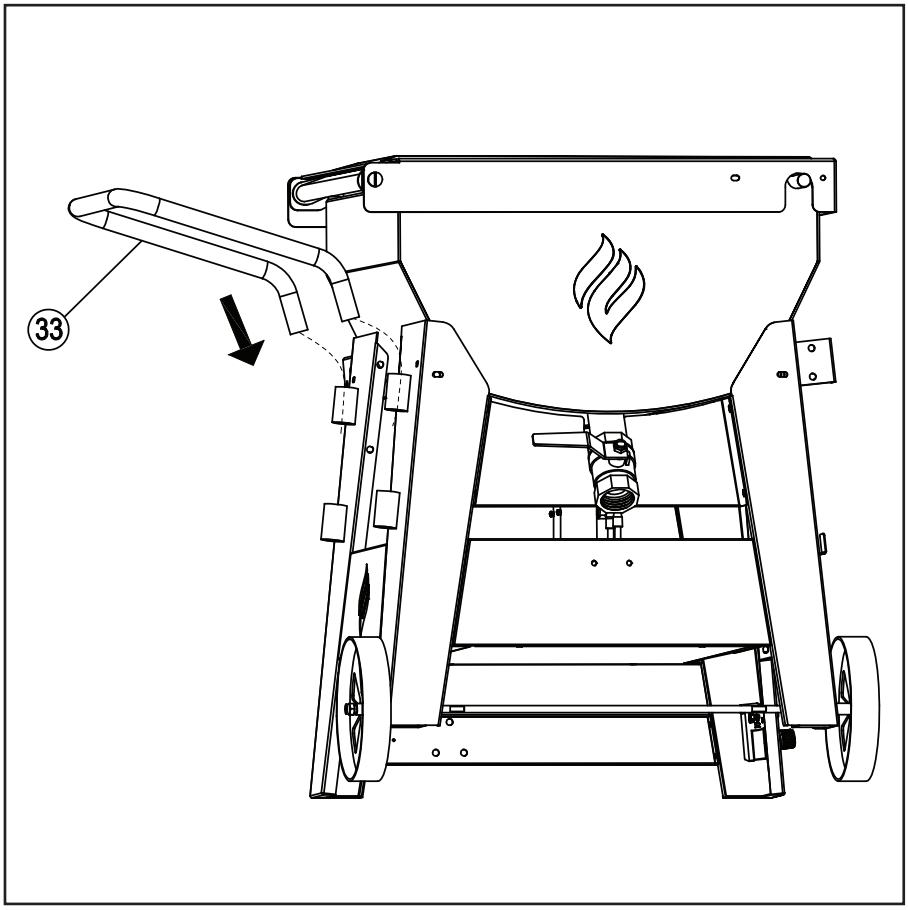

15

Insert lid support 33 into either set of brackets on rear of boiler.

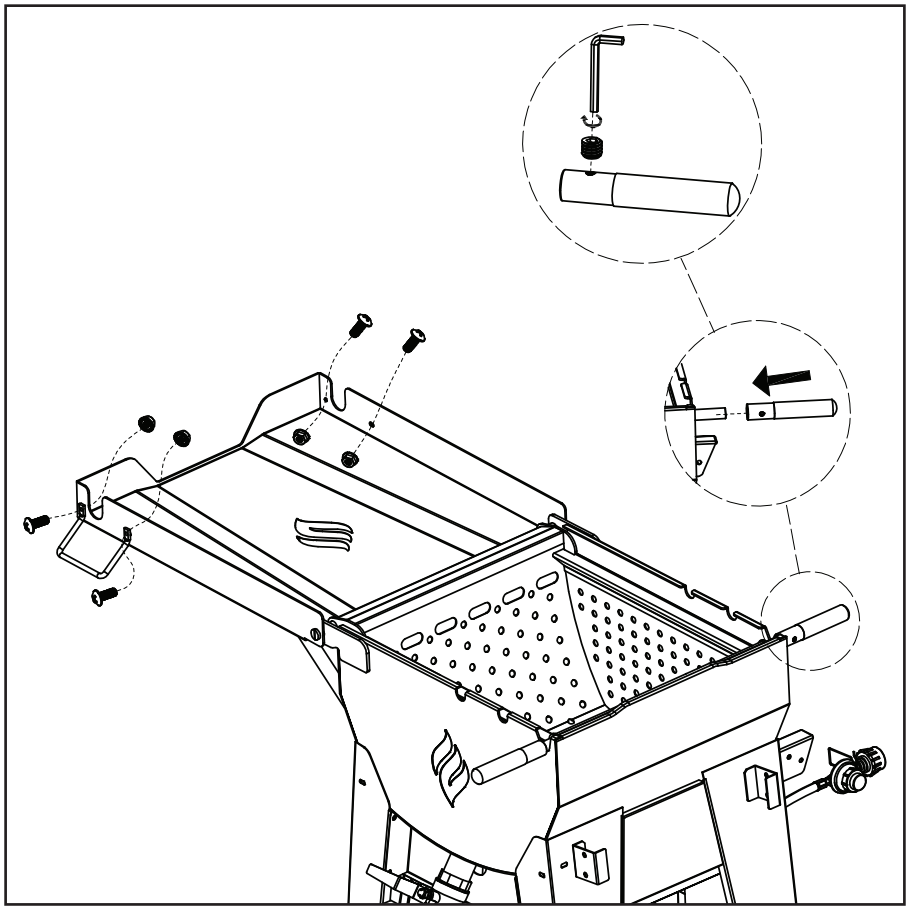

16

Attach lid handles 2 to lid 1 using four M6 x 12 mm SS bolts and M6 SS flange nuts.

Attach basket handles 4 to basket 3 using two M6 hex socket set screws. Hex wrench is included.

17

Attach cart handles 9 to cart assembly using two cleavis pins and secure using two cotter pins

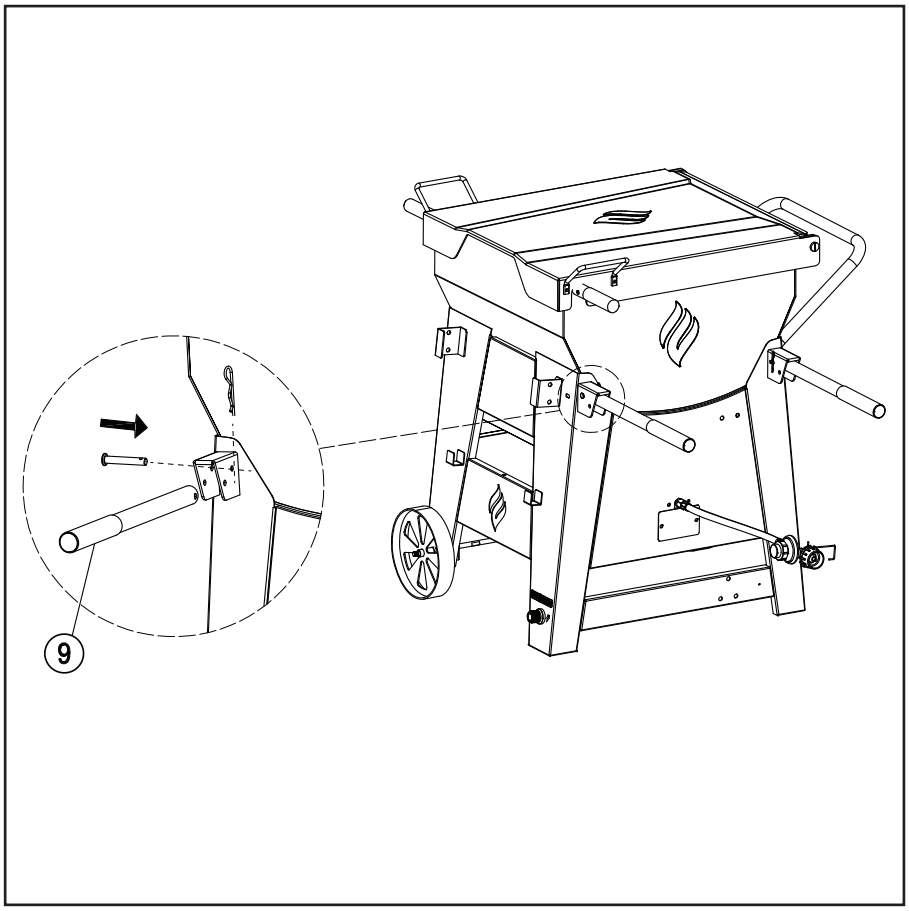

18

Attach upper tank support 17 and lower tank support 20 to right side of cart assembly using four M6 x 12 mm bolts.

Attach lower tank support bracket 19 using two M6 x 12 mm bolts and one M6 flange nut.

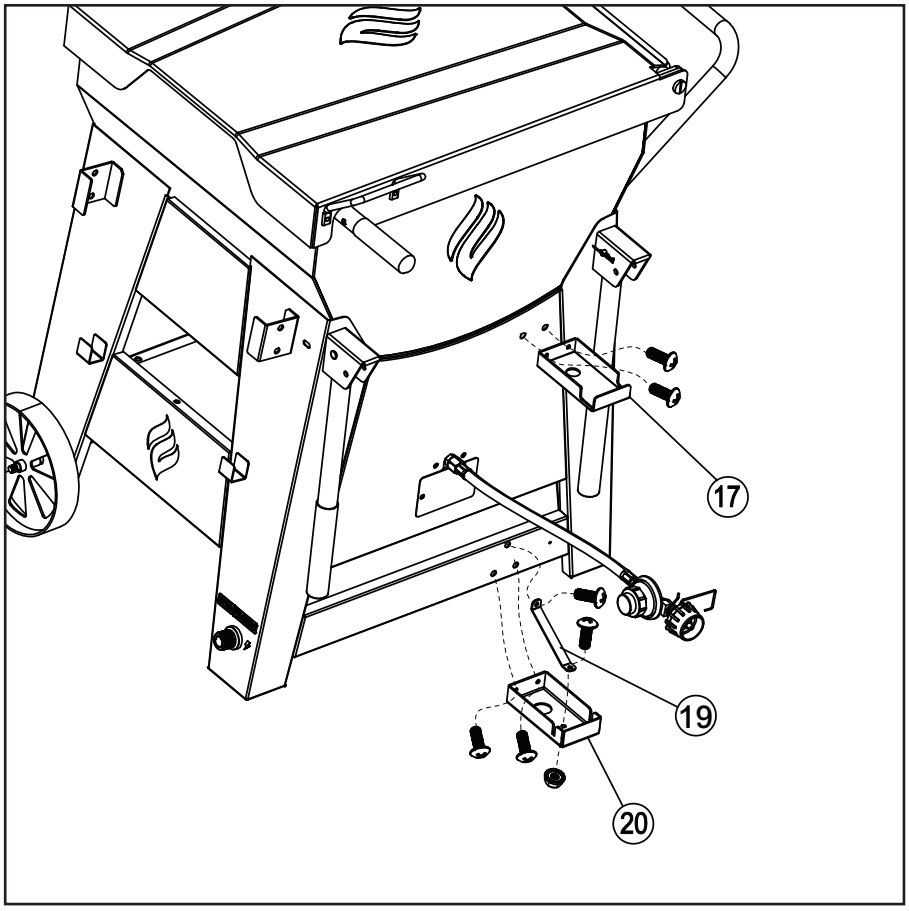

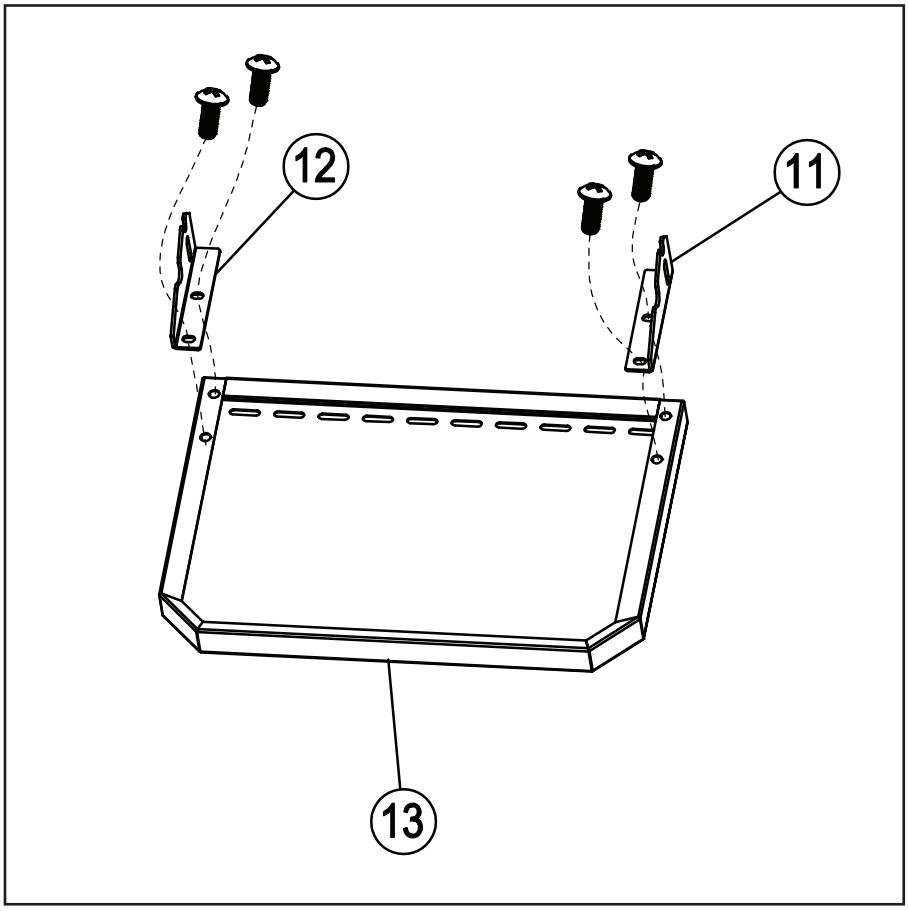

19

Attach left shelf bracket ⑪ and right shelf bracket ⑫ to shelf ⑬ using four M6 x 12 mm bolts.

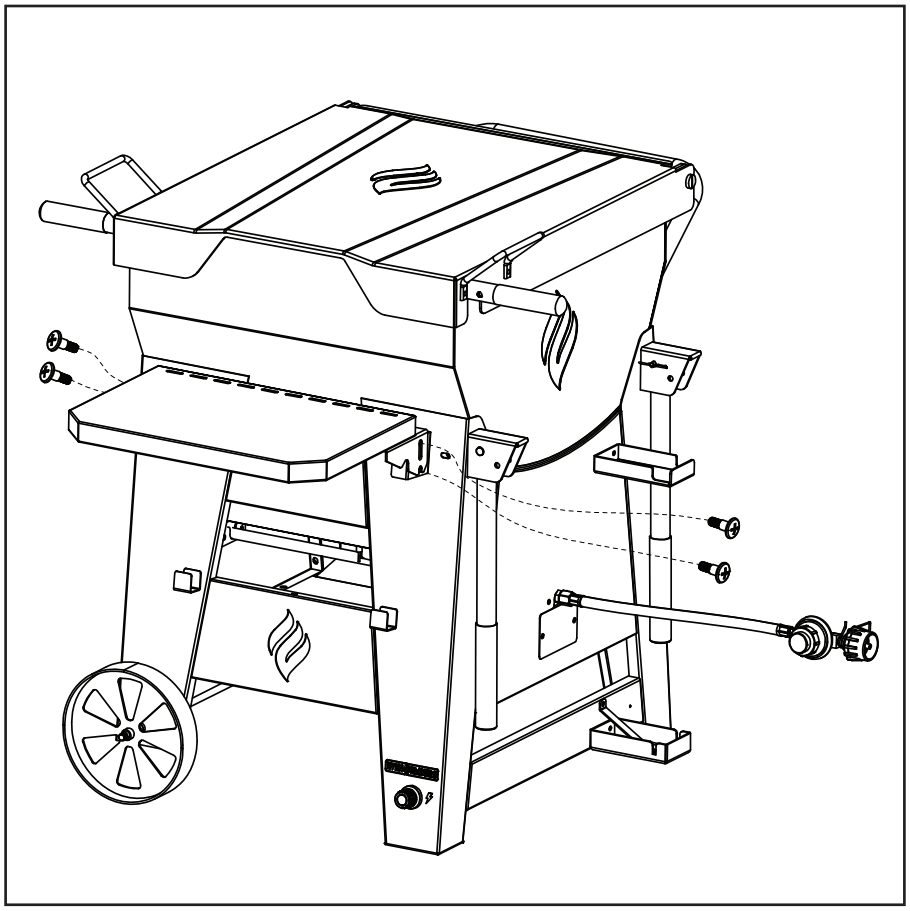

20

Attach shelf brackets ⑪ and ⑫ to control panel using four M6 x 12 mm bolts.

21

Hang stirring paddle 10 on hooks on front panel when not in use.
Note: Remove paddle before using appliance to avoid paddle becoming too hot.

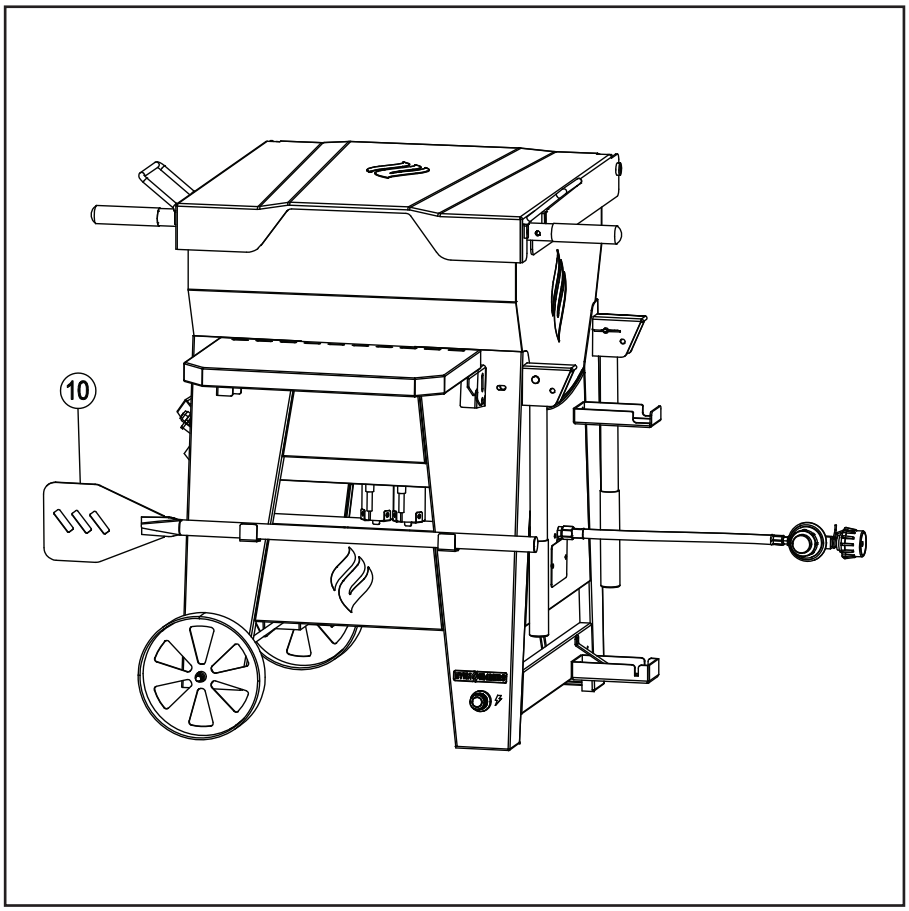

GAS6290AS / GAS6250AS ASSEMBLED

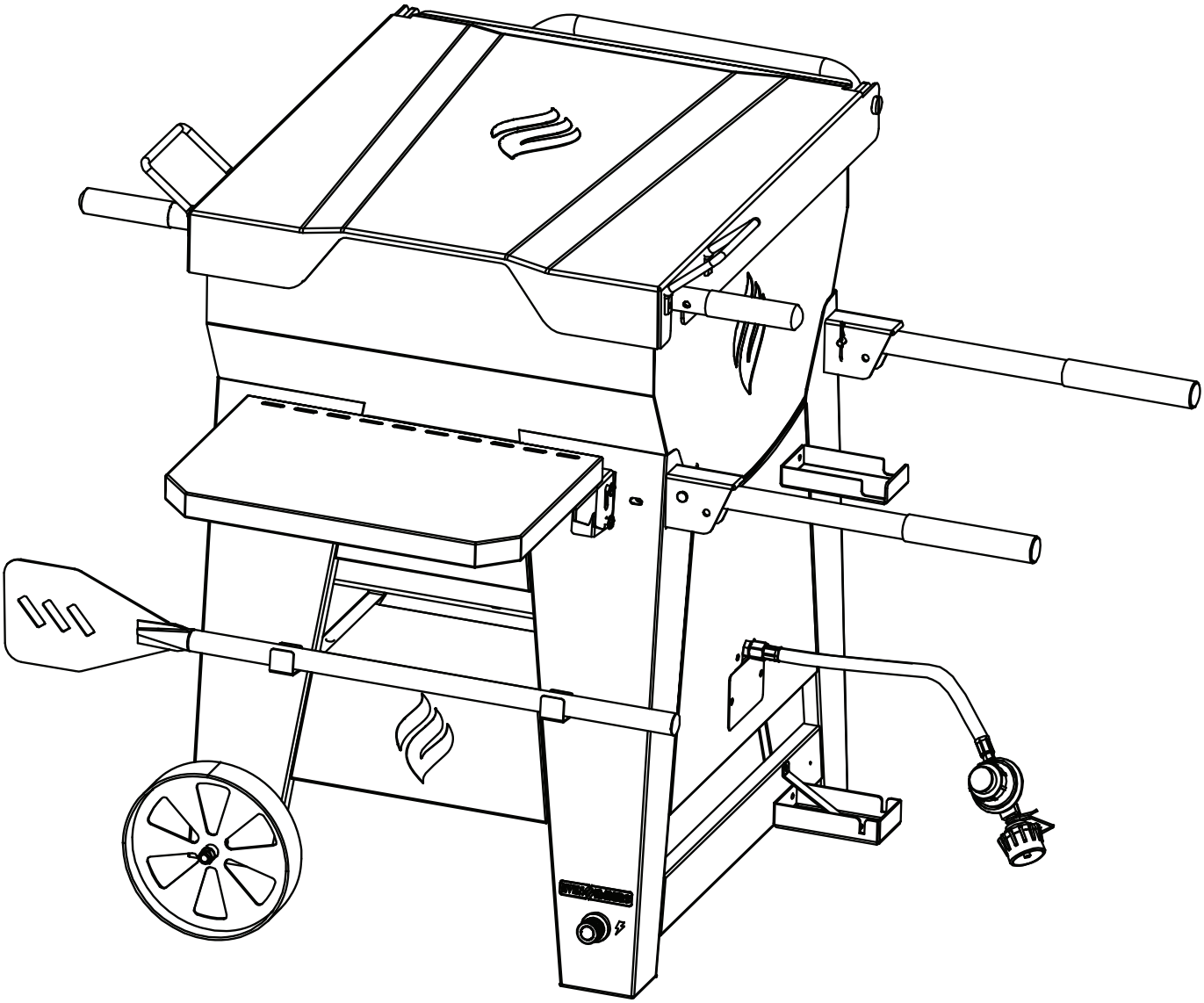

WARRANTY

The Fair Game Group warrants to the original purchaser that the Even Embers Crawfish Boiling Kit is free from defects due to workmanship or materials for:

One-year: on valves, frame, and other related parts

The Fair Game Group's obligations under this warranty are limited to the following guidelines:

- This warranty does not cover gas appliances that have been altered/modified or damaged due to: normal wear, rust, abuse, improper maintenance and/or improper use.
- This warranty does not cover surface scratches, rust or heat damage to the finish, which is considered normal wear.
- The Fair Game Group may elect to repair or replace damaged units covered by the terms of this warranty.
- This warranty extends to the original purchaser only and is not transferable or assignable to subsequent purchasers.

The Fair Game Group requires reasonable proof of purchase. Therefore, we strongly recommend that you retain your sales receipt or invoice. To obtain replacement parts for your Even Embers Crawfish Boiling Kit under the terms of this warranty, please contact Customer Service Department at 1-855-735-9922 or help@fairgameus.com. A receipt will be required. The Fair Game Group will not be responsible for any gas appliances forwarded to us without prior authorization.

EXCEPT AS ABOVE STATED, THE FAIR GAME GROUP MAKES NO OTHER EXPRESS WARRANTY.

THE IMPLIED WARRANTIES OF MERCHANTABILITY AND FITNESS FOR A PARTICULAR PURPOSE ARE LIMITED IN DURATION TO THOSE LISTED ABOVE FROM THE DATE OF PURCHASE. SOME STATES DO NOT ALLOW LIMITATIONS ON HOW LONG AN IMPLIED WARRANTY LASTS, SO THE ABOVE LIMITATION MAY NOT APPLY TO YOU.

ANY LIABILITY FOR INDIRECT, INCIDENTAL OR CONSEQUENTIAL DAMAGES ARISING FROM THE FAILURE OF THE EVEN EMBERS CRAWFISH BOILING KIT TO COMPLY WITH THIS WARRANTY OR ANY IMPLIED WARRANTY IS EXCLUDED. CUSTOMER ACKNOWLEDGES THAT THE PURCHASE PRICE CHARGED IS BASED UPON THE LIMITATIONS CONTAINED IN THE WARRANTY SET OUT ABOVE. SOME STATES DO NOT ALLOW THE EXCLUSION OR LIMITATION OF INCIDENTAL OR CONSEQUENTIAL DAMAGES, SO THE ABOVE LIMITATION OR EXCLUSION MAY NOT APPLY TO YOU. THIS WARRANTY GIVES YOU SPECIFIC LEGAL RIGHTS, AND YOU MAY ALSO HAVE OTHER RIGHTS WHICH VARY FROM STATE TO STATE.