KUCHT
Professional

WWW.KUCHT.COM

BE A **PRO** IN YOUR KITCHEN



PROFESSIONAL-STYLE

GAS RANGE

USER MANUAL

APPLICABLE MODEL: KNG301, KNG361, KNG481, KNG301/LP, KNG361/LP, KNG481/LP, KEG303, KEG363, KEG483, KEG303/LP, KEG363/LP, KEG483/LP

Thank you for purchasing your professional-style Gas Range. We appreciate your business and we recommend that you read this **entire user's manual before operating your new appliance** for the first time.

This manual contains instructions on how to properly install and set up your new range, as well as insights into many of the unique features that our product offers. Please keep this manual for future reference, as it contains the answers to questions that you might have as you begin to cook.

WELCOME TO THE KUCHT FAMILY

CA PROPOSITION 65 The burning of gas cooking fuel generates some chemical by-products which are on the list of substances known by the state of California to cause cancer, birth defects and/or reproductive harm.To minimize exposure to these substances,always operate this unit according to the Owners Manual, ensuring to provide proper ventilation.

Contents

Safety Instructions ..... 4~5

Unpackage instruction 6

Installation Instructions ..... 7~17

Cooktop Operation ..... 18~19

Oven Operation ..... 20~21

Broiler Operation 22

Griddle Operation 23

Care & Cleaning ..... 24~26

Troubleshooting 27

Warranty & Product Registration ..... 28~30

! WARNING

If the information in this manual is not followed exactly, a fire or an explosion may result causing property damage, personal injury or even death.

Do not store or use gasoline, liquid propane cylinder or other flammable vapors and liquids in the vicinity of this appliance.

What to do if you smell gas?

Do not try to light any appliance.

Do not touch any electrical switch.

Do not use any phone in your residence.

Immediately call your gas supplier from a neighbor's phone. Follow the gas supplier's instructions.

If you cannot reach your gas supplier, call the fire department.

For installation and service of your range product, it must be performed by a licensed installer, an approved service agency or your gas supplier.

Definitions

This is a safety alert symbol. It will alert you to potential personal or property safety hazards. Obey all safety messages to avoid any property damage, personal injury or death.

WARNING

WARNING indicates a potentially hazardous situation which, if not avoided, could result in serious injury or death.

CAUTION

CAUTION indicates a moderate hazardous situation which, if not avoided, could result in minor or moderate injury.

CAUTION

CAUTION – when used without the safety alert symbol, indicates a potentially hazardous situation which, if not avoided, could result in property damage.

IMPORTANT

IMPORTANT used for installation, operation and maintenance information that are not related to safety.

If the information in this manual is not followed exactly, a fire or an explosion may result causing property damage, personal injury or even death.

Do not store or use gasoline, liquid propane cylinder or other flammable vapors and liquids in the vicinity of this appliance.

Save this manual for future references.

SAFETY INSTRUCTIONS

What to do if you smell gas?

- Do not try to light any appliance.
- Do not touch any electrical switch.
- Do not use any phone in your residence.
- Immediately call your gas supplier from a neighbor's phone. Follow the gas supplier's instructions.
- If you cannot reach your gas supplier, call the fire department.

IMPORTANT

The installation and service of your range product must be performed by a licensed installer, an approved service agency or your gas supplier.

⚠ WARNING



⚠ WARNING

Tip-Over Hazard

A child or adult can tip the range and be killed.

Verify the anti-tip bracket has been installed.

Ensure the anti-tip bracket is engaged when the range is moved.

Do not operate the range without the anti-tip bracket in place.

Failure to follow these instructions can result in death or serious burns to children and adults.

Show specific manufacturer illustrations for checking installation/engagement of anti-tip brackets.

CONSUMER INFORMATION — THE INSTALLER SHALL NOT REMOVE

Before removing label, ensure anti-tip bracket is properly installed.

To reduce the risk of tipping the appliance, the appliance must be secured by properly installed anti-tip device packed with the appliance.

All ranges can tip and cause injuries.

Install anti-tip device packaged with range

Follow all Installation Instructions.

Make sure the anti-tip bracket is installed:

Slide range forward.

Make sure the anti-tip bracket is securely attached to the wall behind the range.

Safely tilt the front of the range upward slightly and move back against wall, Making sure the pin slides under bracket.

UNPACKING AND HANDLING

WARNING

Extremely Heavy.

Proper equipment and adequate manpower when move the range to avoid personal injury or damage to the unit or the floor. The unit is heavy and rests on adjust able steel legs.

Failure to follow this advice may result in damage or personal injury.

WARNING

DO NOT LIFT THE UNIT BY THE OVEN DOOR HANDLE

SAFETY INSTRUCTIONS

WARNING

Do not store or use gasoline, liquid propane cylinder or other flammable vapors and liquids in the vicinity of this appliance.

The installation and service of your range must be performed by a qualified installer, an approved service agency or the gas supplier.

Gas appliances can cause minor exposure to four of these substances, namely benzene, carbon monoxide, formaldehyde and soot, caused primarily by the incomplete combustion of natural gas fuel. When operating your range on natural gas, the flames from the burners should be blue in color. In addition, the flames should be stable, free of yellow tipping, excessive noise and lifting. However, this yellow tipping should be restricted to the primary flame kernels only. Properly adjusted burners, indicated by a bluish rather than a yellow flame, will minimize incomplete combustion. Exposure to those substances can be minimized by venting with an open window or use of a ventilation fan or hood.

ELECTRICAL GROUNDING INSTRUCTIONS

IMPORTANT

This indoor cooking appliance is equipped with a three-prong (grounding) plug for your protection against shock hazard and should be plugged directly into a properly grounded three-pronged receptacle. DO NOT cut or remove the grounding prong from this plug.

INSTALLATION AND OPERATION INSTRUCTIONS

To ensure proper and safe operation, read all instructions before using the product. Install or locate the product only in accordance with the provided Installation Instructions.

! WARNING

- All servicing should be performed to a qualified technician.
- Do not attempt to adjust, repair, service or replace any part of your appliance unless it is specifically recommended in this guide.
- Do not use the range for warming or heating the room.
- Do not leave children alone or unattended in the area where the range is in use. Never allow them to sit or stand on any part of the range. Do not let children play with the range.
- Have the technician show you the location of the gas shut off valve and how to shut it off in an emergency situation.
- Always disconnect power to appliance before any type of servicing.
- Do not use abrasive or caustic cleaners or detergents on this appliance. They may cause permanent damage to the surface.
- When cooking, set the burner controls so that the flame heats only the bottom of the utensil and does not overlap at the sides of the utensil.
- Utensils (pots and pans) that conduct heat slowly, i.e. glass pots, should be used in conjunction with burner flames at a low or medium setting.
- Turn off all controls and wait for appliance parts to cool down before touching them. Do not touch the burner grates or surrounding areas until cool.
- Do not use water on grease fires.
- Clean appliance with caution.
- Always turn pot handles to the side or back of the range. Do not turn handles towards the area where they can be easily burned. Handles should not extend over the adjacent burners.
- Use the range only for cooking tasks as outlined in this manual. When using the range, do not touch the grates, burner caps, burner bases, or any other parts in proximity to the flame. These components may be hot enough to cause burns.
- Use dry pot holders. Moist or damp pot holders on hot surfaces may result in burns from steam.
- Remove pot holder away from hot surface areas.
- Do not use a towel or other bulky cloth.
- Do not heat unopened food containers. Build up of pressure may cause the container to explode and result in injury.
- During and after use, do not touch interior surfaces of the oven until cool.

INSTALLATION INSTRUCTIONS

IMPORTANT

Keep appliance area clear and free from combustible materials, gasoline, and other flammable vapors.

Gas Supply Requirements

Installation of this range must conform with local codes, or in the absence of local codes, the National Fuel Gas Code, ANSI Z223.1 / NFPA 54. In Canada, installation must conform to the current natural Gas Installation /code, CAN 1-1.1-M81 and with local codes where applicable. This range has been design-certified according to ANSI Z21.1b-201 latest edition.
A statement of the maximum gas supply pressure in accordance with the inlet pressure rating of the gas appliance pressure regulator supplied.

MINIMUM GAS SUPPLY PRESSURE TO APPLIANCE FOR LP GAS—-14.0 IN.W.C.
MINIMUM GAS SUPPLY PRESSURE TO APPLIANCE FOR NG --- 6 IN.W.C.
APPLIANCE REGULATOR IS SET AT 5.0 IN. W.C. OUTLET PRESSURE.

Do not obstruct the flow of combustion air into the range and ventilation air away from the range.

Ventilation: it is recommended that the unit be operated with an oven head, vented exhaust hood of sufficient size and capacity.

Before installing the range, you must locate and secure the included anti-tip bracket to the wall for your range.

⚠CAUTION

The use of cabinets for storage above the appliance may result in a potential fire hazard. Combustible items may ignite; metallic items may become hot and cause burns. If a cabinet storage is to be provided, the risk can be reduced by installing a range hood that projects horizontally a minimum of 5" (12.7cm) beyond the bottom of the cabinets.

⚠ WARNING

The appliance shall not be used for space heating. This information is based on safety considerations. All openings in the wall behind the appliance and in the floor under the appliance shall be sealed.

INSTALLATION INSTRUCTIONS

Dimensions and Clearances

The range may be installed flush to the rear wall. You may install a non-combustible material on the rear wall above the range and up to the vent hood. It is not necessary to install non-combustible materials behind the range below the counter top height.

The minimum distance from the side of the range above the counter top to combustible sidewalls must be at least 10 inches.

INSTALLATION INSTRUCTIONS

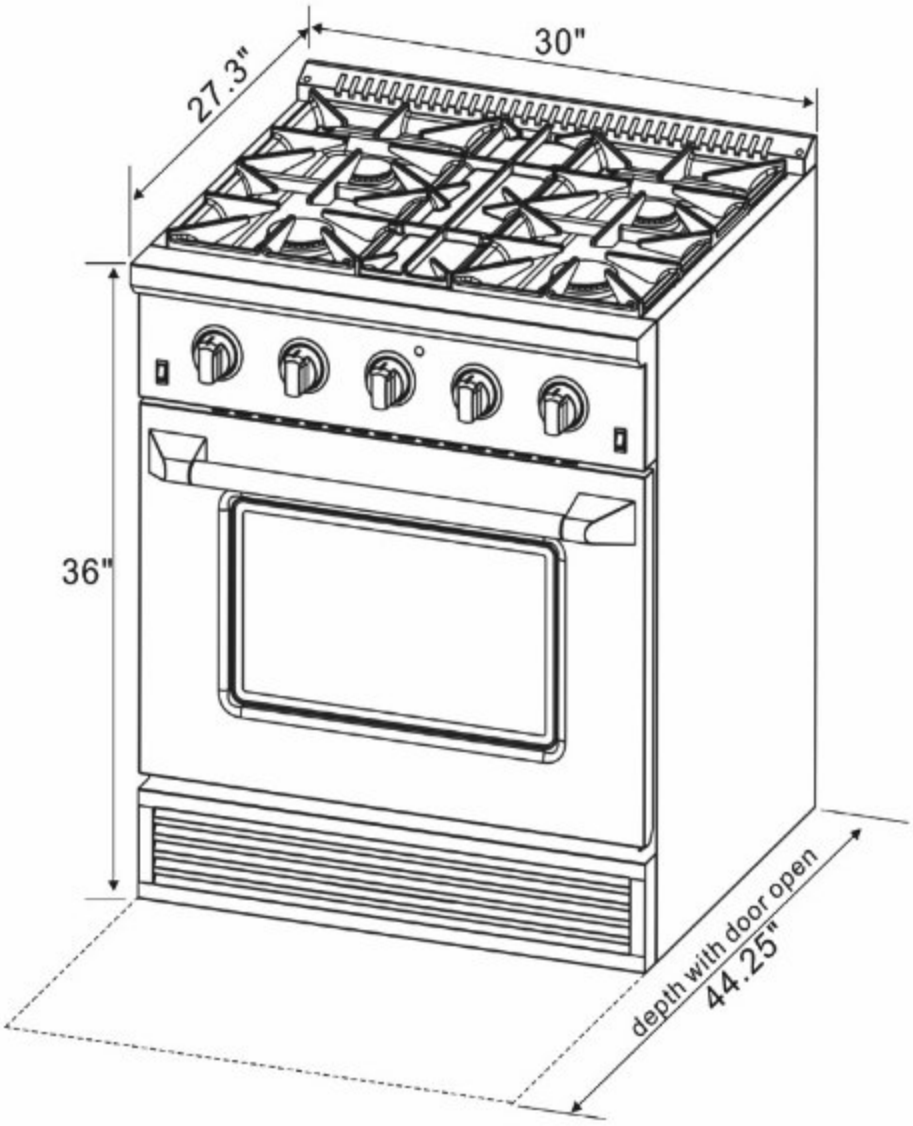

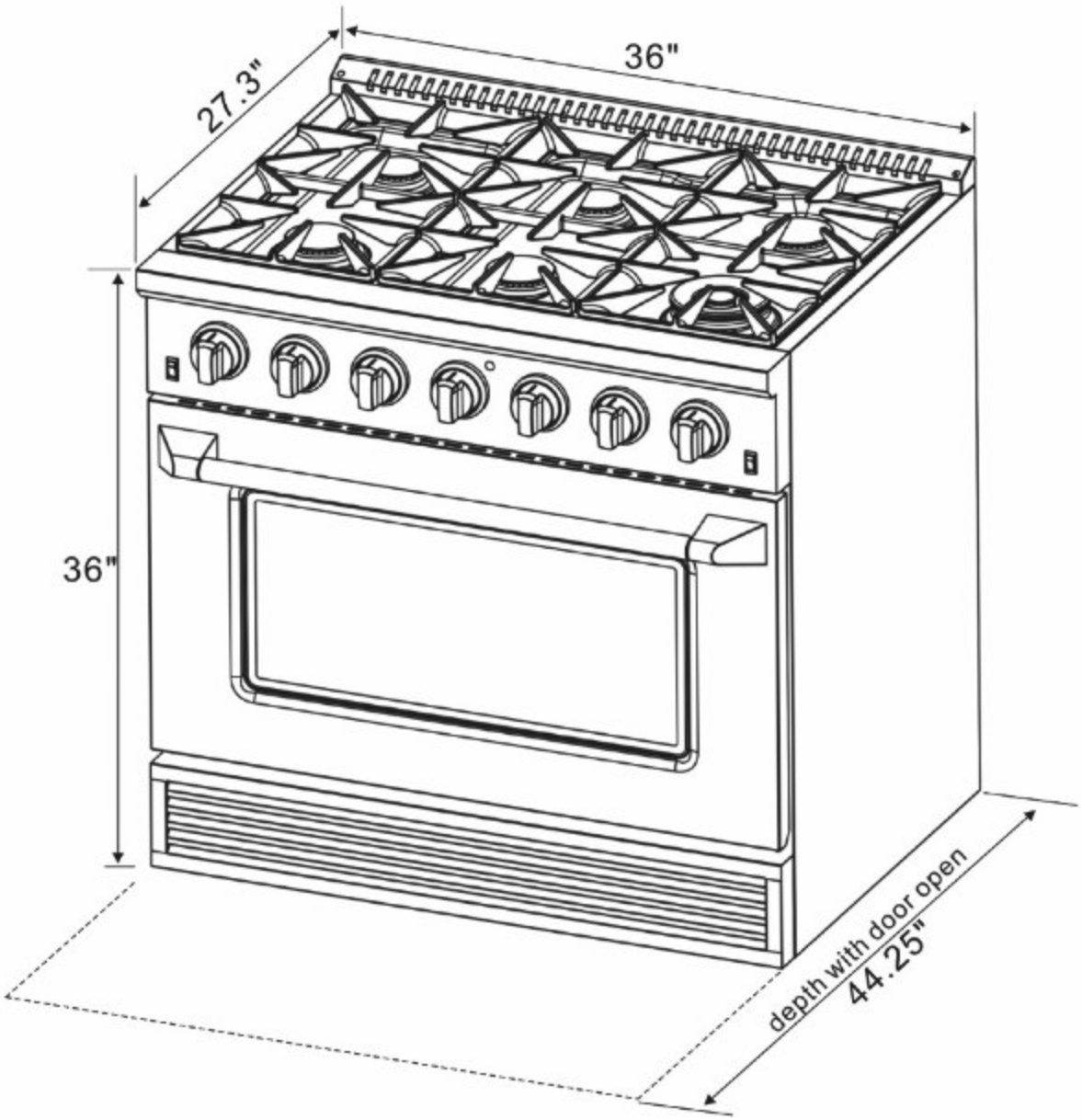
36"
27.3"
36"
depth with door open
44.25"

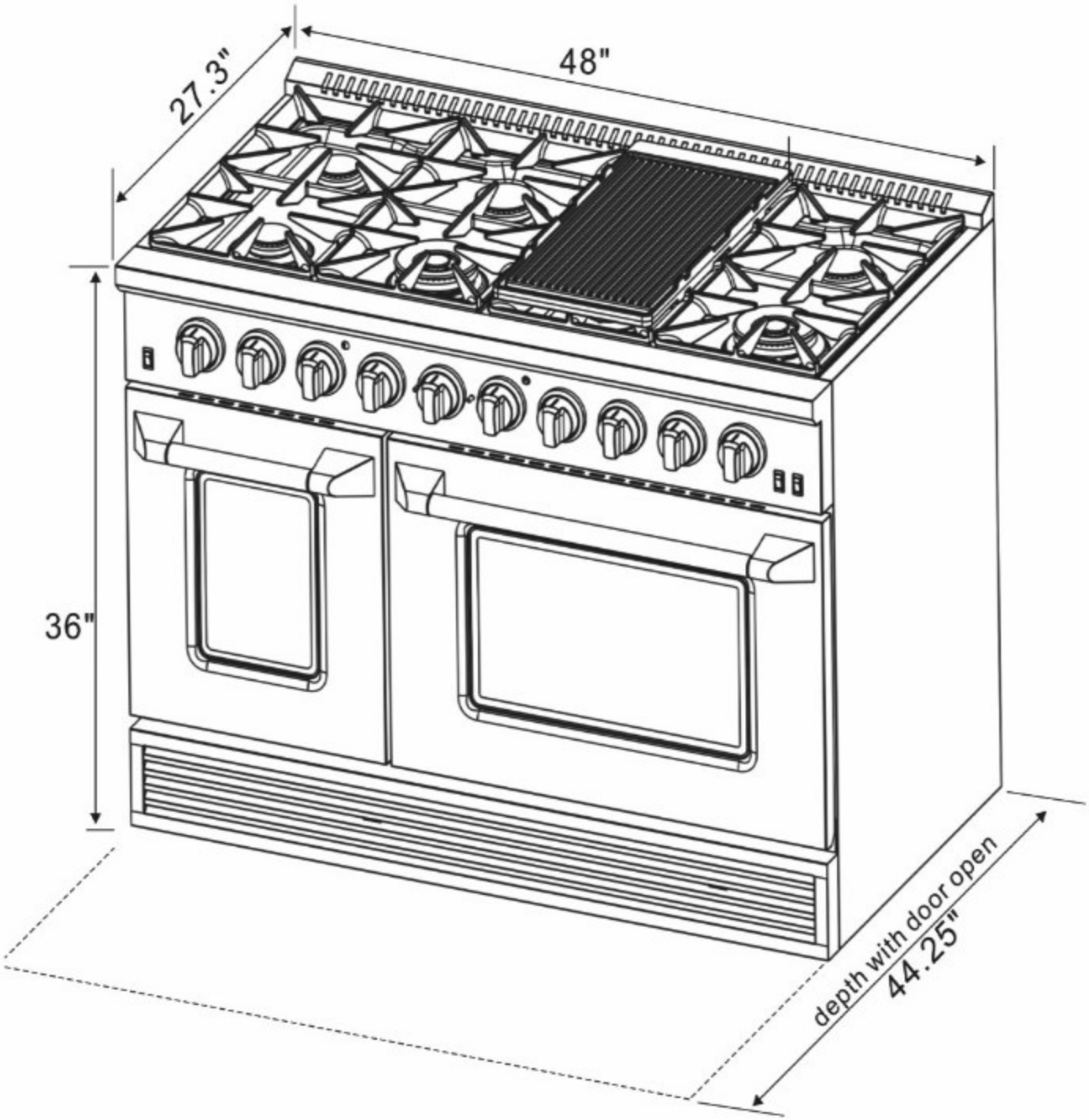
27.3"
48"
36"
depth with door open
44.25"

Installation

Dimensions and Clearances

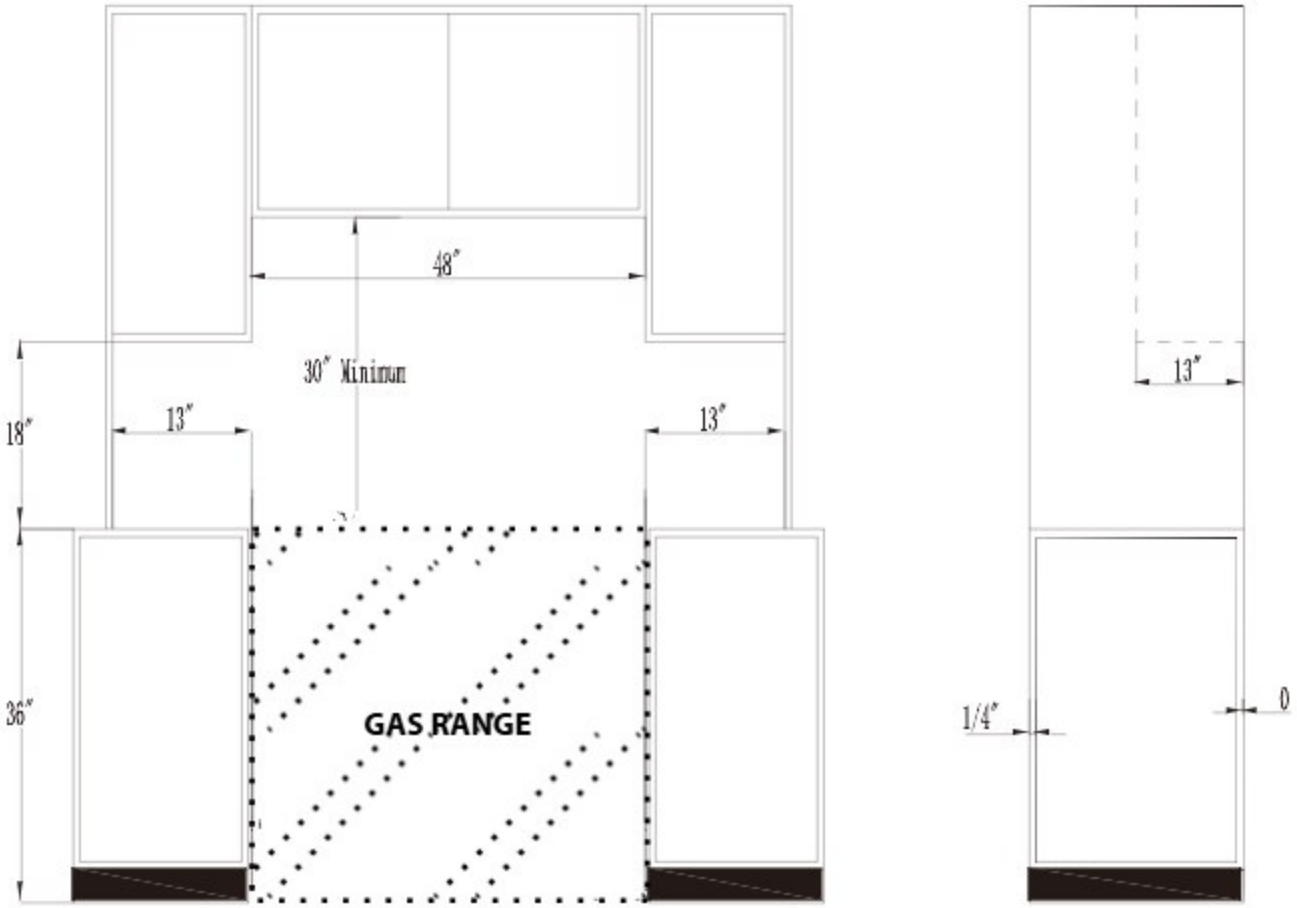

Installation

Electric Power Supply Requirements

Your range must be electrically grounded in accordance with local codes or, in the absence of local codes, in accordance with the National Electrical Code (ANSI/NFPA 70, latest edition). In Canada, electrical grounding must be in accordance with the current CSA C22.1 Canadian Electrical Code Part 1 and/or local codes. A copy of this standard may be obtained from: National Fire Protection Association, 1 Batterymarch Park, Quincy, Massachusetts 02269-9101.

The power supply must be the correct polarity. Reverse polarity will result in continuous sparking of the electrodes, even after flame ignition. If there is any doubt as to whether the power supply has the correct polarity or grounded, have it checked by a qualified electrician.

Use 120V, 60Hz, and properly grounded branch circuit protected by a 15-amp or 20-amp circuit breaker or time delay fuse.

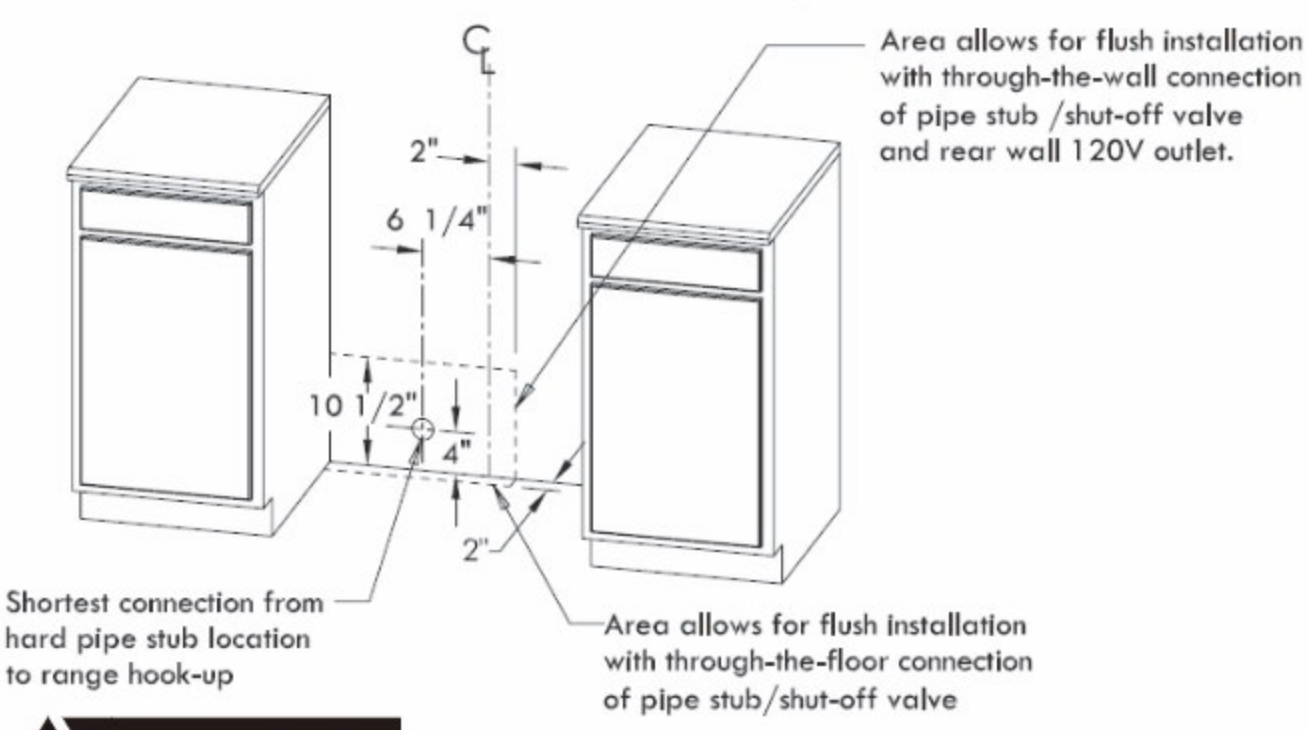

WARNING

Electrical Grounding Instructions: this indoor gas cooking appliance is equipped with a three prong (grounding) plug for your protection against shock hazard and should be plugged directly into a properly grounded three pronged receptacle.

Do Not cut or removes the grounding prong from the plug.

Caution Label all wires prior to disconnection when servicing controls. Wiring errors can cause improper and dangerous operation. Verify proper operation after servicing.

INSTALLATION INSTRUCTIONS

Grounding

- The power cord is equipped with a three-prong (grounding) plug which mates with a standard three-prong grounding wall receptacle to minimize the possibility of electrical shock hazard from the range.
- All cord connected appliance shall include instructions relative to location of the wall receptacle and a warning to the user to disconnect the electrical supply before serving the appliance.
- Where a standard two-prong wall receptacle is encountered, it is the responsibility and obligation of the customer to have it replaced with a properly grounded three-prong wall receptacle. Do not cut or remove the grounding prong from the power cord.

Connect Range to Gas Supply

- Install a manual gas line shut-off valve in the gas line in an easily accessed location outside the range in the gas piping external to the appliance for the purpose of turning on or shutting off gas to the appliance.

- Install male ½" flare union adapter to ½" NPT internal thread elbow at inlet of regulator. On models equipped with standard twin burners, install the male pipe thread end of the ½" flare union adapter to the ½" NPT internal thread at inlet of pressure regulator. Use a wrench on the regulator fitting to avoid damage.

- Install male ½" or ¾" flare union adapter to the NPT internal thread of the manual shut-off valve, taking care to secure the shut-off valve to keep it from turning.

- The gas supply pressure for checking the regulator setting is 6in (Natural Gas) and 11inch（LP gas） connect flexible gas line connector to the regulator on the range. Position range to permit connection at the shut off valve.

INSTALLATION INSTRUCTIONS

- When all connections have been made, check that all range controls are in the “off” position and turn on the main gas supply valve.

- Leak testing of the appliance shall be conducted according to the manufacture’s instructions .Use some soap water (50% water and 50% soap) or a leak detector at all joints and connections to check for leaks in the system. Do not use a flame to check for gas leaks.

  The appliance must be isolated from the building’s gas supply piping system by closing its individual manual shut off valve during any pressure testing of the gas supply piping system at test pressure equal to or less than ½ psig (3.5kPa).

COOKTOP OPERATION

Surface Burner Ignition



Push to release gas. **Turn to Ignite and 'Hi' position.** **Adjust to appropriate flame height.**

To light the surface burners, push and turn the appropriate control knob counter clockwise to a "Hi" position. You will hear a clicking noise – the sound of the electric spark igniting the burner.

Once burner ignition has been achieved, turn the burner control knob to adjust the flame size. If the knob stays at "Hi", it will continue to click.

NOTE: When one burner is turned to the "Hi" position, all the burners will spark. Do not attempt to disassemble or clean around any burner while another burner is on. Do not touch any burner cap, burner base, or igniter while the igniters are sparking.

Heat Settings:

Hi	Ignites the burners.
Simmer	Melting small quantities, steaming rice, warming food, melting chocolate or butter.
Low	Melting large quantities.
Low-Medium	Low-temperature frying, simmering large quantities, heating milk, cream sauces, gravies.
Medium	Sautéing and browning, braising, pan-frying, maintaining slow boil on large quantities.
Medium – Hi	High-temperature frying, pan boiling, maintaining slow boil on large quantities.
Hi	Boiling liquid quickly, deep frying.

Cooktop Operation

Simmer and Boil

- A smaller flame will give the best simmer results. Small flames offer precise cooking performance for delicate foods, keeping food warm, melting chocolate or butter, and for cooking that need to cook over low heat for a long time.
- The highest (larger) flame settings provide the maximum heat that is available on your range. This setting should be used for heavy cooking loads such as water boiling and pasta cooking.

Flame Size

- When you select the flame size, watch the flame when you turn the knob.
- Any flame larger than the bottom of the cookware is wasted.
- The flame should be steady and blue in color. Foreign material in the gas line may cause an orange flame during initial operation.

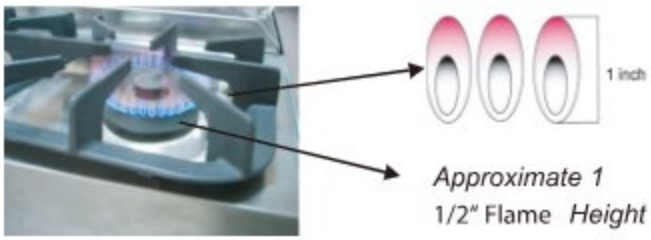

Power Failure

- If the gas does not ignite within four seconds, turn off the valve and allow at least five minutes for any gas to dissipate. Repeat the lighting procedure.
- If the power fails, the surface burners can be lighted manually. Hold a lighted match near a burner and turn knob counterclockwise to "HI". After burner lights, turn knob to setting.

Cooktop

- To prevent the cooktop from discoloring or staining, clean cooktop after each use, and wipe up acidic or sugary spills as soon as the cooktop has cooled.
- The sealed burners of your range are not secured to the cooktop and are designed to be removed. Boil overs or spills will not seep underneath the cooktop. The burners should be cleaned after each use.

Cooktop Operation

Oven Vent

- Do not block the ducts at the rear of the range when cooking in the oven. It is important that the flow of hot air from the oven and fresh air into the oven burner never be interrupted. Avoid touching the vent opening or nearby surfaces during oven or broiler operation – they may become hot.

WARNING

FOOD SAFETY

According to the United States Department of Agriculture: DO NOT hold foods at temperatures between 40°F to 140°F more than 2 hours. Cooking raw foods below 275°F is not recommended.

WARNING

Never use this appliance as a space heater to heat or warm the room, Doing so many result in carbon monoxide poisoning and overheating of the oven. Never use this appliance as a storage space and storage cabinet areas

WARNING

Never use this appliance doors or drawers such as stepping.
Leaning or setting on the doors or drawers, may result in hazards and injuries

Burner Grates

1. The grates must be properly positioned before cooking. Improper installation of the grates may result in scratching of the cooktop and / or poor combustion.
2. Do not operate the burners without a pan or utensil on the grates

Oven Operation

WARNING

Never cover any slots, holes or passages in the oven bottom or cover an entire rack with materials such as aluminum foil. Doing so blocks air flow through the oven and may cause carbon monoxide poisoning. Aluminum foil lining may also trap heat, causing a fire hazard. Do not use Aluminum Foil on any porcelain surface. Doing so will cause damage the porcelain that affect the life of the porcelain

Oven Function

Natural Airflow Bake occurs when heat is transferred into the oven from the bake burners in the bottom of the oven cavity. Heat is then circulated by natural airflow. This is a traditional bake setting.

Infrared Broil

The broil burner is located at the top of the oven. This burner heats the metal screen until it glows. The glowing screen produces the infrared heat, searing the outside of broiled foods and sealing in juices.

Convection Bake

Heat is transferred from the bake burners in the bottom of the oven cavity to the oven cavity itself. The convection fan in the rear of the oven then circulates it. This convection process provides more even heat distribution throughout the oven cavity. Multiple rack use is possible for the large baking jobs. Convection cooking is faster, can be accomplished at lower temperatures and provides more even temperatures than regular cooking.

NOTE

The oven-knob displayed temperature is set to match the oven temperature with the convection mode on. When using the oven with the convection feature off, the temperature inside the oven could be between 25 to 50 degrees lower than the knob indicates.

Convection Roast

The convection fan circulates the heated air evenly over and around the food. The heated air seals in juices quickly for a moist and tender product, while at the same time creating a rich golden brown exterior.

Convection Defrost

With temperature control off, the motorized fan in the rear of the oven circulates air. The fan accelerates natural defrosting of the food without heat. To avoid illness and food waste, do not allow defrost food to remain in the oven for more than two hours without being cooked.

Convection Dehydrate

With the temperature control on 175°F, warm air is radiated from the bake burners in the bottom of the oven cavity and is circulated by a motorized fan in the rear of the oven. Over a period of time, the water is removed from the food by evaporation. Removal of water inhibits growth of microorganisms and retards the activity of enzymes.



BEFORE BAKING OR BROILING

The oven and broiler should be turned on to burn off the manufacturing oils. Turn the oven on to 450°F (230°C) for 20 to 30 minutes; then turn the oven knob to "Broil" for the same **length of time. You may wish to turn on the ventilator above your range at this time**

Broiler Operation

Note: Door must be closed during broiling operation.

Broiling is a method of cooking tender cuts of meat directly under the infrared broiler in the oven . Broiling in the oven is accomplished with the oven door closed. It is normal and necessary for some smoke to be present to give the food a broiled flavor.

Preheating

Preheating is suggested when searing rare steaks (Remove the broiler pan before preheating with the infrared broiler. Foods will stick on hot metal). To preheat, turn the "Oven" selector knob to the "Broil" position. Wait for the burner to become hot, approximately 2 minutes. Preheating is not necessary when broiling meat well-done.

To Broil

Broil one side until the food is browned; turn and cook on the second side. Season and serve. Always pull the rack out to the "stop" position before turning or removing food.

Setting Broil

The "Oven" selector knob controls the Broil feature. When broiling, heat radiates downward from the oven broiler for even coverage. The Broil feature temperature is 500˚F (260˚C).

Griddle Operation

Before Using the Griddle

1. Clean the griddle thoroughly with warm, soapy water to remove dust or any protective coating.
2. Rinse with clean water and wipe off to dry with soft, clean, lint-free towel/cloth.
3. A stainless steel cover that is sized to fit on top of the surface when the griddle is not being used is provided. Please note – the cover must be removed before turning the griddle on.
4. Make sure the grease tray is under the front edge of the griddle. Position the tray under the griddle overhang to catch grease or food residue.

Use of the Griddle

1. Push and turn the control knob counter-clockwise to the preferred cooking temperature.
2. Preheat the griddle for 10-12 minutes
3. When the griddle is preheated to the desired temperature, the indicator light will turn on.
4. Butter or cooking oil can be added for more flavor, then place the food to cook.

CAUTION:
The surface of the griddle is hot after use. Please allow sufficient time for the griddle to cool prior to cleaning.

When using the appliance or the first time, the oven and broiler burners should be turned on the burn off the manufacture oils. Turn the oven on the 450 [230 for 20 to 30 minutes, then turn the oven control knob to "Broil" for the same length of time. It is recommended to turn on the ventilator above the range at this time

WARNING

Before Baking or Broiling the oven and broiler should be turned on to burn off the manufacturing oils. Turn the oven on to 450°F (230°C) for 20 to 30 minutes; then turn the broiler to "Broil" for the same length of time. You may wish to turn on the ventilator above your range at this time.

Care and Cleaning

Cooktop

- To avoid electrical shock or burns, turn off all controls and ensure the cooktop is cool before cleaning.
- Before cleaning the cooktop, ensure that all burners are turned off and that all components are cool enough to safely touch.
- Do not use harsh or abrasive cleaning agents, waxes, polishes, or commercial cooktop cleaners to clean the cooktop.
- Use only a sponge, soft cloth, fibrous or plastic brush, and nylon pad for cleaning.
- Always dry components completely before using the cooktop.

Control Panel, Door Handle, Control Housing

- Clean the control panel, door handle and control housing with a solution of mild detergent and warm water.
- Do not use abrasive cleaners or scrubbers; they will permanently damage the finish.
- Dry the components with a soft, lint-free cloth.

Oven Window

- Clean all glass surfaces with a solution of mild detergent and hot water. Use a mild glass cleaner to remove fingerprint or smears.
- Dry completely with a soft, lint-free cloth.

Porcelain Surfaces

- Clean oven interior and inner door liners with a solution of mild detergent and hot water. Rinse and dry with a soft cloth. Do not use abrasives or commercial oven cleaners.

Stainless Steel Surfaces

- Do not use any cleaning product containing chlorine bleach.
- Do not use a steel-wool pad; it will scratch the surface.
- Use a hot, damp cloth with a mild detergent. Use a clean, hot, damp cloth to remove soap. Dry with a dry, clean cloth.

Care and Cleaning

Metal Finishes

- Wash with soap and water, glass cleaner, or mild liquid sprays.

Plastic Finishes

- When control panel trim and end caps are cool, clean with soap and water, rinse and dry.
- Use a glass cleaner and soft cloth.

Oven Racks

- Clean oven racks with solution of detergent and hot water. To clean heavy soil, use a scouring pad such as steel wool with plenty of water.

Oven Frame

- Clean with hot water, soap-filled steel-wool pads or cleaners. Rinse well with clean water and dry.

Oven Gasket

- Do not clean the gasket. The fiberglass material of the oven door gasket cannot withstand abrasion.
- It is necessary for the gasket to remain intact.

Replacing the Oven Light

- Turn off the power at the main power supply.
- Remove the lens cover from the housing by pulling straight out.
- To prevent electrical shock or personal injury, make sure the oven and light bulb are cool and power to the oven has been turned off before replacing the light bulb. Make sure the lens cover is in place when using the oven.

Outer Oven Door

- Use soap and water to thoroughly clean the top, sides and front of the oven door. Rinse well. You may also use a glass cleaner to clean the glass on the outside of the door.
- Do not use oven cleaners, cleansing powders of harsh abrasives on the outside of the door.

Inner Oven Door

- Do not allow excess water to run into any holes or slots in the door. Any soap left on the liner causes additional stains when the oven is heated.
- Before you call for service, please review the potential problem / possible causes and remedies shown in the table below.

Troubleshooting

Before you call for service, please review the potential problem / possible causes and remedies shown in the table below.

Nothing works	Oven is not connected to the electrical power.	Have oven connected to a properly sized electrical power supply by a qualified electrician.
	Power supply is not energized.	Have an electrician check the power supply, including the house circuit breaker, wiring and fuses
Top burners do not light or do not burn evenly	Plug on range is not completely inserted in the electrical outlet.	Make sure the unit is properly connected to the power supply
	Burner holes on the side of the burner may be clogged.	Remove the burner heads and clean them. Check the electrode area for burned-on food or grease.
Burner flames very large and yellow.	Burner bezel ports are clogged.	Clean burner bezel ring ports with straightened paper clip, needle, or wire.
	Burner ports or burner caps are not positioned properly.	Remove and carefully re-install burner bezel and caps.
	Cooktop is being operated with the wrong type of gas.	Ensure that the type of cooktop matches the natural gas supply.
	Regulator is not installed, is faulty, or is set for the wrong type of gas.	Check installation, replace regulator, or set regulator for proper gas.
Sparking but no flame ignition.	Gas shut-off valve is in the 'OFF' position.	Turn shut-off valve to the 'ON' position.
Igniters spark continuously after flame ignition.	Power supply polarity is reversed.	Have polarity corrected.
	Igniters are wet or dirty.	Dry or clean igniters.
Burner flame goes out at low setting.	Low gas supply pressure.	Contact gas company.
	Air intake holes around knobs are obstructed.	Remove obstruction.
Oven will not heat	Oven settings are not corrected	Follow mode selection and clock settings as specified in Oven Operation section of the manual.
Foods over-cooked or under-cooked	Incorrect cooking time or temperature.	Adjust time, temperature, or rack position.
'Cracking' or 'Popping' sound.	This is the sound of metal heating and cooling.	This is normal.



The main objective of KUCHT is to meet the needs and expectations of our customers. For this reason, all our products are subjected to rigorous security and quality controls to be above the North American safety standards.

KUCHT Warranty covers defects in Parts and Labor for functional parts that are the result of normal usage for a period of time of 4 Years for Parts and Labor in the U.S. and 2 years for Parts and Labor in Canada from date of purchase.

Functional parts are those components parts that are critical to the performance of the product's essential function.
Nonfunctional parts are those that are not critical like knobs, handles, or cosmetic parts. KUCHT will repair or replace the unit or any parts, therefore, as required, subject to these terms and conditions.

Warranty Exclusions
The Kucht LLC Limited Warranty covers residential installations only and is non-transferable to any other party.
Warranty is void when the product is installed in common areas where more than a single party has rightful access to its use or in locations considered beyond normal residential use.
Warranty does not apply to products installed in any commercial or non-residential application. Examples of excluded applications include, but are not limited to day care centers, schools, bed and breakfast centers, churches, private clubs, fire stations, club houses, common areas in multi-family dwellings, restaurants, bakeries, hotels, nursing homes, food service locations and institutional food service locations.

For more information visit https://kucht.com/online/warranty/
Or scan the following QR code.

Register your Product:

Visit https://kucht.com/online/warranty/ and register your product now, you will get: unlimited online support, a free official kucht professional apron, and the chance to win many prices!