Use & Care Manual

With Installation Instructions for the Installer

Electric Residential Hybrid Water Heater

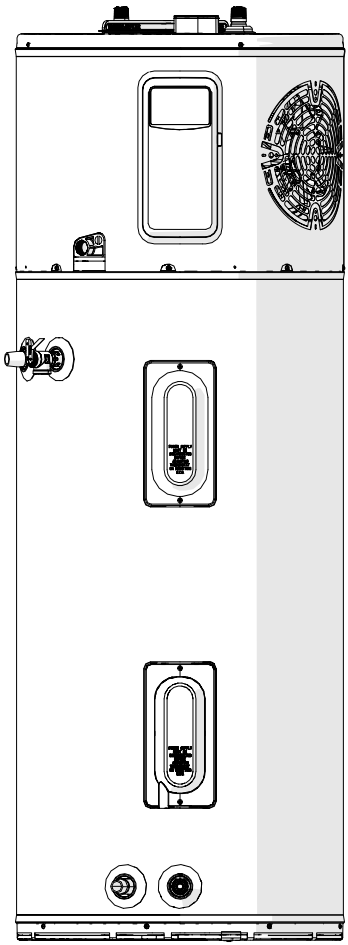

The purpose of this manual is twofold: one, to provide the installer with the basic directions and recommendations for the proper installation and adjustment of the water heater; and two, for the owner–operator, to explain the features, operation, safety precautions, maintenance and troubleshooting of the water heater. This manual also includes a parts list.

It is imperative that all persons who are expected to install, operate or adjust this water heater read the instructions carefully so they may understand how to perform these operations. If you do not understand these instructions or any terms within it, seek professional advice.

Any questions regarding the operation, maintenance, service or warranty of this water heater should be directed to the seller from whom it was purchased. If additional information is required, refer to the section on “If you need service.”

DO NOT destroy this manual. Please read carefully and keep in a safe place for future reference.

Recognize this symbol as an indication of Important Safety Information!

© 2024 Rheem Sales Company Inc.

AP23657 Rev 01

Safety Information
Safety Precautions 3-4

Installation Instructions
Location 5
Duct Ready Connection . . 9
Thermal Expansion 10
Water Connections. 10
Condensate Drain 10
Typical Installation . . 11-12
Shutoff Valve 12
Recirculation System. . . . 13
To Fill the Water Heater . 14
LeakGuard 14
Self Check 14
Electrical Connections. . . 14
Pipe Insulation 16
Ducting Requirements. . . 17
Installation Checklist. . . . 20

Operating Instructions
Safety Controls 21
Water Temperature 21
Local Startup 22-25
EcoNet App 26, 27

Care and Cleaning
Draining 28
Maintenance. 28
Extended Shut-Down . . . 29

Troubleshooting Tips
Before You Call
For Service. . . . . 30.
Troubleshooting
alarm code 31-34

Customer Service
CTA Module Wiring 35
JA13 Offline Schedule
Battery Replacement. 36, 37
Replacement Parts . . . 38-40
Cavity Insert. 41
Wiring Diagram. 42
If You Need Service . . . 44



FOR YOUR RECORDS

Write the model and serial numbers here:

#

#

You can find them on a label on the appliance.

Staple sales slip or cancelled check here.

Proof of the original purchase date is needed to obtain service under the warranty.



READ THIS MANUAL

Inside you will find many helpful hints on how to use and maintain your water heater properly. Just a little preventive care on your part can save you a great deal of time and money over the life of your water heater.

You'll find many answers to common problems in the Before You Call For Service section. If you review our chart of Troubleshooting Tips first, you may not need to call for service at all.



READ THE SAFETY INFORMATION

Your safety and the safety of others are very important. There are many important safety messages in this manual and on your appliance. Always read and obey all safety messages.

This is the safety alert symbol. Recognize this symbol as an indication of Important Safety Information!

This symbol alerts you to potential hazards that can kill or hurt you and others.

All safety messages will follow the safety alert symbol and either the word "DANGER", "WARNING", "CAUTION" or "NOTICE".

These words mean:

DANGER	**An imminently hazardous situation that will result in death or serious injury.**
WARNING	**A potentially hazardous situation that could result in death or serious injury and/or damage to property.**
CAUTION	**A potentially hazardous situation that may result in minor or moderate injury.**
NOTICE:	**Attention is called to observe a specified procedure or maintain a specific condition.**

IMPORTANT SAFETY INFORMATION. READ ALL INSTRUCTIONS BEFORE USING.

⚠DANGER!

WATER TEMPERATURE SETTING

Safety and energy conservation are factors to be considered when selecting the water temperature setting of water heater. Water temperatures above 125°F (52°C) can cause severe burns or death from scalding. Be sure to read and follow the warnings outlined on the label pictured below. This label is also located on the water heater near the thermistor access panel.

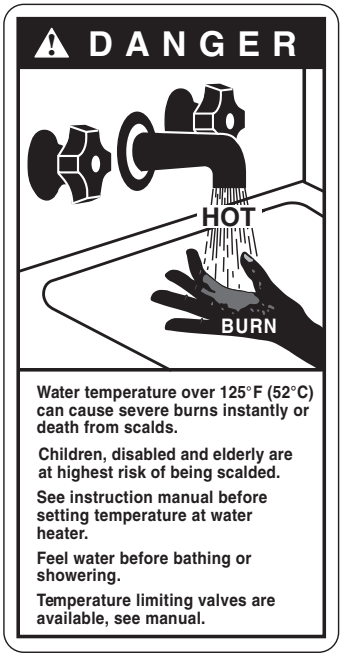

NOTICE: Mixing valves are recommended for reducing point of use water temperature by mixing hot and cold water in branch water lines. It is recommended that a mixing valve complying with the Standard for Temperature Actuated Mixing Valves for Hot Water Distribution Systems, ASSE 1017 be installed.

When used in demand response applications a thermostatic mixing valve conforming to ASSE 1017 shall be installed on the hot water supply line following all manufacturer installation instructions. See page 13 for additional installation information.

Time/Temperature Relationship in Scalds

Temperature	Time To Produce a Serious Burn
120°F (49°C)	**More than 5 minutes**
125°F (52°C)	**1½ to 2 minutes**
130°F (54°C)	**About 30 seconds**
135°F (57°C)	**About 10 seconds**
140°F (60°C)	**Less than 5 seconds**
145°F (63°C)	**Less than 3 seconds**
150°F (65°C)	**About 1½ seconds**
155°F (68°C)	**About 1 second**

Table courtesy of Shriners Burn Institute

The chart shown above may be used as a guide in determining the proper water temperature for your home.

⚠DANGER: Households with small children, disabled, or elderly persons may require a 120°F (49°C) or lower thermostat setting to prevent contact with "HOT" water.

The temperature of the water in the heater is regulated by the water heater interface control. To comply with safety regulations the temperature was set at 120°F (49°C) before the water heater was shipped from the factory. This temperature setting corresponds to the default "ENERGY SAVER" mode.

The illustration below shows the water temperature setting.

Refer to the Operating Instructions section of this manual for detailed instructions on how to adjust water temperature settings and change operating modes.



⚠DANGER: Hotter water increases the potential for Hot Water SCALDS.

IMPORTANT SAFETY INFORMATION. READ ALL INSTRUCTIONS BEFORE USING.

⚠ WARNING!

For your safety, the information in this manual must be followed to minimize the risk of fire or explosion, electric shock, or to prevent property damage, personal injury, or loss of life.

Be sure to read and understand the entire Use and Care Manual before attempting to install or operate this water heater. It may save you time and cost. Pay particular attention to the Safety Instructions. Failure to follow these warnings could result in serious bodily injury or death. Should you have problems understanding the instructions in this manual, or have any questions, STOP, and get help from a qualified service technician, or the local electric utility.

FOR INSTALLATIONS IN THE STATE OF CALIFORNIA

California Law requires that all new and replacement water heaters, and all existing residential water heaters, must be braced, anchored, or strapped to resist falling or horizontal displacement due to earthquake motion. At a minimum, any water heater shall be secured in accordance with the California Plumbing Code, or modifications made thereto by a city, county, or city and county pursuant to Section 17958.5. Generic instructions for California titled "Guidelines for Earthquake Bracing Residential Water Heaters" can be obtained by:

- **Writing the California, Department of General Services, Division of State Architect, 1102 Q Street, Suite 5100, Sacramento, CA 95814**
- **Calling (916) 445-8100**
- **Following web address: https://www.dgs.ca.gov/-/media/Divisions/DSA/Publications/gas_shutoff/waterheaterbracing**

SAFETY PRECAUTIONS

Have the installer show you the location of the circuit breaker and how to shut it off if necessary. Turn off the circuit breaker if the water heater has been subjected to overheating, fire, flood, physical damage or if the ECO (temperature limiting control) fails to shut off.



- Read this manual entirely before installing or operating the water heater.
- Use this appliance only for its intended purpose as described in this Use and Care Manual.



- Be sure your appliance is properly installed in accordance with local codes and the provided installation instructions.
- **DO NOT** attempt to repair or replace any part of your water heater unless it is specifically recommended in this manual. All other servicing should be referred to a qualified technician.
- **DO NOT** attempt to repair or replace the compressor, refrigerant, or any part associated with the sealed refrigerant system.
- **DO NOT** turn on the electrical supply or operate this water heater unless it is completely full of water.

⚠ WARNING!

Disconnect all power to unit before starting maintenance. Failure to do so can cause electrical shock resulting in severe personal injury or death.

⚠ WARNING!

FLAMMABLE CONTENTS UNDER PRESSURE. The compressor is not a serviceable part. The compressor wiring terminals may arc allowing pressurized refrigerant and oil to escape, ignite and cause serious bodily injury, severe burns or death.

READ AND FOLLOW THIS SAFETY INFORMATION CAREFULLY.

SAVE THESE INSTRUCTIONS

Refrigerant

This Hybrid Water Heater is factory charged with an environmentally friendly, non-chlorinated refrigerant, R134A. This refrigerant has zero ozone depletion potential.

Installing the water heater

The location chosen for the water heater must take into consideration the following:

Local Installation Regulations

This water heater must be installed in accordance with these instructions, local codes, utility codes, utility company requirements or, in the absence of local codes, the latest edition of the National Electrical Code. It is available from some local libraries or can be purchased from the National Fire Protection Association, Batterymarch Park, Quincy, MA 02269 as booklet ANSI/NFPA 70.

Canadian installations should refer to CSA22.1, a copy can be purchased from the Canadian Standards Association, 5050 Spectrum Way, mississauga,ONT L4W 5N6

Inspect Shipment

Inspect the water heater for possible damage. Check the markings on the rating plate of the water heater to be certain the power supply corresponds to the water heater requirements. Rating plate is located on front of water heater.

Location

Locate the water heater in a clean dry area as near as practical to the area of greatest heated water demand. Long un-insulated hot water lines can waste energy and water.

Place the water heater in such a manner that the thermistor and element access panels can be removed to permit inspection and servicing such as removal of elements or checking controls.

The water heater and water lines should be protected from freezing temperatures. **DO NOT** install the water heater in outdoor, unprotected areas.

Make certain the floor underneath the water heater is strong enough to sufficiently support the weight of the water heater once it is filled with water.

Floor isolation kit is recommended to minimize vibrations (where applicable).

⚠CAUTION: The water heater should not be located in an area where leakage of the tank or connections will result in damage to the area adjacent to it or to lower floors of the structure. Where such areas cannot be avoided, it is recommended that a suitable drain pan, adequately drained, be installed under the water heater.

NOTICE: Installation in a confined space will lead to higher power consumption if adequate ventilation is not provided.

It is recommended that the hybrid water heater be installed where ambient temperatures **DO NOT** exceed 145°F (63°C).
Insufficient air exchange will result in increased energy consumption levels.

Clearances		
Rear	Sides	Top
0"	0"	6"

NOTICE: Auxiliary drain pan MUST conform to local codes.

Drain Pan Kits are available from the store where the water heater was purchased, or any water heater distributor.

Drain Pan should not obstruct cold inlet or drain valve.

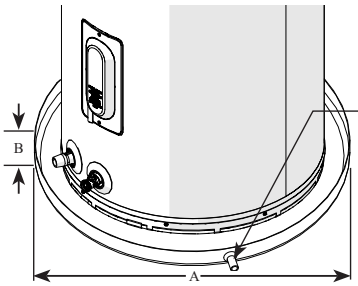

Installing the water heater

Location (cont.)

NOTICE: Read this page before continue.

All the space area requirement specified are the unoccupied space under installation section.

Unoccupied space means free air space excluding other objects like furniture, appliances or other objects that will occupy the room volume.

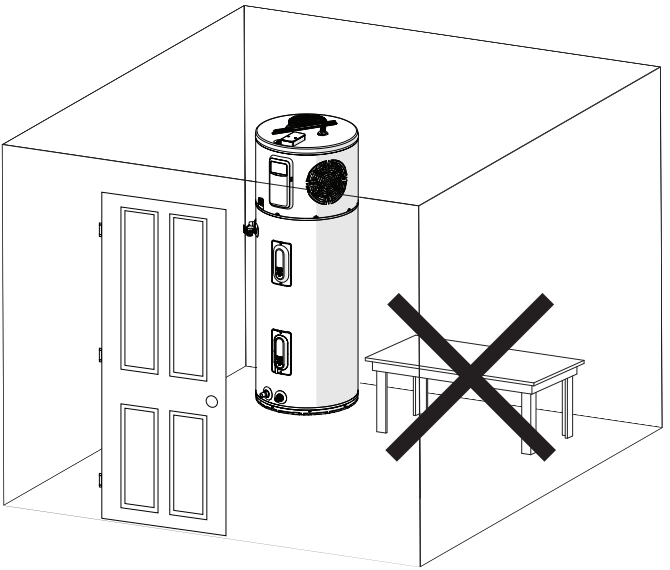

Installing the water heater

Locations that provide optimal efficiency

Heater: Not Ducted

Room size: Larger than 700 ft^3 (e.g. 7' x 10' x 10').
Requirements: No additional ventilation needed.

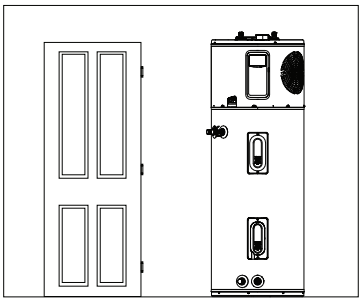

Heater: Not Ducted

Room size: Smaller than 700 ft^3 (e.g. 7' x 10' x 10').
Requirements: Full louvered door OR two louvers top and bottom. See below.

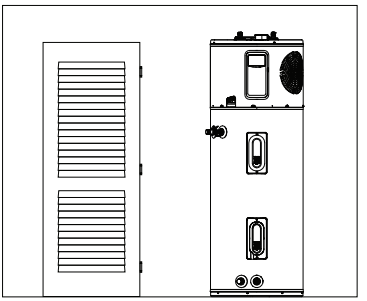

Heater: Not ducted

Room size: Small closet.
Requirements:

* Air gap under door equal to 18 in^2 (0.75" clearance).
* Louver must be located the same height on door as the air exhaust on heater.
* Heater air exhaust must be positioned toward louver within one foot of door.

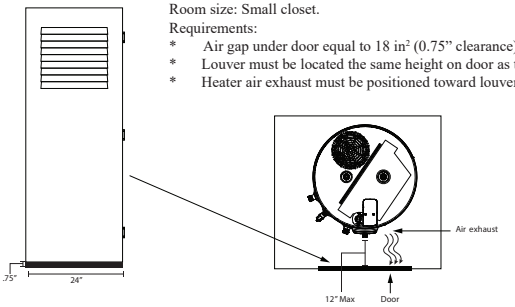

Heater: Ducted with inlet OR outlet duct

Room size: Any size room.
Requirements: Air gap under door equal to 18 in^2 (0.75" clearance)..

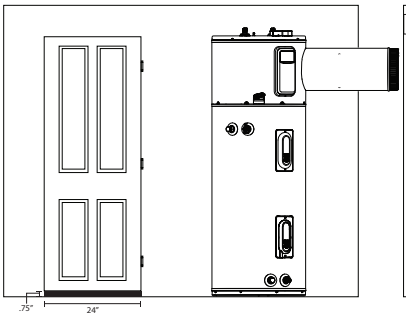

Heater: Ducted with inlet AND outlet duct

Room size: Any size room.
Requirements: No additional ventilation needed.

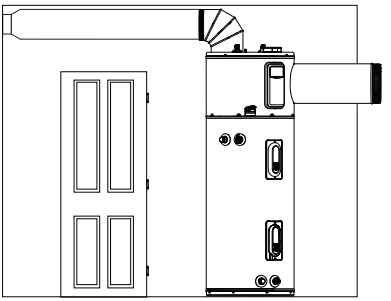

NOTE: *Heat pump water heater will operate in rooms less than 700 ft^3 down to 450 ft^3 but at reduced energy efficiency and reduced performance output. Reduced energy efficiency and performance has not been evaluated by Rheem Manufacturing and not recommended for optimal performance of the unit. When unit is operated in a small enclosure, a door or wall with a minimum of 2.3 sq ft of louvers is recommended to provide proper air changes for unit function.*

Installing the water heater

For installation in the state of California

California Law requires that all new and replacement water heaters, and all existing residential water heaters, must be braced, anchored, or strapped to resist falling or horizontal displacement due to earthquake motion. At a minimum, any water heater shall be secured in accordance with the California Plumbing Code, or modifications made thereto by a city, county, or city and county pursuant to Section 17958.5. Generic instructions for California titled “Guidelines for Earthquake Bracing Residential Water Heaters” can be obtained by:

- Writing the California, Department of General Services, Division of State Architect, 1102 Q Street, Suite 5100, Sacramento, CA 95814
- Calling (916) 445-8100
- Following web address: https://www.buildingincalifornia.com/wp-content/uploads/2014/02/waterheaterbracing_08-11-04.pdf

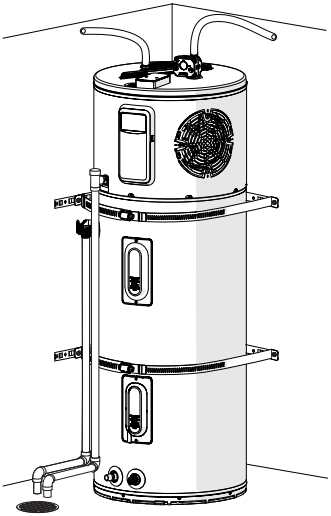

Installing the water heater

Duct Ready Connection

Fold the tabs with screw driver. All the tabs need to be bended 90°.

Place the duct on the air Inlet/Outlet and connect it to the tabs using screws, connect at least three tabs to the duct.

OUTLET VENT (10" DUCT READY DESIGN)

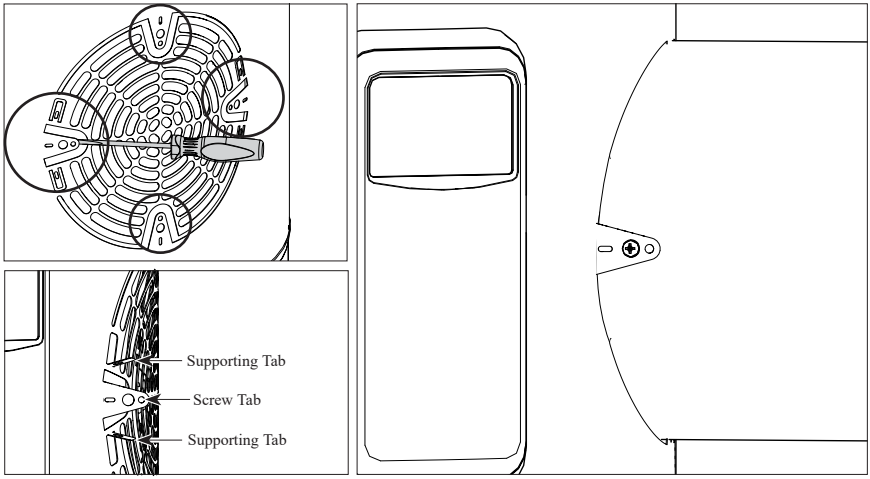

INLET AIR (8" READY DESIGN)

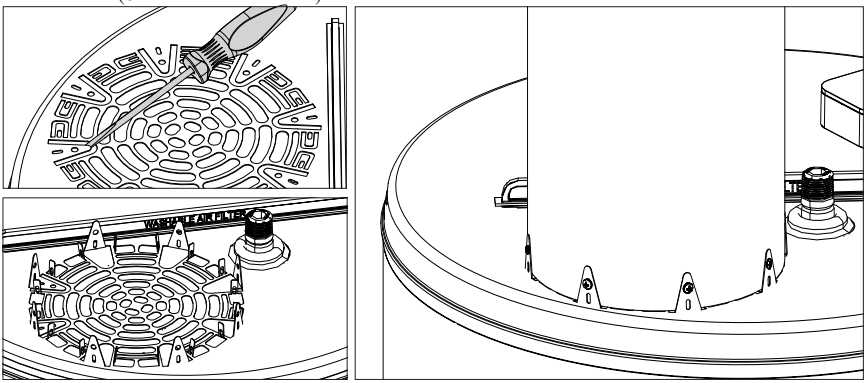

NOTE: Ducts need to be supported by straps according to local codes. Ducts should not be supported by heat pump water heater.

If tab's coating gets damaged during the bending process, add additional coating to avoid corrosion.

Installing the water heater

Thermal Expansion

Determine if a check valve exists in the inlet water line. Check with your local water utility. It may have been installed in the cold water line as a separate back flow preventer, or it may be part of a pressure reducing valve, water meter or water softener. A check valve located in the cold water inlet line can cause what is referred to as a **"closed water system"**. A cold water inlet line with no check valve or back flow prevention device is referred to as an **"open"** water system.

As water is heated, it expands in volume and creates an increase in the pressure within the water system. This action is referred to as **"thermal expansion"**. In an **"open"** water system, expanding water which exceeds the capacity of the water heater flows back into the city main where the pressure is easily dissipated.

A **"closed water system"**, however, prevents the expanding water from flowing back into the main supply line, and the result of **"thermal expansion"** can create a rapid and dangerous pressure increase in the water heater and system piping. This rapid pressure increase can quickly reach the safety setting of the relief valve, causing it to operate during each heating cycle. Thermal expansion, and the resulting rapid and repeated expansion and contraction of components in the water heater and piping system can cause premature failure of the relief valve, and possibly the heater itself. Replacing the relief valve **WILL NOT** correct the problem!

The suggested method of controlling thermal expansion is to install an expansion tank in the cold water line between the water heater and the check valve (refer to the illustration on the next page). The expansion tank is designed with an air cushion built in that compresses as the system pressure increases, thereby relieving the over pressure condition and eliminating the repeated operation of the relief valve. Other methods of controlling thermal expansion are also available. Contact your installing contractor, water supplier or plumbing inspector for additional information regarding this subject.

Water Supply Connections

NOTICE: The side connect the inlet and outlet water nipple remain with the black markings pointed up.

Refer to the illustration on the next page for suggested typical installation. The installation of flexible connectors is recommended on the hot and cold water connections. Flexible connections provide vibration isolation and allow the water heater to be easily disconnected for servicing if necessary. The **HOT** and **COLD** water connections are clearly marked and are 3/4in. NPT on all models. Install a shut-off valve in the cold water line near the water heater.

See page 14 on "To Fill The Water Heater".

NOTICE: DO NOT apply heat to the HOT or COLD water connections. If sweat connections are used, sweat tubing to adapter before fitting adapter to the water connections on heater. Any heat applied to the water supply fittings will permanently damage the dip tube and/or heat traps.

Condensate Drains

Consult local codes or ordinances for specific requirements. Refer to page 5.

NOTICE: Condensate from this unit is not Acidic and is not required to be neutralized.

IMPORTANT: When making drain fitting connections to the drain tubing, use a thin layer of piping tape or silicone and install hand tight.

IMPORTANT: When making drain fitting connections to the drain tubing, **DO NOT** overtighten. Overtightening fittings can split pipe connections on the drain pan.

- This unit is equipped with a 3/4" NPT female primary condensate connection. Use MIP fittings for connections.
- **DO NOT** reduce drain line size less than connection size provided on condensate drain.
- All drain lines must be pitched downward away from the unit a minimum of 1/8" per foot of line to ensure proper drainage.
- Drain lines must include a P-trap if connected to a sewer pipe.
- If no drain is available, then a common condensate pump with a capacity no less than 2 gallon per day must be installed.
- **DO NOT** allow condensate to drain into the water heater drain pan.
- The drain line should be insulated where necessary to prevent sweating and damage due to condensate forming on the outside surface of the line.

Installing the water heater

Typical Installation (Top Connect)

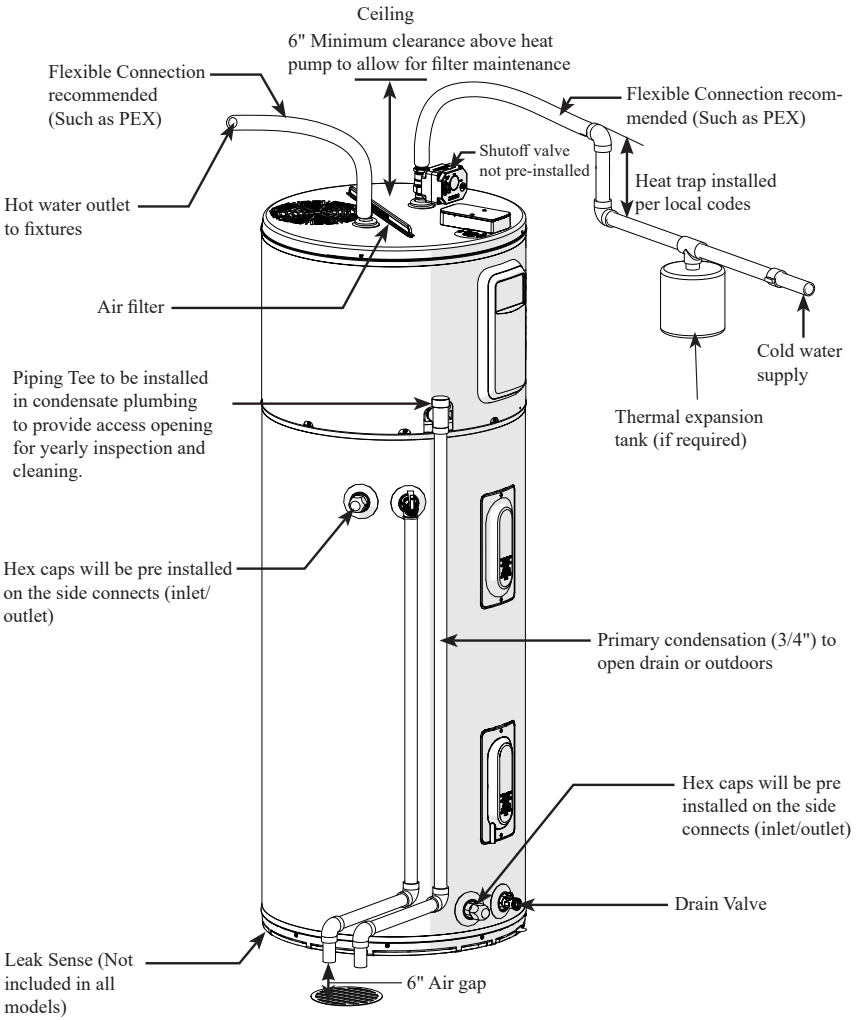

Installing the water heater

Typical Installation (Side Connect)

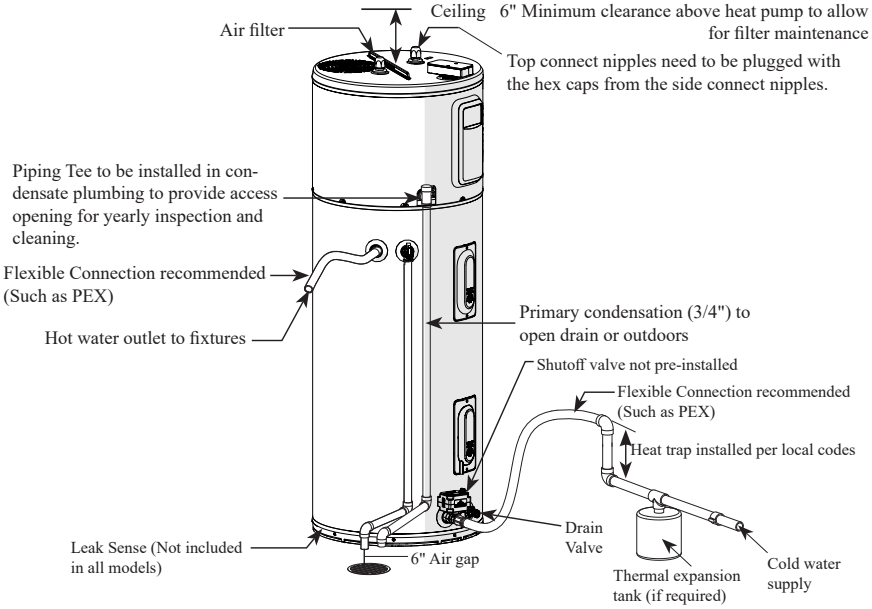

NOTE: 40 Gallons unit has a different configuration for the top connect nipples, but installation will be the same.

Shutoff Valve

The shut off valve is not pre-installed. Install the shut off valve as close as possible to the unit, following the instructions below.

Top Connect

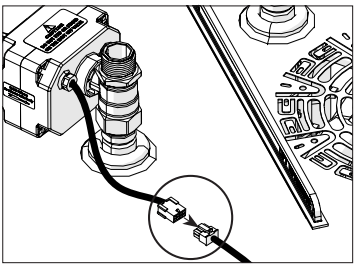

Use jumper cable provided in the shut off valve box for the connection.

Side Connect

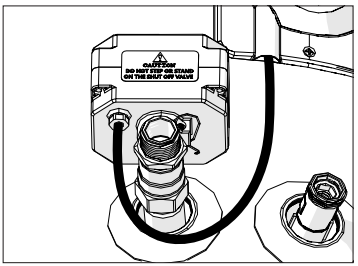

Jumper cable is not needed.

NOTE: Check for water leaks after installation.

Installing the water heater

Guidelines for Installing a Heat Pump Water Heater with an On-Demand Recirculation System

⚠DANGER: water temperatures above 120°F can cause severe burns instantly or death from scalds.

An on-demand recirculation system or pump can be used with a Rheem heat pump water heater. The recirculation system or pump must comply with local and state codes (and CA Title 24 Guidelines when installed in CA).

Hot water supply and return piping insulation with R-value of at least 7.7 is strongly recommended to save energy and minimize electrical usage, extending the water heater's life. Please refer to your local code for insulation values.

Installation Parameters:

- On-demand recirculation system should include temperature sensors; recommended return temperature should be 102°F
- Dedicated return line or cross-over valve can be used (refer to manufacturer's installation instructions)
- On-demand pump flow rate should not exceed 6gpm; recommended flow rate is 3gpm
- Refer to your on-demand recirculation pump manufacturer for all installation instructions

NOTICE:

- Failure to follow these instructions might result in less available hot water and/or lower the unit's performance and efficiency, increasing energy / utility consumption.
- Depending on conditions associated with the specific application, anticipated energy savings could be significantly impacted.
- Using an uncontrolled recirculation loop may cause the water heater to run excessively.
- Be sure the water heater is properly installed in accordance with local codes and the provided installation instructions.

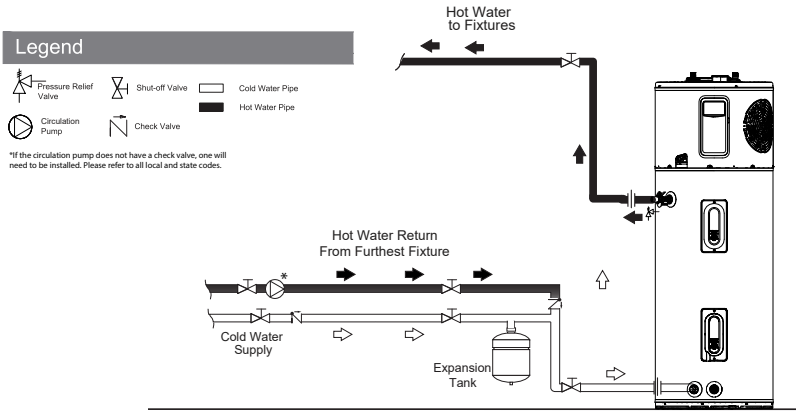

Installing the water heater

A new combination temperature and pressure relief valve, complying with the Standard for Relief Valves for Hot Water Supply Systems, ANSI Z21.22/CSA 4.4, is factory installed and must remain in the opening provided and marked for the purpose on the water heater. No valve of any type should be installed between the relief valve and the tank.

Relief Valve

⚠WARNING: The pressure rating of the relief valve must not exceed 150 PSI, the maximum working pressure of the water heater as marked on the rating plate.

The btu/h rating of the relief valve must not be less than the input rating of the water heater as indicated on the rating label located on the front of the heater (1 watt=3.412 btu/h).

Connect the outlet of the relief valve to a suitable open drain so that the discharge water cannot contact live electrical parts or persons and to eliminate potential water damage.

Piping used should be of a type approved for hot water distribution. The discharge line must be no smaller than the outlet of the valve and must pitch downward from the valve to allow complete drainage (by gravity) of the relief valve and discharge line. The end of the discharge line should not be threaded or concealed and should be protected from freezing. No valve of any type, restriction or reducer coupling should be installed in the discharge line.

⚠WARNING: DO NOT connect other plumbing to the T&P plumbing; it must go directly to a suitable open drain. DO NOT connect the T&P plumbing to the condensate plumbing.

To Fill the Water Heater

⚠WARNING: DO NOT turn on the electrical supply or operate this water heater unless it is completely full of water. The tank must be full of water before water heater is turned on. The water heater warranty does not cover damage or failure resulting from operation with an empty or partially empty tank.

Make certain the drain valve on the water heater is completely closed.

Open the shut-off valve in the cold water supply line.

Open each hot water faucet slowly to allow the air to vent from the water heater and piping.

A steady flow of water from the hot water faucet(s) indicates a full water heater.

LeakGuard™

⚠WARNING: Failure to follow the instructions provided in this manual may permanently damage the unit and void the manufacturer's warranty.

If the water heater is equipped with built-in leak detection and automatic water shut off valve. The leak detection device (LeakSenseTM) detects the presence of water and immediately alerts the electronic control as the EcoNet app on the cellular phone. When water is detected, the electronic controls will shut down the heating elements and the automatic water shut off valve closes.

Self Check

The automatic water shut off valve has a self check feature which runs every 30 days once the water heater is powered on. This feature works by closing and reopening the automatic water shut off valve. In case the valve fails to reopen, the water heater will be DISABLED. The water heater gives alert when the automatic water shut off valve fails to close.

NOTE: The shut off valve is not pre-installed.

EcoNet™ Communication

EcoNet™ communication is provided for integration with home automation, energy management, and demand response systems. Connectivity is provided through the via wireless (Wi-Fi).

Installing the water heater

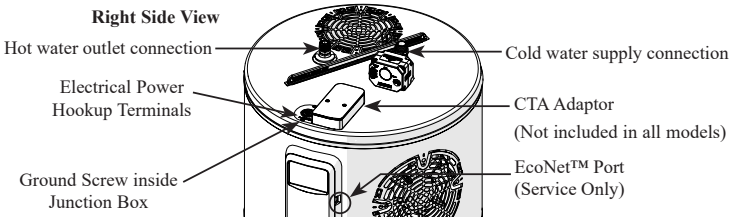

Electrical Connections

⚠WARNING: Turn off electric power at the fuse box or service panel before making any electrical connections.

Also, the ground connection must be completed before making line voltage connections. Failure to do so can result in electrical shock, severe personal injury or death.

Disconnect all power to unit before starting maintenance. Failure to do so can cause electrical shock resulting in severe personal injury or death

The unit must be grounded. Failure to do so can cause electrical shock resulting in severe personal injury or death.

If the water heater has been subjected to fire, flood or physical damage, **DO NOT** operate the water heater again until it has been checked by a qualified service technician.

NOTICE: DO NOT use this appliance if any part has been under water. Immediately call a qualified installer or service agency to replace a flooded water heater. DO NOT attempt to repair the unit! It must be replaced.

Electrical Connections continued...

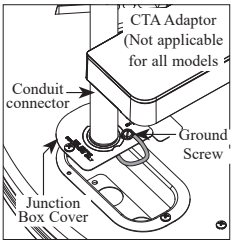

Water heater junction box.

⚠DO NOT turn on the electrical supply or operate this water heater unless it is completely full of water.

⚠CAUTION: The presence of water in the piping and water heater does not provide sufficient conduction for a ground. Non-metallic piping, dielectric unions, flexible connectors etc. can cause the water heater to be electrically isolated.

A separate branch circuit with copper conductors, overcurrent protective device and suitable disconnecting means must be provided by a qualified electrician.

All wiring must conform to local codes or latest edition of National Electrical Code ANSI/NFPA 70.

The water heater is completely wired to the junction box inside jacket at the top front of the water heater. An opening for 1/2 in. or 3/4 in. electrical fitting is provided for field wiring connections.

The voltage requirements and wattage load for the water heater are specified on the rating plate on the front of the water heater.

The branch circuit wiring should include either:

1. Metallic conduit or metallic sheathed cable approved for use as a grounding conductor and installed with fittings approved for the purpose.
2. Non-metallic sheathed cable, metallic conduit or metallic sheathed cable not approved for use as a ground conductor shall include a separate conductor for grounding. It should be attached to the ground terminals of the water heater and the electrical distribution box.

NOTICE: This guide recommends minimum branch circuit sizing and wire size based on National Electric Code. Refer to wiring diagrams in this manual for field wiring connections.

Branch Circuit Sizing And Wire Size Guide

SINGLE PHASE WIRING

Total Water Heater Wattage	Recommended Over Current Protection (Fuse or Circuit Breaker Amperage Rating)	Copper Wire Size AWG based on NE.C. Table 310-16 (75˚C)
	240V	240V
2250	15	14
2750	15	14
3000	20	12
4000	25	10
5000	30	10
5500	30	10

NOTE: When sizing the breaker and wire for over current protection, include an additional 500W to the upper element wattage rating. This will account for the maximum amperage draw of the compressor and fan motor.

Installing the water heater

⚠WARNING: If local codes require external application of insulation blanket kits the manufacturer's instructions included with the kit must be carefully followed.

Insulation Blankets

Insulation blankets, available to the general public, for external use on electric water heaters are not necessary. The purpose of an insulation blanket is to reduce the standby heat loss encountered with storage tank heaters. This water heater meets or exceeds the National Appliance Energy Conservation Act standards with respect to insulation and standby loss requirements making an insulation blanket unnecessary.

The manufacturer's warranty does not cover any damage or defect caused by installation, attachment or use of any type of energy saving or other unapproved devices (other than those authorized by the manufacturer) into, onto or in conjunction with the water heater. The use of unauthorized energy saving devices may shorten the life of the water heater and may endanger life and property.

The manufacturer disclaims any responsibility for such loss or injury resulting from the use of such unauthorized devices.

⚠CAUTION: If local codes require the application of an external insulation blanket to this water heater, pay careful attention to the following so as not to restrict the proper function and operation of the water heater:

- **DO NOT** cover the operating or warning labels attached to the water heater or attempt to relocate them on the exterior of insulation blanket.
- **DO NOT** cover air openings on both sides of the water heater .
- **DO NOT** cover the Controller Assembly, temperature and pressure relief valve or drain valve.
- Inspect the insulation blanket frequently.

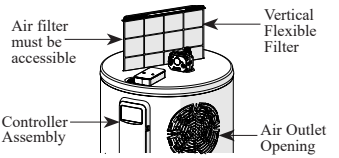

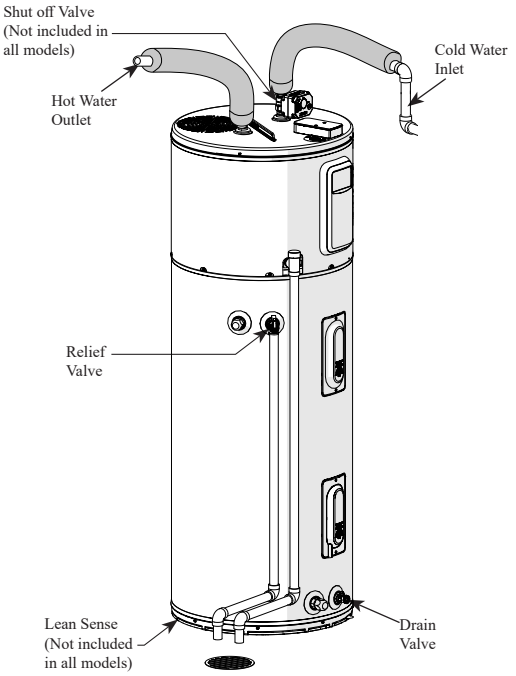

Hot and Cold Pipe Insulation Installation

Install the insulation on the cold water supply inlet and the hot water outlet as shown in the illustration.

Installing the water heater

Ducting Requirements

Always check with local building and HVAC codes before designing the duct system

The water heater may be ducted to the outdoors or another space as described in these instructions. Ducting configurations that does not comply with these guidelines are not supported.

DO NOT connect this water heater to existing duct work; it must be ducted separately from other appliances.

Ducting approved for HVAC applications is required.

Ducting must be adequately supported along both vertical and horizontal lengths.

UL Certified terminations must be used for ducting to the outside. These terminations have been evaluated to ensure there is sufficient protection from rain water entry and resistance to air flow is minimized.

Indoor registers approved for HVAC applications is required.

Rigid ducting must be isolated from floor joists or other structural members to minimize the transmission of noise and vibration. A short section (12 inch minimum) of flexible duct must be used between the water heater and rigid ducting as an isolation method.

Ducting must be insulated per HVAC codes (to prevent condensation).

Ensure cold air exhaust is sufficiently away from structures to prevent condensation on surfaces.

Maximum heater performance is obtained by lowering the resistance to air flow (regular filter maintenance is beneficial) and providing the unit with warm moist air.

Add duct tape if air leaks are detected.

Considerations when planning the duct system:

- Run the ducting the most direct route possible.
- Limit the number of elbows/bends.
- Use the largest duct size possible.
- Use the largest termination possible.
- Consider placement and direction of terminations (reduce recirculation of exhaust into the intake).

Calculated length of duct is the length on the inlet plus the length on the outlet. Any combination of duct lengths on the inlet and outlet is supported up to the maximum duct length (Table 1).

Duct System Configuration

The inlet ducting connections on the water heater accept 8 inch diameter ducting, while the outlet ones accept 10 inch diameter ducting. No additional adaptors are needed.

7 inch, 6 inch, 5 inch diameter ducting is supported. Table 1 lists the total feet of ducting allowed. For duct diameters smaller than 8 inch diameter, Table 1 takes into account the duct reducer(s) and up to 10 feet of 8 inch rigid ducting (two elbows) before the duct reducer(s) at the unit.Duct Reducers must be installed within 10 feet (two elbows) of the unit or within 2 feet of the end of the duct.

Table 1.- Maximum Duct Length.

Duct Type / Diameter	10"	8"	7"	6"	5"
Rigid	340'	340'	160'	65'	17'
Flexible	125'	125'	65'	25'	--

NOTE: Maximum equivalent duct length recommended for unit operation is 125 feet.

Installing the water heater

Equivalent feet for Duct Accessories

Elbows/Bends

Rigid duct elbows and flex bends greater than 45° is considered an elbow.

Flexible ducting bends' inner radius cannot be less than its diameter. If bends with tighter radiuses are needed, a rigid elbow must be used.

Maximum number of elbows/bends allowed are shown in [brackets] in Table 2.

Terminations/Registers

Table 2 equivalent feet for terminations includes the rodent screen.

For terminations and registers with smaller diameters than the duct diameter, Table 2 accounts for the duct reducer and termination/register. Smaller diameter terminations and registers with more than a 2 ft. connection is not supported.

Damper

If ducting to the outside using an exhaust duct only (no intake duct), an approved Rheem damper should be installed no further than 10 ft. of rigid ducting total (two elbows equivalent) from the unit. This prevents outside air from coming into the living space. If ducting air from the outside to the inlet of the heater, no provision is made to prevent outside air from flowing into the living space.

Table 2.- Equivalent feet for Duct Accessories.

Description	10"	8"	7"	6"	5"
Elbows/Flexible Bends (Each) [Maximum Allowed]	5' [8]	5' [8]	5' [6]	5' [4]	5' [2]
UL Certified Termination for ducting outside (Each)	5'	5'	5'	5'	5'
Reduced diameter UL Certified Termination for ducting outside (Each)	N/A	N/A	10'	15'	20'
Register for ducting inside (Each)	5'	5'	5'	5'	5'
Reduced diameter Register for ducting inside (Each)	N/A	N/A	10'	15'	20'
Rodent Screen (must be greater than 83% open area) (Each)	1'	1'	1'	1'	1'
Rheem approved Duct Damper	25'	25'	20'	10'	5'

Table 2 lists equivalent feet for duct accessories and reduced diameter terminations.

Accessory Kits

Part Number	Description	User For
SP20882	Earthquake Isolation Kit for Hybrid Water Heater.	Installations in Seismic Regions.
SP20883	Vibration Isolation Kit for Hybrid Water Heater.	Installation on Non-Concrete floors.
SP20884	8" Dia. UL Certified Termination kit.	Termination to the outside or to attic with 8" diameter.
SP20885	7" Dia. UL Certified Termination kit.	Termination to the outside or to attic with 7" diameter.
SP20886	6" Dia. UL Certified Termination kit.	Termination to the outside or to attic with 6" diameter.
SP20887	5" Dia. UL Certified Termination kit.	Termination to the outside or to attic with 5" diameter.
SP20888	8" Rheem Approved Damper Kit.	Exhaust only to the outside Ducting Configuration (No inlet Duct).
SP20889	25' Flexible 8" dia. duct kit.	For up to 25' of Ducting.
SP20890	Rigid Elbow Duct Kit.	Installation in tight places where space needs to be minimized.
SP17829	Outlet Duct Adaptor Kit	Use for exhaust cool and dry air to another place inside or outside the house (use where applicable)
AP19134	Leak Sensor	Use for water leak sensor (for select models only)
SP21105	Inlet Duct Adaptor Kit	Use for bring warm air from another place inside or outside the house (use where applicable)
SP21111	Gen V leak sensor and shut off valve kit	Use for preventing leak and automatic water shut off valve (for select models only)

Installing the water heater

NOTICE: These seven questions should be answered to ensure correct duct configuration.

See Ducting Example.

Ducting Example:

1. Exhaust/Inlet or both? Both, Inlet and Outlet
2. Ducting to outside of building or another room? Outside building. With UL Certified terminations at both inlet and outlet
3. Length of duct from/to water heater from/to termination? 10 ft at the inlet and 10 ft at the outlet.
4. Flexible or Rigid ducting? Flexible.
5. Diameter of ducting used? 8 in. Diameter
6. Diameter of wall penetrations? 5 in. Diameter
7. Number of elbows/bends? 1 at the inlet.

I. Does calculated ducting length exceed maximum allowable table?

a. 10 ft. (Outlet duct length)

b. 10 ft. (Inlet/Outlet UL certified termination)

c. 20 ft. (reduced diameter termination outlet)

d. 10 ft. (Inlet duct length)

e. 5 ft. (1 Bend on inlet)

f. 20 ft. (reduced diameter termination inlet)

g. Total = 10+10+20+10+5+20 = 75 ft.

Using flexible 8 in. diameter duct, the maximum duct length allowed is 125 ft.; therefore, because 95 ft. is less than 125 ft., this is an acceptable ducting configuration.

Accessory Kits are available for this installation.

Horizontal Duct Installation

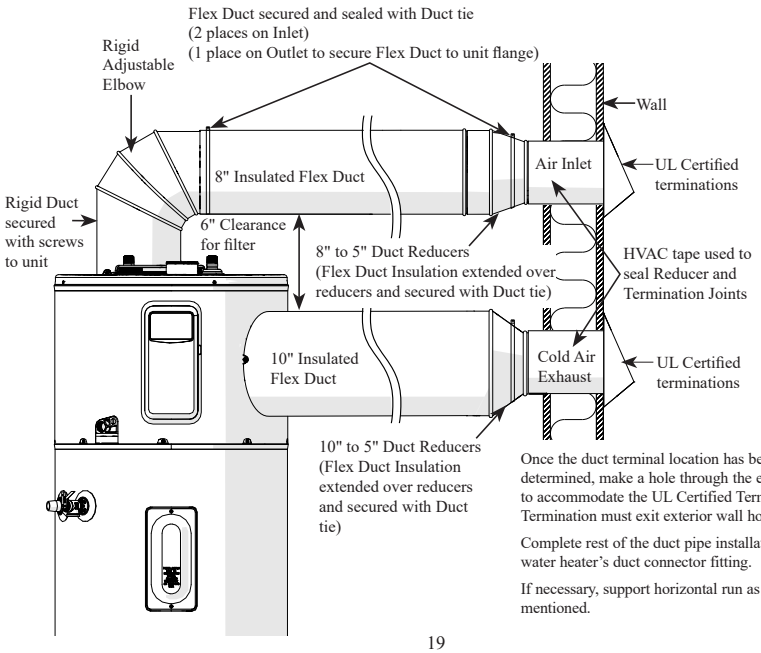

Once the duct terminal location has been determined, make a hole through the exterior wall to accommodate the UL Certified Termination. Termination must exit exterior wall horizontally only.

Complete rest of the duct pipe installation to the water heater's duct connector fitting.

If necessary, support horizontal run as previously mentioned.

Installation Check List

A. Water Heater Location

- ❑ Close to area of heated water demand.
- ❑ Indoors and protected from moisture, wet conditions, freezing temperatures (below 32˚F (0°C)) and High temperatures (above 140°F (60°C)).
- ❑ Area free of flammable vapors.
- ❑ Provisions for Air Circulation (Louvered doors on ducting).
- ❑ Provisions made to protect area from water damage.
- ❑ Sufficient room to service heater.
- ❑ Six inches (6") of clearance from ceiling to top of Hybrid Water Heater to allow for filter maintenance.
- ❑ Access to condensate disposal.
- ❑ Vibration Isolation Kit (Non-Concrete floors).
- ❑ Hybrid seismic Kit (if required).

B. Water Supply

- ❑ Water heater completely filled with water.
- ❑ Air purged from water heater and piping.
- ❑ Water connections tight and free of leaks.
- ❑ Flexible water connections.

C. Relief Valve

- ❑ Temperature and Pressure Relief Valve properly installed and discharge line run to open drain.
- ❑ Discharge line protected from freezing.

D. Wiring

- ❑ Power Supply voltage agrees with water heater rating plate.
- ❑ Branch circuit wire and fusing or circuit breaker of proper size. (Recommended 15 amp & 30 amp breaker for select models).
- ❑ Electrical connections tight and unit properly grounded.
- ❑ 10 gauge wire.

E. Condensate Lines

- ❑ Condensate lines from heat pump installed correctly.
- ❑ Condensate lines from heat pump run to a suitable drain location.

F. Ducting

- ❑ HVAC approved ducting.
- ❑ Calculated length of duct no greater than maximum allowed.
- ❑ UL Certified terminations (For ducting to the outside).
- ❑ Insulated duct.
- ❑ Ducting adequately supported.
- ❑ Ducting adequately isolated from structure.

G. Shutoff Valve

- ❑ Make sure valve is open condition .

H. Leak Sensor

- ❑ Make sure sensor is dry and doesn't touch the water during installation.

Operating the water heater

⚠CAUTION: Hydrogen gas can be produced in a hot water system served by this water heater that has not been used for a long period of time (generally two weeks or more). HYDROGEN GAS IS EXTREMELY FLAMMABLE!! To dissipate such gas and to reduce risk of injury, it is recommended that the hot water faucet be opened for several minutes at the kitchen sink before using any electrical appliance connected to the hot water system. If hydrogen is present, there will be an unusual sound such as air escaping through the pipe as the water begins to flow. DO NOT smoke or use an open flame near the faucet at the time it is open.

Safety Precautions

- **A** Disconnect all power to water heater if it has been subjected to over heating, fire, flood, physical damage.
- **B** **DO NOT** turn on water heater unless it is filled with water.
- **C** **DO NOT** turn on water heater if cold water supply shut-off valve is closed.
- **D** If there is any difficulty in understanding or following the Operating Instructions or the Care and Cleaning section, it is recommended that a qualified person or serviceman perform the work.

Safety Controls

⚠WARNING: If the water heater has been subjected to fire, flood or physical damage, disconnect all power to water heater, and DO NOT operate the water heater again until it has been checked by a qualified service technician.

NOTICE: DO NOT use this appliance if any part has been under water. Immediately call a qualified installer or service agency to replace a flooded water heater. DO NOT attempt to repair the unit! It must be replaced.

The water heater is equipped with a temperature limiting control (ECO) that is located above the upper heating element in contact with the tank surface. If for any reason the water temperature becomes excessively high, the temperature limiting control (ECO) breaks the power circuit to the heating element. Once the control opens, it must be reset manually.

⚠CAUTION: The cause of the high temperature condition must be investigated by qualified service technician and corrective action must be taken before placing the water heater in service again.

To reset the temperature limiting control: (Refer to Illustration in Cavity Insert section):

1. Disconnect all power to unit before starting maintenance.
2. Remove the upper cavity cover and insulation.
3. Press the red RESET button.
4. Replace the insulation, jacket access panel and plastic housing before turning on the power to the water heater.

Water Temperature Setting

⚠DANGER: There is a hot water scald potential if the thermostat is set too high. Households with small children, disabled, or elderly persons may require a 120°F (49°C) or lower thermostat setting to prevent contact with HOT water.

The temperature of the water in the water heater can be regulated by selecting the desired temperature on control display.

Safety and energy conservation are factors to be considered when selecting the water temperature setting of the water heater. The lower the temperature setting, the greater the savings in energy and operating costs.

To comply with safety regulations the temperature is factory set at 120°F (49°C) or less where local codes require. This is the recommended starting point.

Water temperatures above 125°F (52°C) can cause severe burns or death from scalding. Be sure to read and follow the warnings outlined in this manual and on the label on the water heater. This label is located on the front of the water heater.

Mixing valves are recommended for reducing point of use water temperature by mixing hot and cold water in branch water lines. It is recommended that a mixing valve complying with the Standard for Temperature Actuated Mixing Valves for Hot Water Distribution Systems, ASSE 1017 be installed. See page 3 for more details and contact a licensed plumber or the local plumbing authority for further information.

When used in demand response applications a thermostatic mixing valve conforming to ASSE 1017 shall be installed on the hot water supply line following all manufacturer installation instructions. See page 37 for additional installation information.

The chart on the page 3 may be used as a guide in determining the proper water temperature for your home.

Local Startup

User Interface

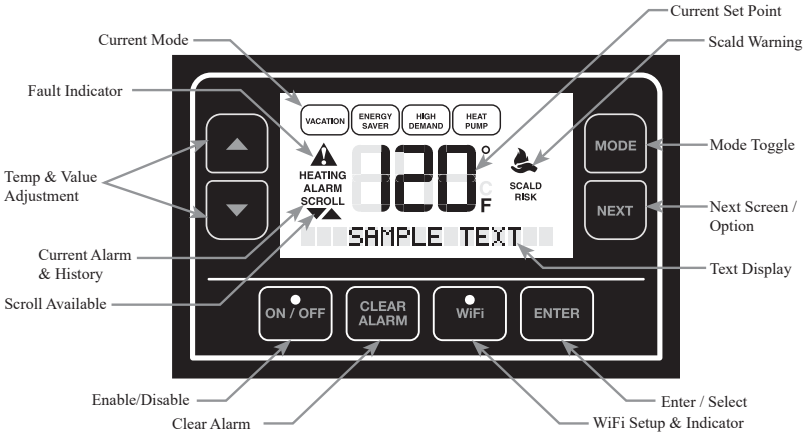

ICONS show the current state of the entire system.

1. **Current Mode** - Illuminated when the system is working on the corresponding mode.
2. **Wi-Fi Indicator -** Illuminated when the display detects valid connection to a Wi-Fi network. Blinking when in provisioning mode.
3. **Fault Indicator -** Illuminated when the display detects OBJECT codes ALMCODE 1, 2, 3 or 4 is greater than "0". This indicates the Control Board has detected either an Alarm or an Alert.
4. **Scroll Available Indicator -** Illuminated when the display detects the Up/Down arrows are enabled to scroll.
5. **Scald Warning -** Illuminated when the display detects potential scalding water temperatures. Use water at own risk.
6. **Enable/Disable Indicator -** Illuminated when the display is Enabled (ON).

Operating Mode (MODE)

Press the "Mode" button to utilize the five major modes of operation: The active mode is displayed on the top of the screen.

(HEAT PUMP) **Heat Pump Only**

This mode will heat with compressor operation only and will not use any electric heat during typical heating and demand cycles, This mode will Minimize power consumption.

(ENERGY SAVER) **Energy Saver - Factory set mode for shipping.**

This mode optimizes compressor and electric heat that results in water heater performance that meets Energy Star requirements.

As result, compressor operation will be maximized and use of electric heat will be minimized.

(HIGH DEMAND) **High Demand**

This mode will maximize the performance of the water heater while still providing good energy savings. Water heater operates with simultaneous compressor and electric heat.

ELECTRIC **Electric Only**

This Mode will heat with the electric resistance elements. This mode should only be used during compressor maintenance periods. This mode will result in maximum power consumption.

(VACATION) **Vacation**

This mode will allow during setting between 2 and 28 days or set indefinitely with the "Hold" setting. Tank temperature will be maintained at about 82°F. Only compressor operation will be allowed as needed.

Local Startup

Enabling / Disabling Unit



1) Press the "ON/OFF" button to turn on / enable unit.
*Unit will be disabled upon initial startup.

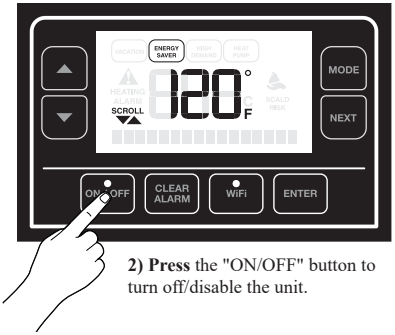

2) Press the "ON/OFF" button to turn off/disable the unit.

Adjusting Temperature



*Scald warning will automatically appear at 120°F (49°C) and higher.

1) Press the "UP" button to increase temperature.



*Scald warning will automatically appear at 120°F (49°C) and higher.

2) Press the "DOWN" button to decrease temperature.

High Temperature Enabling

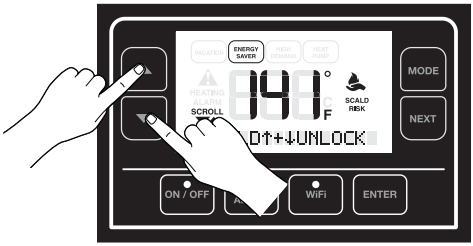

Enable high temperatures (+140°F [62°C]) by pressing and holding both "UP" and "DOWN" buttons for 3 seconds when temperature is set to 140°F (60°C).
*Maximum Temperature: 150°F (65°C). High Temperature Setting will be disabled after 5 minutes if the user decreases the temperature below 140°F (60°C).

Lock/Unlock Display

- Press and hold for 5 seconds both UP and DOWN buttons to Lock/Unlock the Display. This prevents any change in Mode of operation or set-point if any button is pressed.

Local Startup

Change Mode of Operation

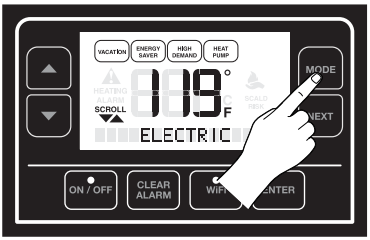

Press the "MODE" button to select operating mode.
The Energy Saver, default mode is recommended for normal operation, providing maximum savings and fast recovery. Heat pump operation in this mode provides primary heating, with one heating element engaging only if required by demand. Recovery and energy savings vary with the different operating modes.

Modes of Operation
- Energy Saver (Default Mode)
- High Demand
- Heat Pump
- Electric
- Vacation

Mode	Efficiency	Recovery
Electric	Very Low	Fast
Heat Pump	High	Very Slow
High Demand	Low.	Very Fast
Energy Saver	Very High.	Fast
Vacation	Very High	None

Setting Menu



Press the "NEXT" button to access the settings.

Keep pressing "NEXT" button to scroll through the following menu items:

1. ALARM BEEP: Enable/Disable Alarm Sound.
   a. Use the Up/Down arrows to change from Yes (Default) to No sound.
2. TEMP DISPLAY: Change the temperature units (°F or °C).
   a. Use the Up/Down arrows to change from F° (Default) to °C.
3. CURRENT ALARMS
   a. Use the Up/Down arrows to scroll through the current alarms.
   b. To clear alarms press the Clear Alarm button.
4. ALARM HISTORY
   a. Use the Up/Down arrows to scroll through the alarm history.
5. CLEAR HISTORY
   a. Press ENTER to clear alarm history.
6. MAC ADDRESS: WiFi MAC Address.
7. NETWORK INSTANCE: Instance of the current unit.
   a. Use the Up/Down arrow to change Network Instance if needed.
8. SOV INSTALLED:
   a. A Shut-Off Valve (SOV) is installed? - This will say yes if a SOV is installed.

Local Startup

WiFi Setup

1. Press, hold for 5 seconds and release the WiFi button.
2. WiFi LED will start to blink when it is ready to start WiFi setup.
3. WiFi signal will start to broadcast for 30 minutes and user can use EcoNet Application to setup WiFi.
4. If setup is not completed in the next 30 minutes, WiFi will stop broadcasting. User should perform these steps again to re-start WiFi setup.
5. Once correctly connected, LED will turn solid blue.



WiFi Soft Reset

If WiFi needs to be reseted while keeping the same WiFi login information:

1. Press, hold for 3 seconds and release the WiFi button. 1 beep will be heard.
2. WiFi will try to re-connect to the same network that was configured previously.

WiFi Hard Reset

If WiFi needs to be reset because there is a new network to be used:

1. Press, hold for 5 seconds and release the WiFi button. 3 beeps will be heard.
2. Follow the same steps as in WiFi Setup section.

EcoNet App

EcoNet App 2.0 Instructions

Download EcoNet app and create profile

1



Open and log into your EcoNet app and select the “Add Product” option on the main equipment screen.

2



Add a location by either selecting “Use my current location” or entering your zip code, then hit “Next”.

3



Place your Water Heater in WiFi setup and click the “Continue” button.

4

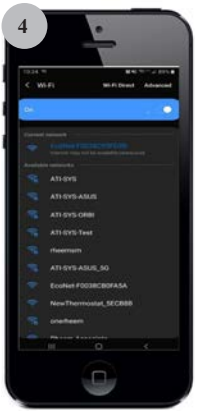

Select your WiFi module’s mac address from the network list. You can find your MAC address in the Water Heater WiFi menu

EcoNet App

5



Return to the app, where you should see the following screen. Click “Available Networks”.

6



Select your router and enter your password. Click “Connect”.

7



The app should proceed to provision your WiFi module using a secure connection. You should see message shown in the image on the left.

8



Once connected, product home screen will be displayed

Care and cleaning of the water heater

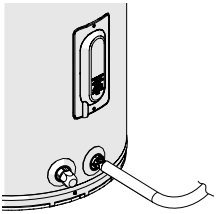

Draining the Water Heater

⚠CAUTION: Shut off power to the water heater before draining water.

⚠DANGER: Before manually operating the relief valve, make certain no one will be exposed to the hot water released by the valve. The water drained from the tank may be hot enough to present a scald hazard and should be directed to a suitable drain to prevent injury or damage.

In order to drain the water heater, turn off the cold water supply. Open a hot water faucet or lift the handle on the relief valve to admit air to the tank.

Attach a garden hose to the drain valve on the water heater and direct the stream of water to a drain. Open the valve.

Routine Preventative Maintenance

⚠DANGER: Before manually operating the relief valve, make certain no one will be exposed to the danger of coming in contact with the hot water released by the valve. The water may be hot enough to create a scald hazard. The water should be released into a suitable drain to prevent injury or property damage.

NOTICE: If the temperature and pressure relief valve on the water heater discharges periodically, this may be due to thermal expansion in a closed water system. Contact the water supplier or your plumbing contractor on how to correct this. DO NOT plug the relief valve outlet.

Properly maintained, your water heater will provide years of dependable trouble-free service.

It is suggested that a routine preventive maintenance program be established and followed by the user.

Most electrical appliances, even when new, make some sound when in operation. If the hissing or singing sound level increases excessively, Contact a qualified installer or plumbing contractor to inspect.

IMPORTANT: See "DANGER on left". At least once a year, lift and release the lever handle on the temperature pressure relief valve, located on the side of the water heater, to make certain the valve operates freely. Allow several gallons to flush through the discharge line to an open drain.

It is recommended to clean the filter on top of the heat pump when "Clean filter reminder" alert appears. Clean by washing with mild detergent and water. Dry and replace. Remove the filter by lifting up, then replace by lowering back into the filter slot on top of the unit. See Figure below.

At least once a year pour a cup of bleach in the access opening of the condensate drain to kill any algae, mold, or mildew that has formed in the pipe. Ensure the condensate can flow freely; unclog if needed.

A water heater's tank can act as a setting basin for solids suspended in the water. It is therefore not uncommon for hard water deposits to accumulate in the bottom of the tank. It is suggested that a few quarts of water be drained from the water heater's tank every month to clean the tank of these deposits.

Rapid closing of faucets or solenoid valves in automatic water using appliances can cause a banging noise heard in a water pipe. Strategically located risers in the water pipe system or water hammer arresting devices can be used to minimize the problem.

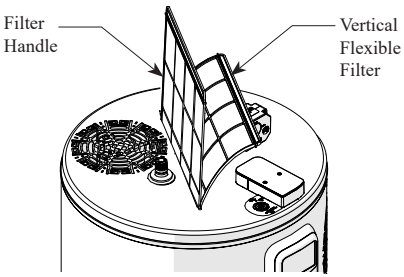

Care and cleaning of the water heater

Vacation and Extended Shut-Down

NOTICE: Refer to the Hydrogen Gas Caution in the Operating Instructions.

If the water heater is to remain idle for an extended period of time, the power and water to the appliance should be turned off to conserve energy and prevent a build-up of dangerous hydrogen gas.

The water heater and piping should be drained if they might be subjected to freezing temperatures.

After a long shut-down period, the water heater's operation and controls should be checked by qualified service personnel. Make certain the water heater is completely filled again before placing it in operation.

Anode Rod

NOTICE: DO NOT remove the anode rod from the water heater's tank. Operation with the anode rod removed will greatly shorten the life of the glass lined tank and will exclude warranty coverage.

This water heater is equipped with an anode rod designed to prolong the life of the glass-lined tank. The anode rod is slowly consumed, thereby eliminating or minimizing corrosion of the glass-lined tank.

Water sometimes contains a high sulfate and/or mineral content and together with cathodic protection process can produce a hydrogen sulfide, or rotten egg odor in the heated water. Chlorination of the water supply should minimize the problem.

Before You Call For Service…



Troubleshooting Tips
Save time and money! Review the chart on this page first and you may not need to call for service.

Problem	Possible Causes	What to Do
Rumbling noise	Water conditions in your home caused a build up of scale or mineral deposits in the water heater.	• Allow a few quarts of water to run from drain valve to remove sediment settlings.
Relief valve producing popping noise or draining	Pressure build up caused by thermal expansion in a closed system	• This is an unacceptable condition and must be corrected. Contact the water supplier or plumbing contractor on how to correct this. **DO NOT** plug the relief valve outlet
Not enough or no hot water	Water usage may have exceeded the capacity of the water heater.	• Wait for the water heater to recover after an abnormal demand
	A fuse is blown or a circuit breaker tripped	• Replace fuse or reset circuit breaker
	Electric supply may be off	• Confirm electric supply to water heater and see installation section of this manual.
	The thermostat may be set too low.	• See the Temperature regulation of the water heater section of this manual
	Leaking or open hot water faucets	• Make sure all faucets are closed
	Electric service to your home may be interrupted	• Contact the local electric utility.
	Improper wiring.	• See the Installing the water heater section of this manual.
	Manual reset limit (ECO)	• See the Temperature regulation of the water heater Refer to page 3 for more information.
	Cold water inlet temperature may be colder during the winter months	• This is normal. The colder inlet water takes longer to heat.
	Not enough air exchange for Efficient Heat Pump Operation.	• If air temperature drops more than 15°F (8°C) during Heat Pump Operation, more air circulation around heater is needed.
Water is too hot	The thermostat is set too high.	• See the Temperature regulation of the water heater section of this manual

⚠**CAUTION: For your safety DO NOT attempt repair of electrical wiring, thermostats, heating elements or other safety devices. Refer repairs to qualified service personnel.**

Troubleshooting Alarm Codes

Troubleshooting Tips
Save time and money! Review the charts on this section first and you may not need to call for service.

The water heater will make an audible beep for notification of Alarms and ⚠ icon. The following steps should be used in determining the Alarm code:

1) Press "Next" button until "Current Alarm" is visible.

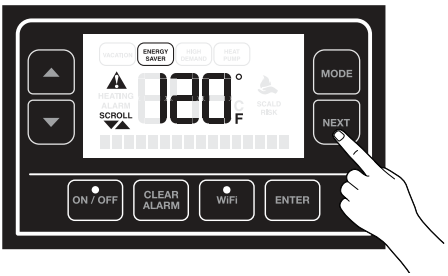

2) Press "Down" arrow button to scroll through the active alarms.



Troubleshooting Alarm Codes

Code	Troubleshooting Guide	Possible Causes	What to Do
A004	Comp.Shutdown: Discharge-Suction Trip	Heating source defaults to elements due to compressor malfunction	1. Confirm fan is operational while compressor is on. (If the fan is not operational, check continuity from middle(ground)terminal to either outside terminal. If there is a 60V or higher reading, the fan should be running and will need to be replaced. If not, replace the control board (rare)). 2. Confirm filter screen is clean. 3. Inspect compressor and surrounding components for any obvious signs of refrigerant leak (oily residue) If the compressor is not operational or there are signs of leakage, the unit will need to be replaced as we do not service sealed system parts.
A005	Compressor Shutdown: Discharge Temp High		
T005	Compressor Shutdown: Discharge Temp High	Heating source defaults to elements due to low airflow	
A006	Suction Temperature Too Low	Heating source defaults to elements due to compressor malfunction	
T006	Suction Temperature Too Low		
A008	Detected Dry Fire Condition	Dry fire protection- Not sufficient water in storage tank: Heater disabled	1. Fill storage tank with water. 2. Purge all air from the storage tank by running a hot water faucet (This is generally an installation issue and indicates there is air in the tank.) If the unit is still displaying the A008, air is still present and should be purged again. Any issues with the board or sensors would exhibit a different alarm code.
T009	Compressor wiring may be faulty	Heating source default to elements due to compressor malfunction	1. Check connections of the wiring and sensors. 2. Get an Ohm reading on the thermistors (if multimeter is available) (See Ohm chart for correct readings based on ambient temperature). 3. Check on display by selecting Service-->Sensors-->If sensor shows - 40°F, the circuit is open. +250°F indicates the circuit has shorted. Note: To confirm reading, power down the unit and unplug the thermistor from the board. Check Ohm reading. (See ohms chart)
A009	Compressor wiring may be faulty		
A101	Suction Temperature Sensor Failure	Heating source defaults to elements due to heat pump temperature sensor malfunction	
A102	Ambient Temperature Sensor Failure		
A103	Lower Heater Temp Sensor Failure	Lower tank temperature sensor malfunction. Heater disabled.	
A104	Upper Heater Temp Sensor Failure		
A105	Evaporator Temp Sensor Failure	Heating source defaults to elements due to heat pump temperature malfunction.	
A106	Discharge Temp Sensor Failure		
A107	Water Detected on Floor: Check For Leaks	Water is detected in the drain pan	1. Check for obvious water leaks (If leak is present, service for unit leakage). 2. If obvious leakage is not present, disconnect rope sensor from the board and if the code is no longer present, dry (a blow dryer is an acceptable method) or replace rope sensor. 3. If error is still present once the rope sensor has been replaced, the board will need to be replaced. 4. Press and hold the "Clear Alarm" button for 5 seconds to override the alarm for 24 hrs.
A108	Condensate Blocked: Unclog Line	Heating source defaults to elements due to condensate drain blockage	1. Remove top cover from tank 2. Visually inspect to ensure condensate line is clear and there is not excessive condensate in condensate pan 3. If water is present, locate blockage and unlock. 4. Ask customer to where the condensate is being routed 5. If pan is dry and no blockage is present, replace condensate sensor.

Troubleshooting Alarm Codes

Code	Troubleshooting Guide	Possible Causes	What to Do
A125	Lower Element Error or Relay Stuck Closed	Heating element or control board failure. Heater disabled.	Disconnect power to unit 2. Check resistance on element per included Ohm Reading Chart 3. If acceptable ohm reading is present, replace board 4. If ohm reading is not as it should be per included chart, replace
A126	Upper Element Error or Relay Stuck Closed		
A127	Element Wire Routing Error	Elements mis-wired or control board failure. Heater disabled.	1. Disconnect power to unit. 2. Check wiring connection to heating element. 3. Ensure both wires are properly connected at element and board. 4. Check ohm reading on heating element if wires are properly connected. 5. Of acceptable ohm reading is present, replace board. If not, replace element.
A128	Lower Element Relay Failure to Close Error	Control board relay failure. Heater disabled.	1. Disconnect power to unit. 2. Check wiring connection. 3. Check ohm reading if wires are properly connected. 4. Of acceptable ohm reading is present, replace board. If not, replace relay.
A129	Upper Element Relay Failure to Close Error		
A130	Unit Off/Air Temp Freezing: Enable Unit	Ambient temperature is below freezing. --FREEZE WARNING	Select mode to enable heater (Turn it on).
T131	Clean Filter Reminder	Air filter routine maintenance reminder	1. Set mode to Electric or OFF. 2. Remove air filter and clean by washing with a mild detergent. 3. Dry air filter and reinstall. 4. Set unit to desired mode.
T132	Water Heater difficulty satisfying demand	Water heater can not satisfy demand	1. Check for open faucets. 2. Check for water leaks. 3. If none present, unit may be improperly sized.
A120*	Shutoff Valve Can't Close Error	Shut-Off Valve malfunction	1. Check connections of the wiring. 2. Unplug and plug back the Shut-Off valve. 3. If alarm persist, call customer service.
A121*	Shutoff Valve Can't Open Error		
A122*	Shutoff Valve Inputs in Error		
A123*	Shut-Off Valve Not Installed		
A200	High Water Temp! [ECO] Call Tech Service	ECO Tripped. Heater Disabled	1. Disconnect power to unit. 2. Check elements from screw to ground. 3. Check resistance to thermistors. 4. If the issue is neither the elements or thermistor, replace board.
T300	Water Leak Sensor Not Installed	Water Leak Sensor Not Installed	1. Check to ensure water leak sensor is installed. 2. Check wiring connections to sensor from board. 3. Check resistance to sensor to determine whether sensor or board should be replaced (See ohm reading chart for correct readings).

*** NOTE: In case the Shutoff Valve will not be installed on the unit, go to mode on the control panel and hit NO under shut off valve.**

Troubleshooting Alarm Codes

Code	Troubleshooting Guide	Possible Causes	What to Do
A502	Time Clock needs to be programmed	Controller malfunction. Heater disabled.	Replace Control Board
A503	Time Clock not advancing time properly		
T504	WiFi Chip Communication Error		
A900	Controller Fault: Call Tech Service		
T901	Controller Fault: Call Tech Service		
A902	Controller Fault: Call Tech Service		
A903	Controller Fault: Call Tech Service		
A904	Controller Fault: Call Tech Service		
A905	Controller Fault: Call Tech Service		
A906	Power Board Temp. Protection Sensor Failure	Controller getting too hot.	

CTA Module Wiring

Water Heater Junction Box

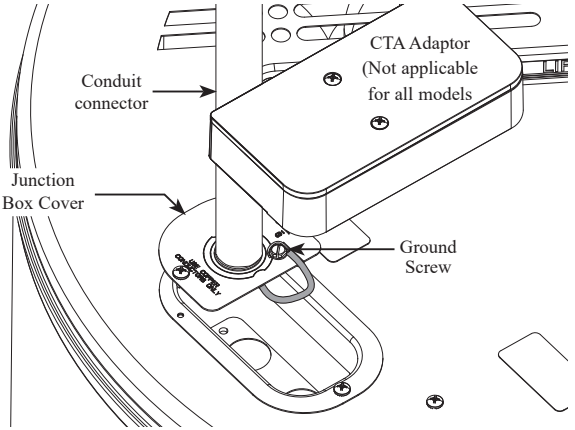

A separate branch circuit with copper conductors, overcurrent protective device and suitable disconnecting means must be provided by a qualified electrician.

All wiring must conform to local codes or latest edition of National Electrical Code ANSI/NFPA 70.

1. Use the ground screw to connect the green wire of the CTA module box to ground.
2. The water heater is completely wired to the junction box inside jacket at the top front of the water heater.

***Note: A CTA2045 compliant Module can be connected to the water heater's top connector. Follow the instructions from the CTA2045 Module supplier to connect.**

JA13 Offline Schedule Setting & Battery Replacement

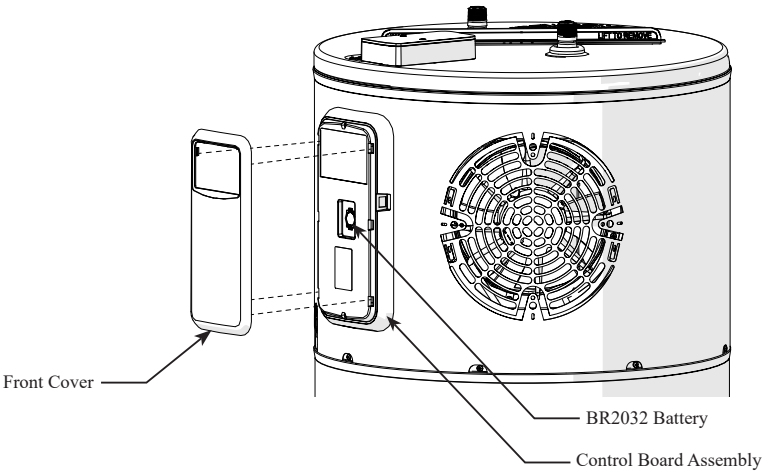

Before uploading and enabling JA13 offline schedule (*Utility Contractor Only*):

1. Power ON Water Heater.
2. Press, hold for 5 seconds and release the WiFi button.
3. WiFi LED will start to blink when it is ready to start WiFi setup.
4. WiFi signal will start to broadcast for 30 minutes and user can use the EcoNet Contractor Portal and Contractor Application to setup JA13 Offline Schedule.
5. If setup is not completed in the next 30 minutes, WiFi will stop broadcasting. User should go to these steps again to re-start WiFi setup.
6. Once setup is completed, the Demand Response Icon will light up which will indicate the Water Heater is following a schedule.

To override JA13 offline schedule:

1. The user can override the JA13 offline schedule for 72 hrs by pressing the MODE button and changing the Mode of operation of the water heater to the user desired Mode and set-point.
2. Once the user override Time elapses, the Demand Response will continue to follow the predetermined schedule.
3. To completely opt-out from JA13 scheduling, contact your utility company.

To replace the battery follow these steps:

1. Remove the front cover of the Control assembly.
2. Remove the BR2032 battery from the battery holder.
3. Replace the battery with an approved BR2032 cell coin battery.
4. Re-Install the front cover of the Control assembly.

Demand Response (CTA-2045/JA13) Installations

A thermostatic mixing valve conforming to ASSE 1017 shall be installed on the hot water supply line following all manufacturer installation instructions.

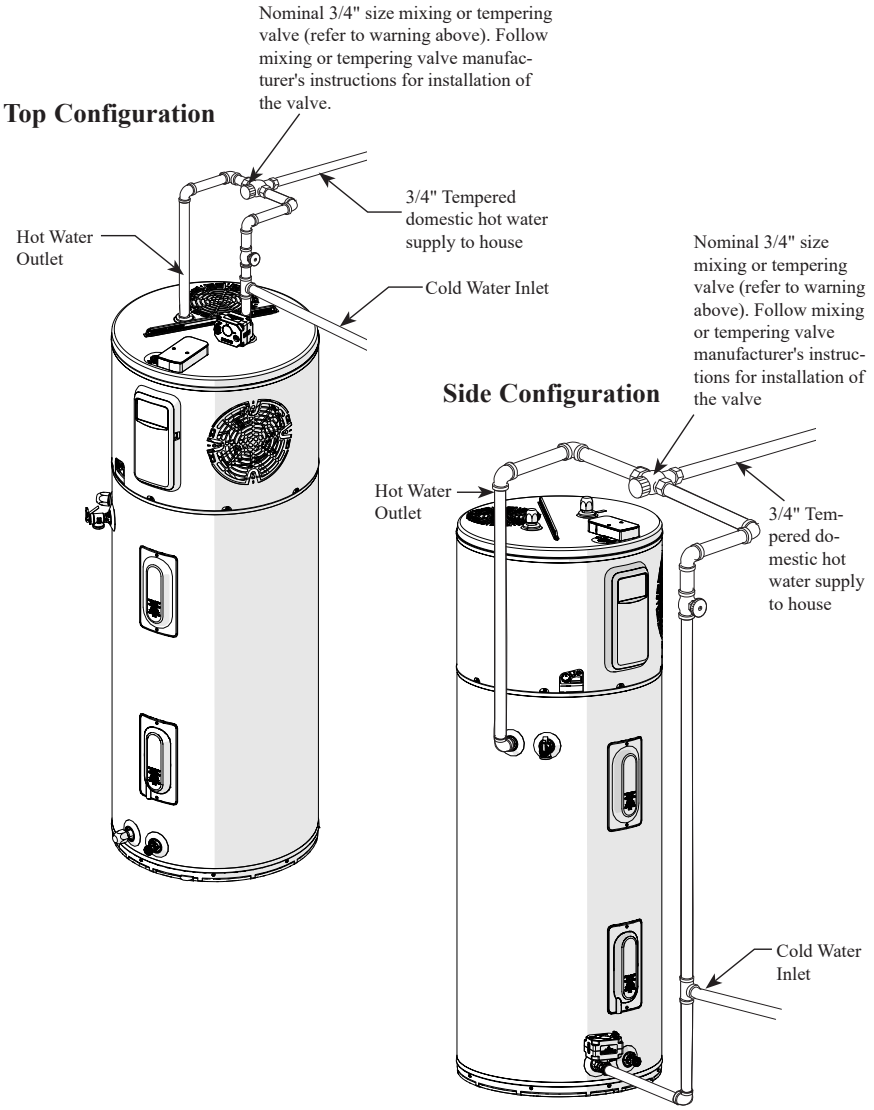

Replacement Parts.

Instructions For Placing a Parts Order

Address parts orders to the distributor or store where the heater was purchased.

All parts orders should include:

1. The model and serial number of the water heater from the rating plate located on the tank jacket.
2. Specify voltage and wattage as marked on the rating plate.
3. Part description (as noted below) and number of parts desired.

***NOTICE: Check the water heater's rating label on the front of the unit for the acceptable element wattage.**

⚠CAUTION: For your safety DO NOT attempt repair of electrical wiring, heating elements, heat pump or electronic controls. Refer repairs to qualified service personnel.

⚠WARNING!
FLAMMABLE CONTENTS UNDER PRESSURE. The compressor is not a serviceable part. The compressor wiring terminals may arc allowing pressurized refrigerant and oil to escape, ignite and cause serious bodily injury, severe burns or death.

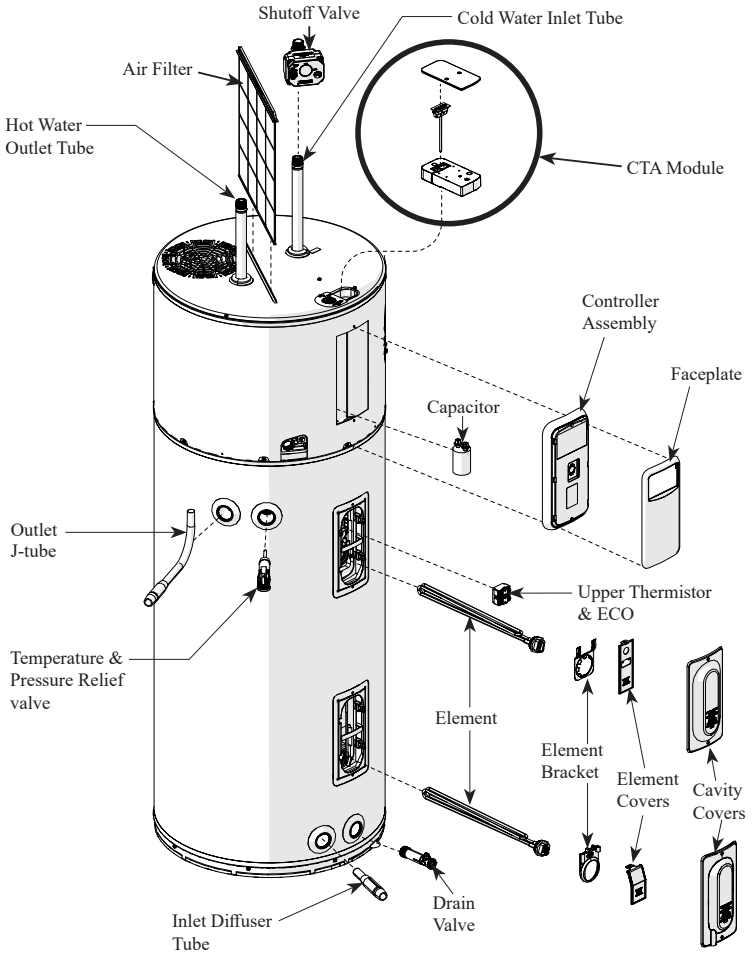

Replacement Parts

Part Number	Description
AP20142	Air Filter
AP11526S-2	Anode
AP11526T-2	
AP11526W-2	
AP20205	Capacitor (15 uf)
AS48043	Cavity Cover
AS38409-1AE	
AS48043-AE	
AP16602	Cavity Cover Foams
AP20947A (50G)	Characterization Plug - HPWH
AP20947B (80G)	
AP20947C (40G)	
AP20947D (65G)	
AS48812	CTA
AP17940-1	Condensate Water Sensor
AP20946	
AP22944	Controller assembly Gen V (without battery)
AP20624 (50/65/80 GAL), AP21830 (40G)	CTA Cover and Box
AP20625 (50/65/80 GAL) AP21829 (40G)	
AS49372- (40G) AS48692	Junction Cover and Box
AS48691	
AP20612	Cover Lower Element
AP21098	Current Sensing Transformer
AP15182-1	Cover-Thermostat HPWH
AP16830D	Drain Valve
AP18708JL	Element 2.25Kw
AP12992L	Heat Trap - Flapper Type
AP23651	Pipe Insulation
AP10869ML-7	Element 4.5KW
AS50548 (40G)/ AS50549 (50/65/80 GAL)	Fan Assembly
AP23717	Fan Spacer

Part Number	Description
AP6708-9	Gasket Element
AP17552-1	Gasket - Upper Cavity Insert Wire
AP21208	Gasket
AP13448A	Insert Flange Gasket
AP6948-3	Gasket Dip Tube
AP23715	Inlet Diffuser Tube
AP23790	Motor
AP23716	Outlet Tube
AP19147C	PFW Sensor Wick
AP19147D	PFW Sensor Wick
AP13920-4	Plug - 3/4 in. NPT
AP18087	Thermistor
AP18944C	Rope Water Sensor - Premium 40/50G
AP18944D	Rope Water Sensor - Premium 65/80G
AP19134	Rope Water Sensor 2 FT (HPWH)
AP14837G	T&P Valve
AP20439	Thermistor Bracket
AP15182-1	Thermostat Bracket
AS50618A AS50618B	Shutoff Valve
AP20590	Wire Harness - Compressor
AP20584	Wiring Harness - Heat Pump Control Board
AP23645	
AS48675	Wiring Harness
AP20509	
AP23507	
AP23506	
AP23496	
AP23595	Grommet
AP23346(40G)/ AP23348 (50,65,80 GAL)	Insulation - Upper Top Pan

Replacement Parts Kits

DIP TUBE - OUTLET	
Part Number	**Description**
AP23438	Dip Tube - Outlet
AP6948	Gasket Dip Tube
AP23751	Installation Instructions

DIP TUBE	
Part Number	**Description**
AP23400A (40 Gal) AP23400B (50 Gal) AP23400C (65 Gal) AP23400D (80 Gal)	Dip Tube
AP6948	Gasket Dip Tube
AP23752	Installation Instructions

DIFFUSER ASSEMBLY	
Part Number	**Description**
AP23715	Diffuser Assembly
AP23761	Installation Instructions

J-TUBE ASSEMBLY	
Part Number	**Description**
AP23716	J-Tube Assembly
AP23763	Installation Instructions

FAN SHROUD	
Part Number	**Description**
AS50548 (40 GAL) / AS50549 (50/65/80 GAL)	Shroud / Fan Assembly
AP23717	Fan Spacer
AP23766	Installation Instructions

SHUT OFF VALVE	
Part Number	**Description**
AS50618A & B	Automatic Shut Off Valve Assembly
AP19134	Rope Water Sensor 2 FT (HPWH)
AP23765	Installation Instructions

FAN MOTOR	
Part Number	**Description**
AP23790	Fan Motor
AP5925KS	Screw - #8 SM Self Drilling - .750
AP21630C	Gasket
AP23768	Installation Instructions

DISPLAY ASSEMBLY	
Part Number	**Description**
AP23649 (Ver. 9) / AP24370 (Ver. 11)	Control Board - W/O Battery
AP5925N	Screws
AP12777-3	J-Type Speed Nut
AP23771	Installation Instructions

CTA BOX	
Part Number	**Description**
AP21829	CTA Box
AP22318	Installation Instructions

THERMISTOR HARNESS ASSEMBLY	
Part Number	**Description**
AP17650	Non-Asphalt Cork Tape
AP17568	Clip (0.375")
AP17489	Clip (0.500")
AP23507, AP23506	Heat Pump Thermisters Wiring Harness
AP24076	Installation Instructions

Cavity Insert Instructions

The following instructions are intended for qualified service personnel ONLY, and should only be done when necessary.

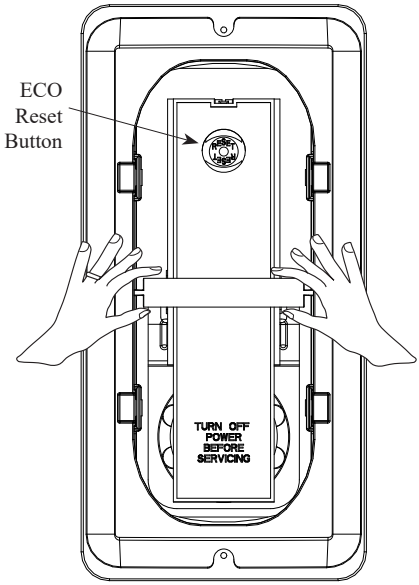

In order to replace the ECO,thermistor or heating element, remove the cavity insert crossbar by following the instructions below:

1. Disconnect all power to unit before to starting maintenance.
2. Remove the jacket access panel(s) and insulation.
3. Rotate the crossbar up and down until it breaks away from the remainder of the cavity insert.
   (See illustration to the left)
4. Discard the crossbar. It cannot and need not be replaced.

   Replace the ECO,thermistor and/or element as necessary.
5. Replace the insulation, jacket access panel(s) and plastic housing before turning on the power to the water heater.

NOTICE: The cavity insert crossbar is necessary for the manufacturing process only. The removal of the crossbar will not interfere with the operation of the water heater.

Wiring Diagram

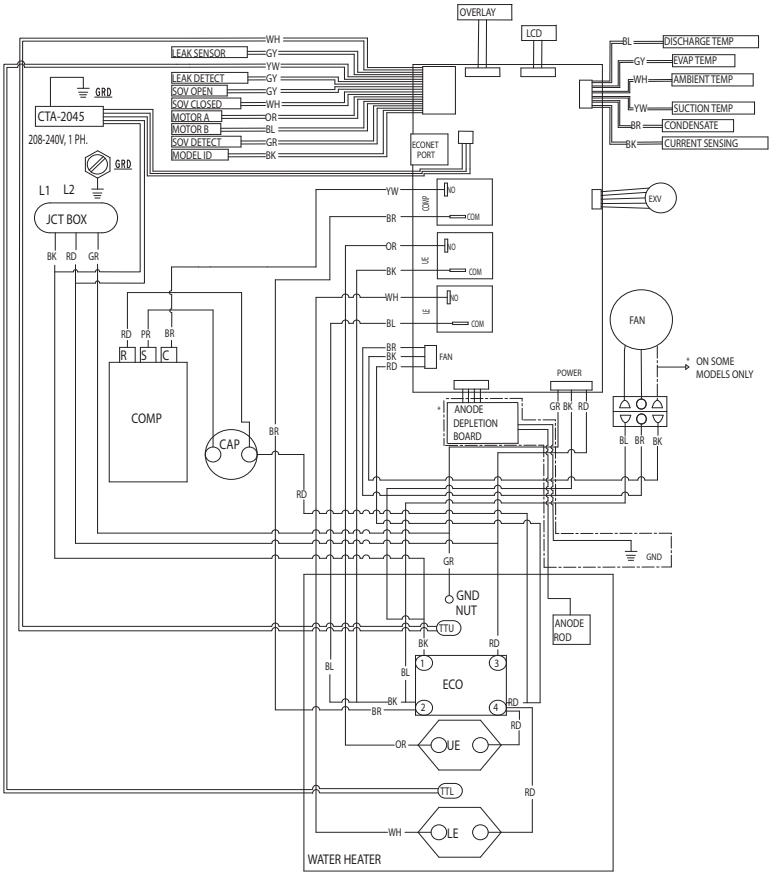

COMPONENT CODE

AT	AMBIENT TEMPERATURE
CAP	CAPACITOR
COMP	COMPRESSOR
COND	CONDENSATE SENSOR
DT	DISCHARGE TEMPERATURE
ECO	EMERGENCY CUT OFF
ET	EVAPORATOR TEMPERATURE
EXV	ELECTRONIC EXPANSION VALVE
FAN	FAN
GND	GROUND NUT ON TANK
NUT	
JCT BOX	JUNCTION BOX
LE	LOWER ELEMENT
LEAK	LEAK SENSOR
PCB	PROGRAMMED CONTROL BOARD
SOV	AUTOMATIC SHUT OFF VALVE
ST	SUCTION TEMPERATURE
TB	TERMINAL BLOCK
TTL	TANK TEMPERATURE - LOWER
TTU	TANK TEMPERATURE - UPPER
UE	UPPER ELEMENT
CS	CURRENT SENSING

WIRING INFORMATION

LINE VOLTAGE
-FACTORY STANDARD
-FACTORY OPTION
-FIELD INSTALLED

LOW VOLTAGE
-FACTORY STANDARD
-FACTORY OPTION
-FIELD INSTALLED

REPLACEMENT WIRE
-MUST BE THE SAME SIZE AND TYPE OF

WARNING
-CABINET MUST BE PERMANENTLY GROUNDED AND CONFORM TO I.E.C., N.E.C., C.E.C., AND LOCAL CODES AS APPLICABLE.

WIRE COLOR CODE

BK	BLACK
BR	BROWN
BL	BLUE
GR	GREEN
GY	GRAY
OR	ORANGE
PK	PINK
PR	PURPLE
RD	RED
WH	WHITE
YW	YELLOW

Notes

IF YOU NEED SERVICE



1. Should you have any questions about your new water heater, or if it requires adjustment, repair, or routine maintenance, it is suggested that you first contact your installer, plumbing contractor or previously agreed upon service agency. In the event the firm has moved, or is unavailable, refer to the telephone directory, commercial listings or local utility for qualified service assistance.

2. Should your problem not be solved to your complete satisfaction, you should then contact the Manufacturer's National Service Department at the following address:

   800 Interstate Park Drive
   Montgomery, Alabama 36109
   Phone: 1-800-432-8373.

   When contacting the manufacturer, the following information will be requested:

a. Model and serial number of the water heater as shown on the rating label located on front of the water heater.
b. Address where the water heater is located and physical location.
c. Name and address of installer and any service agency who performed service on the water heater.
d. Date of original installation and dates any service work was performed.
e. Details of the problems as you can best describe them.
f. List of people, with dates, who have been contacted regarding your problem.

3. Should you have any issue or need assistance with the WiFi Module/EcoNet App then contact the EcoNet Customer Service:

   Phone: 1-800-255-2388
   Website: www.Rheem.com/EcoNet