Parrot Uncle

F3012

CEILING FAN INSTALLATION MANUAL

READ AND SAVE THESE INSTRUCTIONS

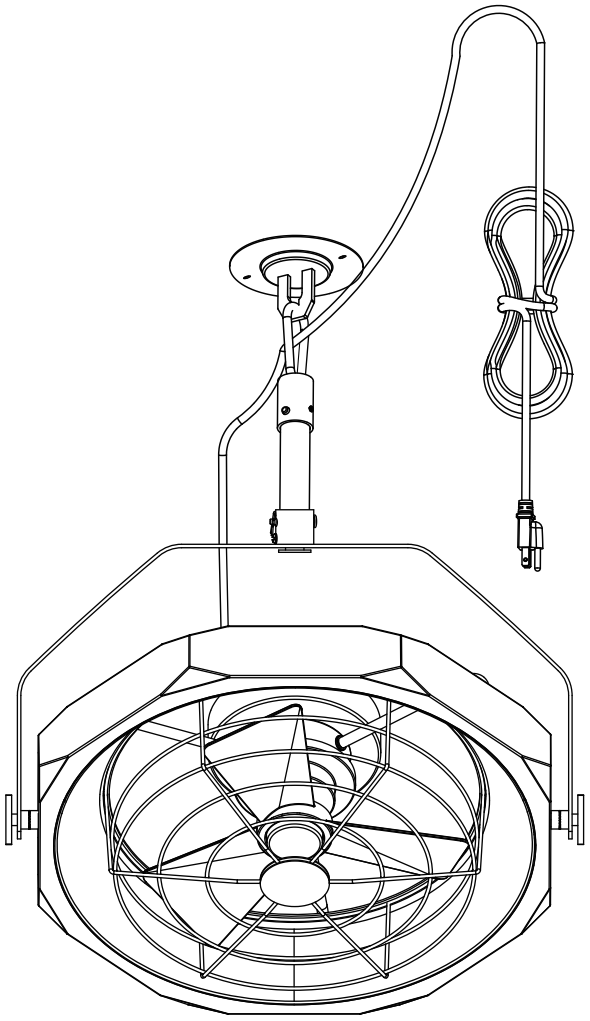

English

Parrot Uncle

F3012

Installation & Operating Instructions for the
Parrotuncle Owner's Installation, Manual

WARNING: SHUT POWER OFF AT FUSE OR CIRCUIT BERAKER

Safety Information

1. To reduce the risk of electric shock, the electricity has been turned off at the circuit breaker or fuse box before begin.
2. All wiring must be in accordance with the National Electrical Code NASI/NFPA 70-1999 and local electrical codes. Electrical installation should be performed by a qualified licensed electriccian.
3. The outlet box and support structure must be securely mounted and capable of reliably supporting 35lbs(15.9kg). Use only UL listed outlet boxes marked “Acceptable for Fan Support of 35lbs (15.9kg) or less.”
4. The fan must be mounted with a minimum of 7 ft. (2.1m) clearance from the trailing edge of the blades to the floor.
5. Do not operate the reversing switch while the fan blades are in motion. You must turn the fan off and stop the blades before you reverse the blade direction.
6. Do not place objects in the path of the blades.
7. To avoid personal injury or damage to the fan and other items, please be careful when working around or cleaning the fan.
8. Electrical diagrams are for reference only. Light kits that are not packed with the fan must be UL-listed and marked suitable for use with the model fan you are installing. Switches must be UL General Use Switches. Refer to the instructions packaged with the light kits and switches for proper assembly.
9. After making electrical connections, spliced conductors should be turned upward and pushed carefully up into the outlet box. The wires should be spread apart with the grounded conductor and the equipment-grounding conductor on one side of the outlet box.
10. All set screws must be checked and retightened where necessary before installation.



WARNING: To reduce the risk of personal injury, do not bend the blade brackets (also referred to as flanges) during assembly or after installation. Do not insert objects in the path of the blades.



WARNING: Remove the rubber motor stops on the bottom of the fan before installing the blades or testing the motor.



WARNING: To reduce the risk or fire or electric shock, do not use this fan with any solid-state speed control device.



WARNING: To avoid possible electric shock, turn the electricity off at the main fuse box before wiring. If you feel you do not have enough electrical wiring knowledge or experience, contact a licensed electrician.



WARNING: Electrical diagrams are for reference only. Optional use of any light kit shall be UL-listed and marked suitable for use with this fan.



WARNING: To reduce the risk or fire, electric shock, or personal injury, mount to outlet box marked” Acceptable for fan support of 35 lbs.(15.9 kg) or less“ and use the screws provided with the outlet box.

TECHNICAL INFORMATION

SKU#	Rated Voltage	Rated Power (motor)	Light
F3012	110-120VAC	10W, Max. 0.09A	1*LED Module Max. 24W

Parrot Uncle

F3012

Installation & Operating Instructions for the
Parrotuncle Owner's Installation, Manual

WARNING: SHUT POWER OFF AT FUSE OR CIRCUIT BERAKER



Wood screws (4PCS)

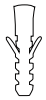

Expansion screws (4PCS)



Plastic wire nuts (3PCS)



Mounting screws (2PCS)



Washers (2PCS)



Spring washers (2PCS)



Ceiling Bracket (1PC)

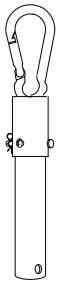

Downrod Assembly (1pc)

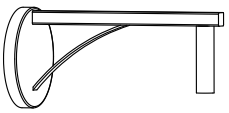

Wall Bracket (1PC)



Remote control (1PC)

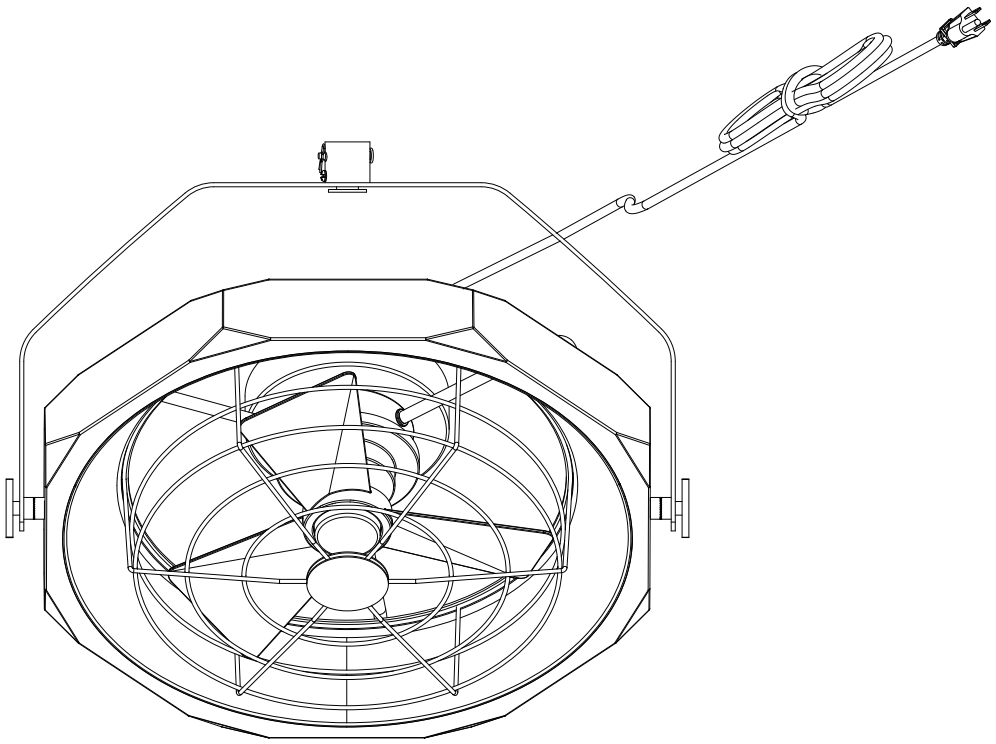

Light fixture (1PC)

Pls check whether above accessories are completed or not? Yes, and install.

Parrot Uncle

F3012

Installation & Operating Instructions for the
Parrotuncle Owner's Installation, Manual

WARNING: SHUT POWER OFF AT FUSE OR CIRCUIT BERAKER

THREE INSTALLATION METHODS

A. HOOK INSTALLATION
B. WALL INSTALLATION
C. CEILING INSTALLATION(When the power cord cannot be used)

A.1 Installing Ceiling Bracket

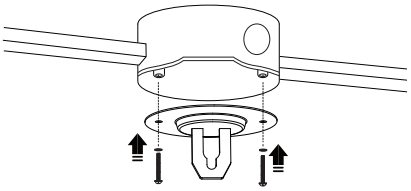

Option 1: Concrete ceiling

Use 2 mounting screws and washers provided when:
Securing to outlet box. Make sure it is securely installed and is acceptable for fan support of 15.9kg (35 lbs) or less.

Option 2: Wood ceiling

Use 2 wood screws when:
Securing to support structure. Drill 2 holes in support structure to aid in securing ceiling bracket.

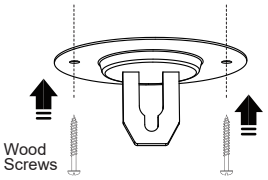

A.2 Installing Downrod

Remove the pre-installed pin, clip and 2 setscrews from the light fixture.
Insert the downrod assembly into the hanging head of the hanging bracket, carefully re-install the pin and clip, tighten the setscrews with a screwdriver.

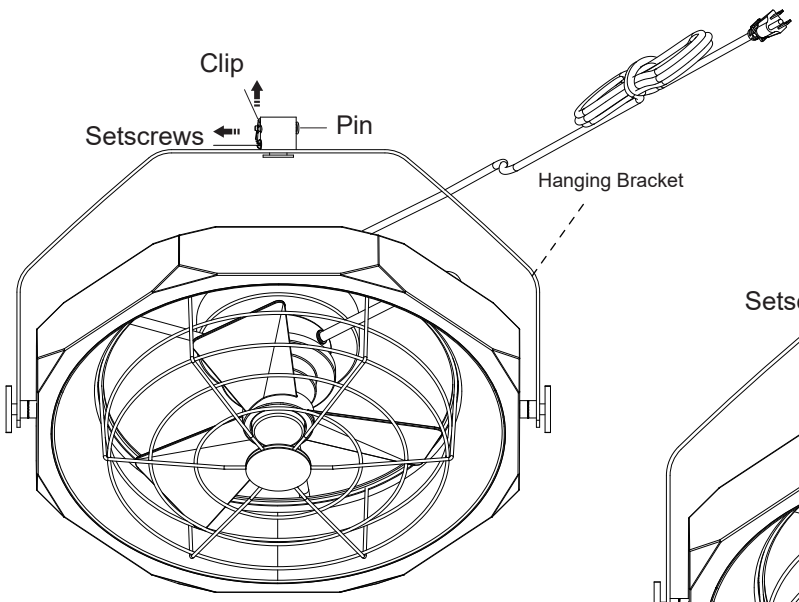

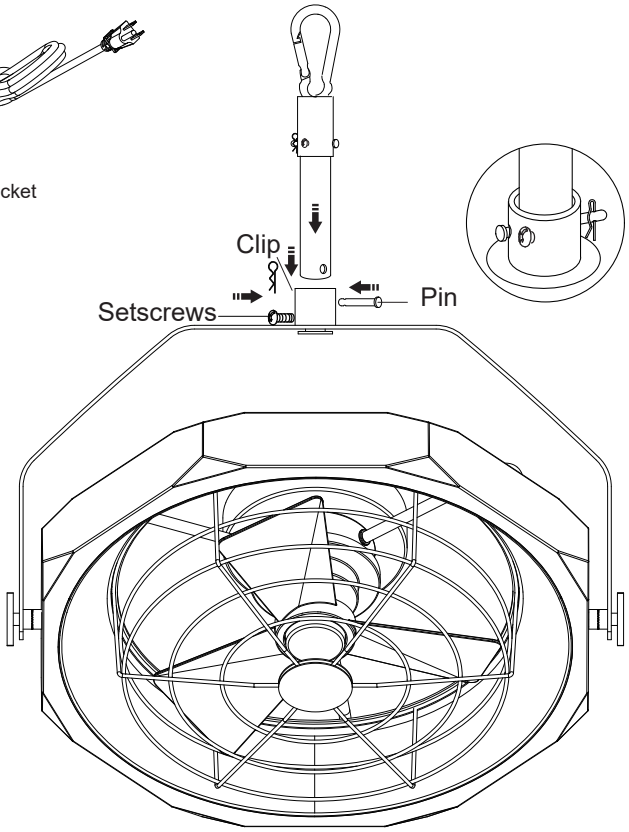

Parrot Uncle

F3012

Installation & Operating Instructions for the
Parrotuncle Owner's Installation, Manual

WARNING: SHUT POWER OFF AT FUSE OR CIRCUIT BERAKER

A.3 Hanging light fixture

Feed the power cord through inside the carabiner, hang the carabiner into the ceiling bracket.
Adjust the fan light to the desired position and tighten the knobs on both sides to secure it.

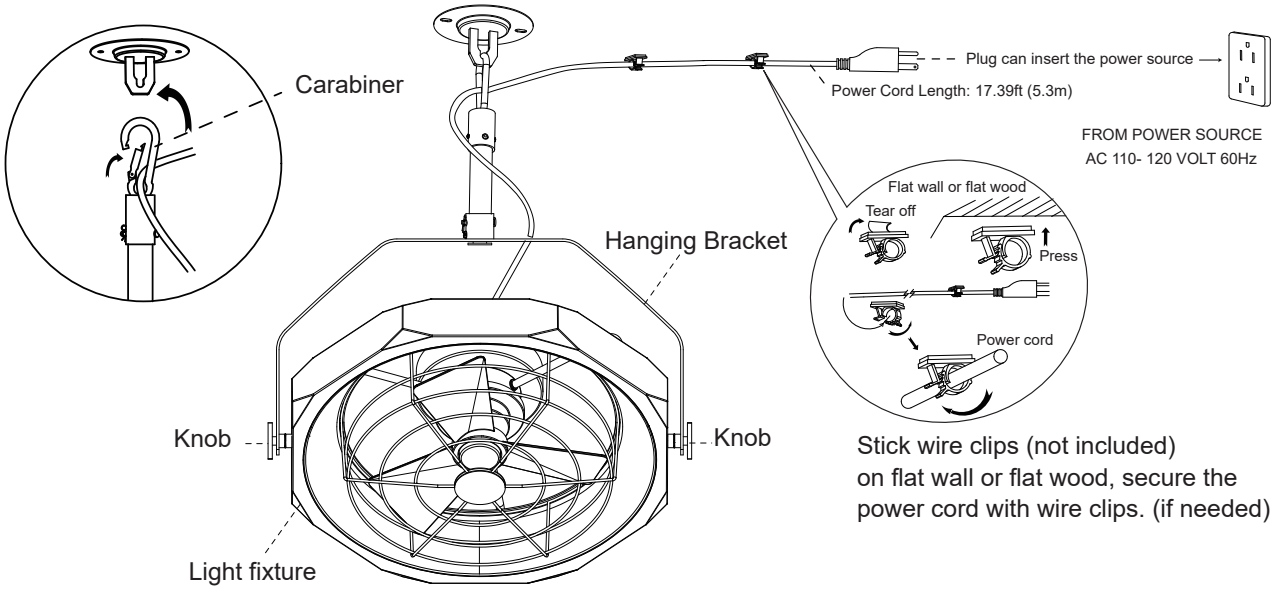

Stick wire clips (not included)
on flat wall or flat wood, secure the
power cord with wire clips. (if needed)

B.1 Installing Wall Bracket:

Ensure that the wall bracket pipe mouth is vertically downward!

Remove 4 screws from the wall bracket A. Pull out the wall bracket A from the wall bracket B.

Option 1: Concrete wall

Use 2 mounting screws and washers provided securing the wall bracket A to outlet box(if have). Make sure it is securely installed and is acceptable for fan support of 15.9kg (35 lbs) or less.
or Drill 4 holes in wall, insert plastic expansion screws, use 4 wood screws securing the wall bracket A.

Option 2: Wall with wooden support structure

Use 4 wood screws securing the wall bracket A to wall with wood support structuer.

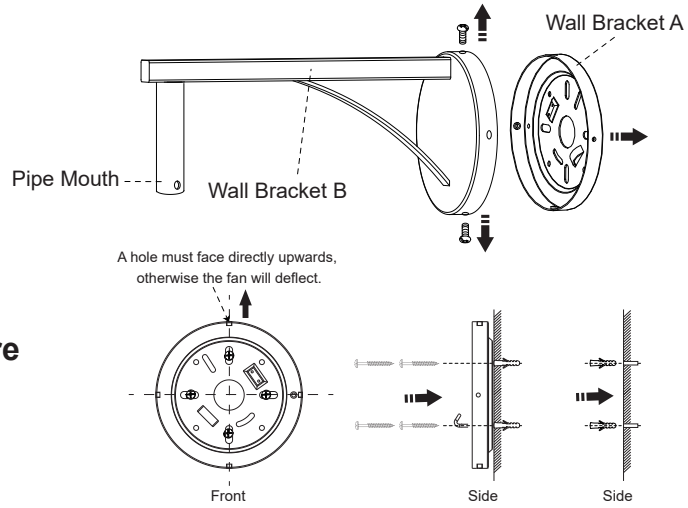

B.2 Installing Wall Bracket B

Using 4 screws previously removed attach the wall bracket B to the wall bracket A.
Tighten the all screws firmly.

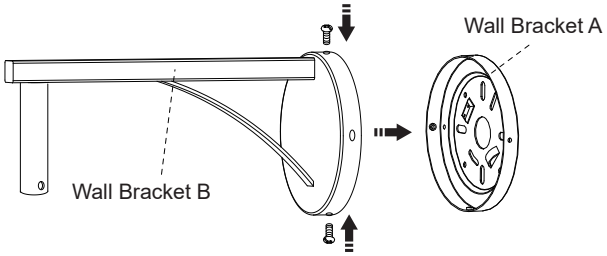

Parrot Uncle

F3012

Installation & Operating Instructions for the
Parrotuncle Owner's Installation, Manual

WARNING: SHUT POWER OFF AT FUSE OR CIRCUIT BERAKER

B.3 Hanging light fixture

Remove the pre-installed pin, clip and 2 setscrews from the light fixture.
Connect the light fixture to the wall bracket, carefully re-install the pin and clip, tighten the setscrews with a screwdriver. Feed the power cord through inside the wall bracket, insert plug to the power source.
Adjust the fan light to the desired position and tighten the knobs on both sides to secure it.

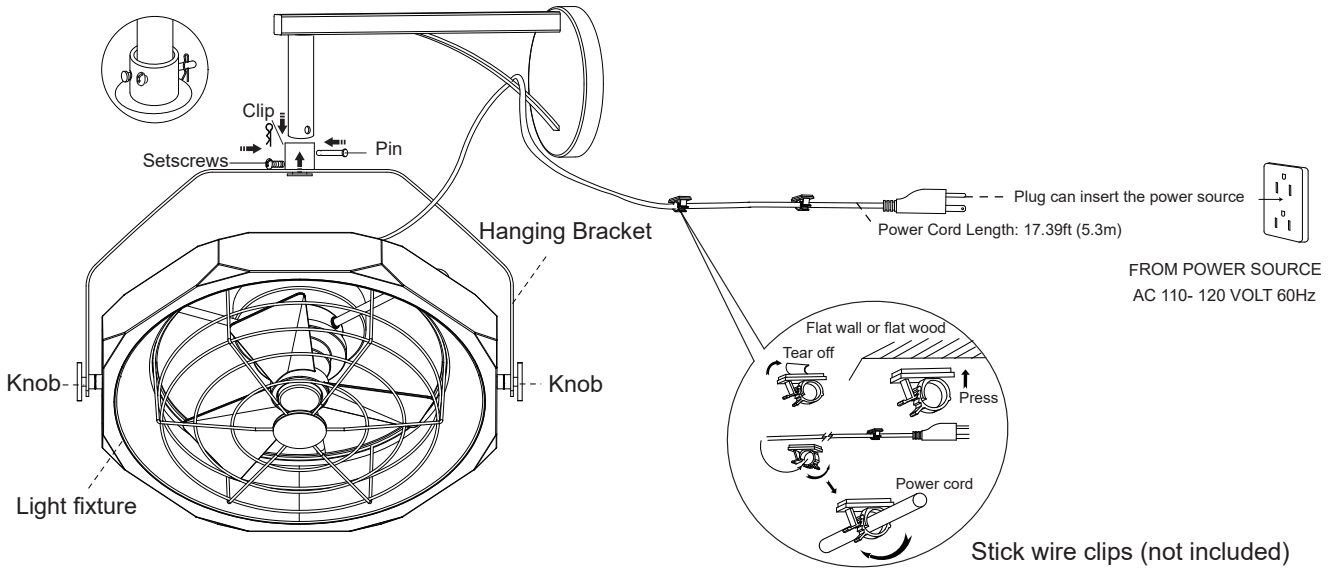

Stick wire clips (not included) on flat wall or flat wood, secure the power cord with wire clips. (if needed)

ADJUST THE POSITION OF THE LIGHT FIXTURE

(1) Loosen the two screws that secure the hanging head and hanging bracket, gently rotate the hanging bracket, adjust the position of the light fixture as needed, and then tighten these two screws again.

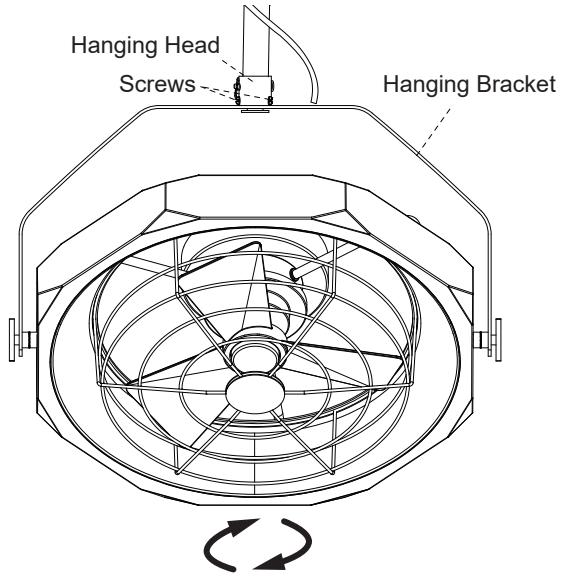

(1)

(2) Loosen the two knobs that secure the hanging head and light fixture, gently rotate the light fixture, adjust the position as needed, and then tighten the two knobs again.

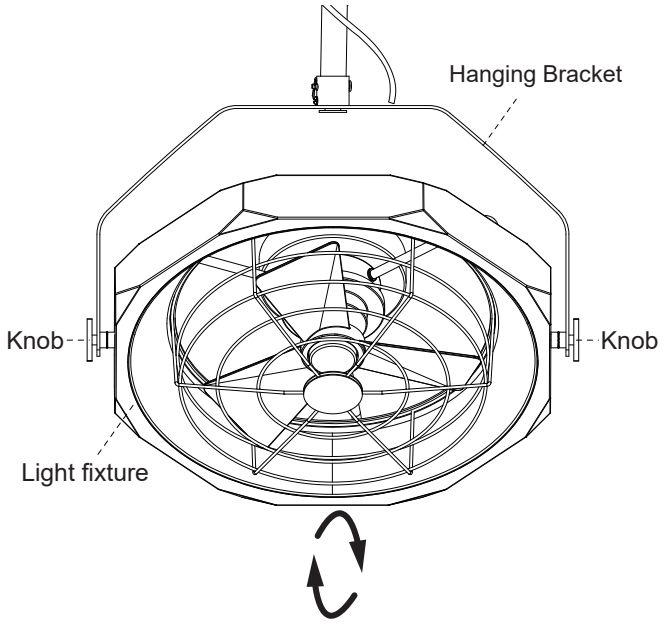

(2)

Parrot Uncle

F3012

Installation & Operating Instructions for the
Parrotuncle Owner's Installation, Manual

WARNING: SHUT POWER OFF AT FUSE OR CIRCUIT BERAKER

C.1 Remove the hanging plate and power cord from the light fixture:

1. Loose 2 knobs of the light fixture, remove the hanging plate from the light fixture.
2. Remove 2 screws and loose the other 2 screws from the hanging plate. Rotate and pull up the hanging plate , and disconnect the power cord (black, white, green wires) from the controller (pre-installation).
3. Loose the nut of the power cord and remove the power cord from the hanging plate.

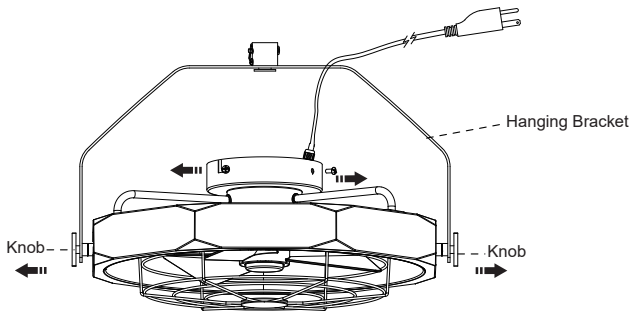

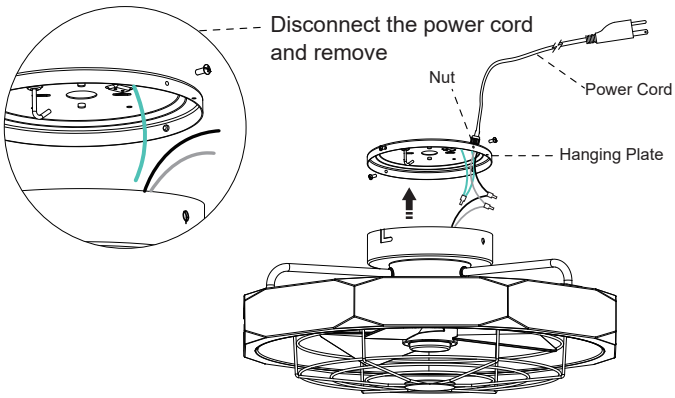

C.2 Installing hanging plate removed

⚠ WARNING:

To avoid possible electrical shock, before installing your ceiling fan, disconnect the power by turning off the circuit breakers to the outlet box associated with the wall switch location.

Option 1: Concrete ceiling

Use 2 mounting screws and washers provided when:
Securing to existing ceiling fan-rated outlet box. Make sure it is securely installed and is acceptable for fan support of 15.9kg (35 lbs) or less.

Option 2: Wood ceiling

Use 4 wood screws when:
Securing to support structure with apporved electrical outlet box.
Drill 4 holes in support structure to aid in securing hanging plate.

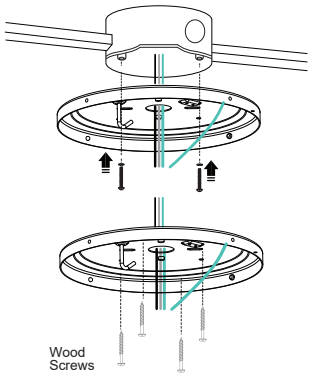

C.3 Installing the light fixture to hanging plate

1.Connect the remote controller to the power supply using plastic wire nuts.
2. Locate 2 screws of the hanging plate, attach light fixture to the hanging plate by placing screws into the slots. Rotate the light fixture counterclockwise so that screws slide into the narrow ends of the slots.
3. Use the 2 screws that were previously removed to lock the light fixture and the hanging plate tightly.
4. Tighten the all screws firmly.

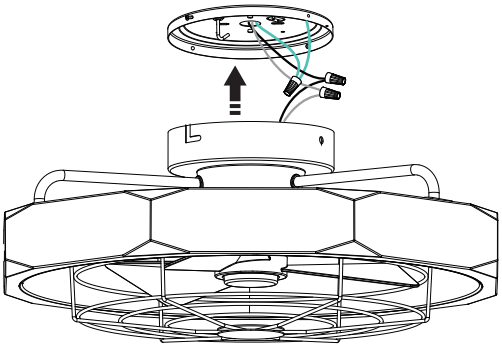

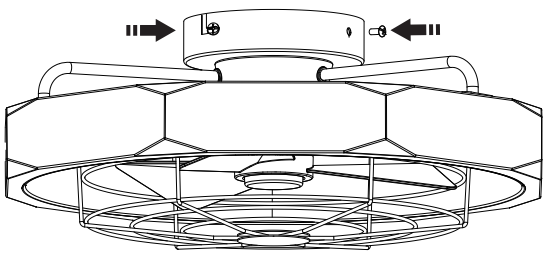

Parrot Uncle

F3012

Installation & Operating Instructions for the
Parrotuncle Owner's Installation, Manual

WARNING: SHUT POWER OFF AT FUSE OR CIRCUIT BERAKER

PRODUCT SIZE

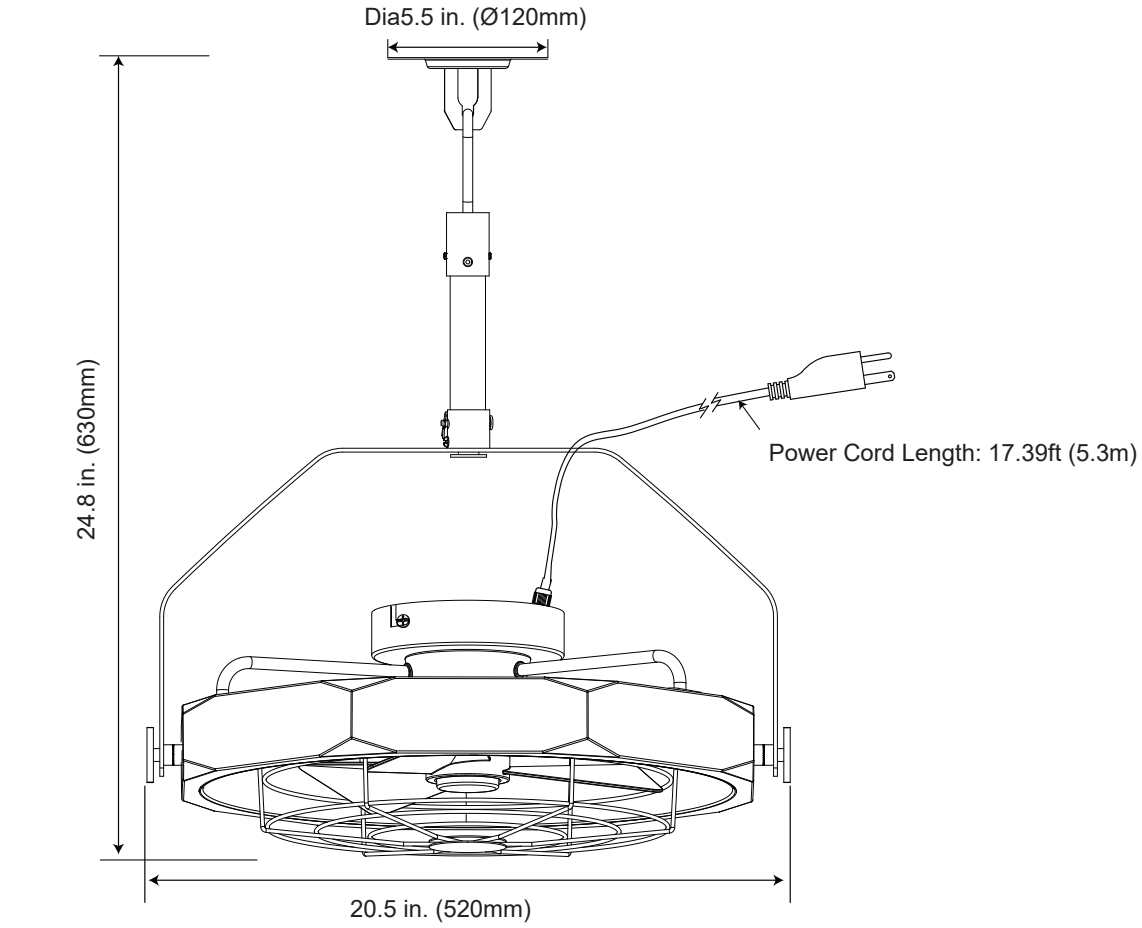

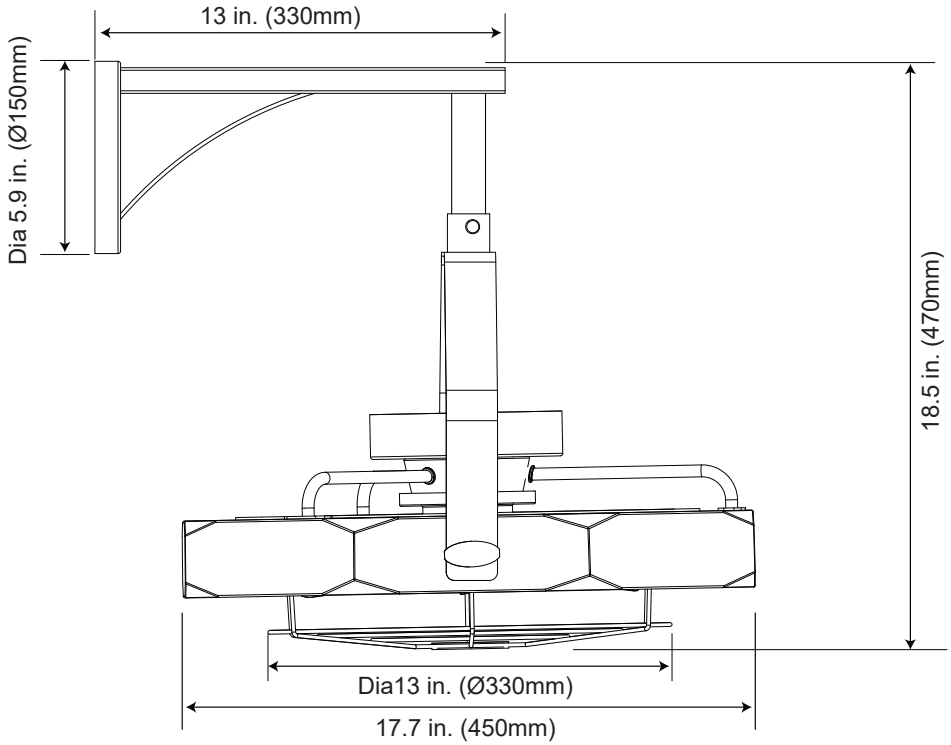

Parrot Uncle

F3012

Installation & Operating Instructions for the
Parrotuncle Owner's Installation, Manual

WARNING: SHUT POWER OFF AT FUSE OR CIRCUIT BERAKER

Control buttons

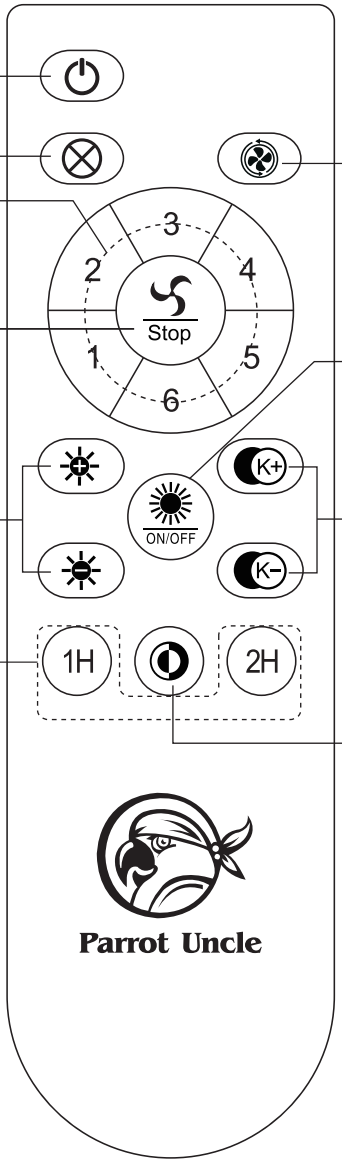

Power Switch
Press to turn
the power ON/OFF

Invalid Key

Fan Speed Setting
(1 to 6)
Press to change
the speed

Fan Stopped

Forward / Reverse

Light switch and Match code
1. Press to turn the light ON/OFF
2. After turn on the light, press and hold within 5 seconds to match code

Brightness Switch
Press ☼ to increase brightness
Press ☼ to decrease brightness

CCT Switch
Press K+ to increase CCT
Press K- to decrease CCT

Quick Timer Settings
(1H,2H)
Press 1H to quickly add a 1-hour Timer to turn off your ceiling fan blades.
Press 2H to quickly add a 2-hour Timer to turn off your ceiling fan blades

Color Temperature Change
Press to quickly change CCT:
warm white / cool white / daylight white

Install 2 AAA 1.5 volt battery (Included).
Note: To prevent damage to remote control, remove the battery if not used for a long time). Store the remote control away from excessive heat or humidity.

Parrot Uncle

F3012

Installation & Operating Instructions for the
Parrotuncle Owner's Installation, Manual

WARNING: SHUT POWER OFF AT FUSE OR CIRCUIT BERAKER

REMOTE CONTROL MATCHING CODE:

Power on the receiver, press the ON/OFF key within 5 seconds of the light on, when you hear a beep or a light flashes, the code match is successful. If you need to match the code a second time, you need to wait 30 senconds before turning on the power and repeat above operation.

- RF wireless digital transmission technology is adopted to realize the one-to-one control providing a rate of coincident code less than 1/50000. Same code number is attached to the back of the emitter and the receiver. It is required to return a pair of the same code number of emitter / receiver to the manufacturer for repair service in case of any damage.
- In a sufficient space, you can use the receiver at any angle, no worry about the direction.

NOTICES

1. When the emitter is unable to remotely control the controller, please check whether the switch batteries are in good contact, whether they are fixed properly and whether they run out of use.
2. When the emitter is unable to remotely control the receiver, please check whether there is other remote control products around the space and check whether the keys are pressed down, because same nature of remote control product may cause interference with each other resulting in poor receiving effect. Taking away such articles will normalize the remote control function. (the infrared remote controller is not included).
3. Please use this product under applicable voltage. Too low voltage will lead to failure of the remote controller to work (Please refer to the product label for the voltage range and related parameters).
4. Please take out the batteries if you will no use this product for a long time.

FCC STATEMENT:

1.This device complies with Part 15 of the FCC Rules. Operation is subject to the following two conditions: (1) This device may not cause harmful interference. (2)This device must accept any interference received, incduding interference that may cause undesired operation.
2. Changes or modifications not expressly approved by the party responsible for compliance could void the user's authority to operate the equipment.
NOTE:This equipment has been tested and found to comply with the limits for a Class B digital, pursuant to Part 15 or the FCC Rules. These limits are designed to provide reasonable protection against harmful interference in a residential installation. This equipment generates, uses and can radiate radio frequency energy and, if not installed and used in accordance with the instructions, may casue harmful interference to radio communications.
However, there is no guarantee that interference will not occur in a particular installation. If the equipment does cause harmful interference to radio or television reception, which can be determined by turning the equipment off and on, the user is encouraged to try to correct the interference by one or more of the following measures:
---Reorient or relocate the receiving antenna.
---Increase the separation between the equipmentand receiver.
---Connect the equipment into an outlet on a circuit different from that to which the receiver is connected.
---Consult the dealer or an experienced radio/TV technician for help.

WARNING
TO REDUCE THE RISK OF SHOCK.THIS FAN MUST BE INSTALLED WITH A WALL CONTROL/SWITCH.

WARNING: SHUT POWER OFF AT FUSE OR CIRCUIT BERAKER

TROUBLESHOOTING GUIDE

Table of Contents

1. Fan / Remote is not working
2. Fan is noisy
3. Light is not working

Please refer to the instruction sheet for detailed directions and descriptions of installation steps and requirements

1. FAN / REMOTE IS NOT WORKING

Ensure the remote is within the 20 feet range of the receiver
To reset the remote control: 1) Turn off power to fan using the wall switch or circuit breaker. 2) Remove batteries from remote. 3) Wait 10 seconds. 4) Replace batteries and turn power on
Check batteries to insure they are good and oriented correctly
Check to make sure the frequency switches (DIP Switches) from the remote to the receiver are set to the same frequency
Check the main and branch circuit fuses or breakers
If using a Variable Speed Wall Switch, ensure it is specifically designed for use with a ceiling fan.
Check the line wire connections to the fan and the switch wire connections in the switch housing per the instructions
If fan still does not work, please contact Customer Service **Support@parrotuncle.com**

2. THE FAN IS NOISY

Make sure all motor housing screws are tightened
Make sure the screws that attach fan blade to motor are tight
Make sure the wire nut connectors are not rattling against each other or the interior wall of the switch housing
Allow 24-hour break in period. Most noises associated with the new fan may disappear during this time
If using a ceiling light kit, make sure the glassware is secured tightly
Make sure there is a short distance/gap from the ceiling to the top of the canopy. The canopy should not touch the ceiling!
Make sure your ceiling box is secure and that the rubber isolator pads are used between the mounting bracket and outlet box

3. LIGHT IS NOT WORKING

Check the line wire connections to the light and the switch wire connections in the switch housing per the instructions
To reset the remote control: 1) Turn off power to fan using the wall switch or circuit breaker. 2) Remove batteries from remote. 3) Wait 10 seconds. 4) Replace batteries and turn power on
If light still does not work, please contact Customer Service **Support@parrotuncle.com**



Parrot Uncle