Whirlpool

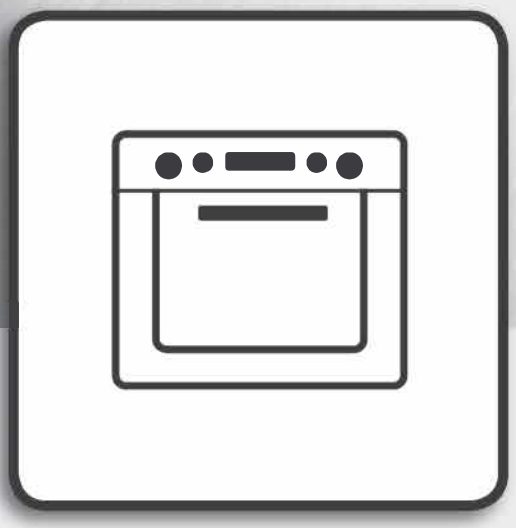

Health & Safety, Use & Care, Installation Guide and Online Warranty Registration Information

Model: WMP9170BLAUS

www.whirlpool.com.au
www.whirlpool.co.nz

BUILT IN OVEN
USE AND CARE GUIDE

Dear user,

Thank you for choosing our products. We are sure you will find your new appliance a pleasure to use. Before you use the appliance, we recommend that you read through these instructions carefully and retain them for future reference. Design and specification may change due to product development, no prior notice will be given.

Table of Contents

IMPORTANT SAFETY INSTRUCTIONS	**3**
INSTALLATIONS	**7**
OPERATING INSTRUCTIONS	**10**
FIRST TIME USE	**12**
FUNCTIONS & DAILY USE	**12**
COOKING TABLE	**16**
CLEANING & MAINTENANCE	**17**
TROUBLESHOOTING	**19**
AFTER-SALES SERVICE	**20**

IMPORTANT SAFETY INSTRUCTIONS

SAFETY INSTRUCTIONS TO BE READ AND OBSERVED

Before using the appliance, read these safety instructions. Keep them nearby for future reference.These instructions and the appliance itself provide important safety warnings, to be observed at all times. The manufacturer declines any liability for failure to observe these safety instructions, for inappropriate use of the appliance or incorrect setting of controls.

⚠To maintain the efficiency and safety of this appliance, only call the authorised service centers and always use original spare parts.

⚠Toddlers (0-3 years) should be kept away from the appliance. Young children (3-8 years) should be kept away from the appliance unless continuously supervised. Children above 8 years old and people with reduced physical, sensory or mental capabilities or lack of experience and knowledge can use this appliance only if they are supervised or have been given instructions on safe use and understand the hazards involved. Children must not play with the appliance. Cleaning and user maintenance must not be carried out by children without supervision.

⚠**WARNING:** The appliance and its accessible parts become hot during use. Care should be taken to avoid touching heating elements. Children less than 8 years of age must be kept away unless continuously supervised.

⚠Never leave the appliance unattended during food drying. If the appliance is suitable for probe usage, only use a temperature probe recommended for this oven.

⚠Keep clothes or other flammable materials away from the appliance, until all the components have cooled down completely. Always be vigilant when cooking foods rich in fat, oil or when adding alcoholic beverages. Use oven gloves to remove pans and accessories. At the end of cooking, open the door with caution, allowing hot air or steam to escape gradually before accessing the cavity so as to prevent burns. Do not obstruct hot air vents at the front of the oven.

⚠Exercise caution when the oven door is in the open or down position, to avoid hitting the door.

⚠When handling the appliance, always use the provided handles recessed into the sides of the oven to prevent harming people or damaging the appliance itself.

⚠Heat will be generated when it is working. Caution must be exercised to avoid touching the heating element.

⚠Use oven gloves to place cookware in the oven or when removing it.

⚠Always grip the oven door handle in the center as the extremities of the same may be hot due to any hot air leaks

⚠Make sure the knobs are in the **0** position when the appliance is not in use.

PERMITTED USE

⚠**CAUTION:** The appliance is not intended to be operated by means of an external switching device, such as a timer, or separate remote controlled system. This appliance is intended to be used in household and similar applications such as: staff kitchen areas in shops, offices and other working environments; farm houses; by clients in hotels, motels, bed & breakfast and other residential environments.

⚠No other use is permitted (e.g. heating rooms). This appliance is not for professional use. Do not use the appliance outdoors.

⚠Do not store explosive or flammable substances (e.g. gasoline or aerosol cans) inside or near the appliance.

INSTALLATION

⚠The appliance must be handled and installed by two or more persons. Use protective gloves to unpack and install.

⚠Installation, including water supply (if any), electrical connections and repairs must be carried out by a qualified technician. Do not repair or replace any part of the appliance unless specifically stated in the user manual. Keep children away from the installation site. After unpacking the appliance, make sure that it has not been damaged during transport. In the event of problems, contact the dealer or your nearest After-sales Service. Once installed, packaging waste (plastic, styrofoam parts etc.) must be stored out of reach of children. The appliance must be disconnected from the power supply before any installation operation. During installation, make sure the appliance does not
damage the power cable preventing catching fire or electric shock. Only activate the appliance when the installation has been completed.

⚠Carry out all cabinet cutting operations before fitting the appliance and remove all wood chips and sawdust. Do not obstruct the minimum gap between the worktop and the upper edge of the oven. Do not remove the oven from its polystyrene foam base until the time of installation.

⚠After installation, the bottom of the appliance must no longer be accessible.

⚠Do not install the appliance behind a decorative door.

ELECTRICAL WARNINGS

⚠The rating plate is on the front edge of the oven (visible when the door is open).

⚠It must be possible to disconnect the appliance from the power supply by unplugging it if the plug is accessible, or by a multi-pole switch installed upstream of the socket in accordance with the wiring rules and the appliance must be earthed in conformity with national electrical safety standards.

⚠Do not use extension leads, multiple sockets or adapters. The electrical components must not be accessible to the user after installation. Do not use the appliance when you are wet or barefoot. Do not operate this appliance if it has a damaged power cable or plug, if it is not working properly, or if it has been damaged or dropped.

⚠If the supply cord is damaged, it must be replaced with an identical one by the manufacturer, its service agent or similarly qualified persons in order to avoid a hazard and electric shock. Incase of replacement of power cable, contact an authorised service centre.

CLEANING AND MAINTENANCE

⚠**WARNING:** Ensure that the appliance is switched off and disconnected from the power supply before performing any maintenance operation; never use steam cleaning equipment - risk of electric shock.

⚠Do not use harsh abrasive cleaners or metal scrapers to clean the door glass since they can scratch the surface, which may result in shattering of the glass.

⚠Ensure the appliance is cooled down before any cleaning or maintenance to prevent burns.

⚠**WARNING:** Switch off the appliance before replacing the lamp.

TECHNICAL SPECIFICATIONS

Model	WMP9170BLAUS
Supply Voltage & Frequency	220-240V/50Hz
Usable Capacity	133L
Total Capacity	150L
Input Power	3000-3600W
Net Weight (kg)	53
Gross Weight (kg)	57.5
Product Dimensions (mm)	894 (W) x 595 (H) x 575 (D)
Cut-out Dimensions (mm)	896-900 (W) x 597-600 (H) x 580-600 (D)

Technical specifications can be changed without prior notice to improve product quality.

The values provided with the appliance or its accompanying documents are laboratory readings in accordance with the respective standards. These values may differ depending on the use and ambient conditions.

INSTALLATIONS

Only a qualified person in compliance with the instructions provided must install the appliance. The manufacturer declines all responsibility for improper installation, which may harm people and animals and damage property.

IMPORTANT: - The power supply to the appliance must be cut off before any adjustments or maintenance work is done on it. Air duct is required for ventilation.

INSTALLATION OF BUILT-IN OVEN

In order to ensure that the built-in appliance functions properly, the cabinet containing it must be appropriate. The figure below gives the dimensions of the cut-out for installation under the counter or in a wall cabinet unit.

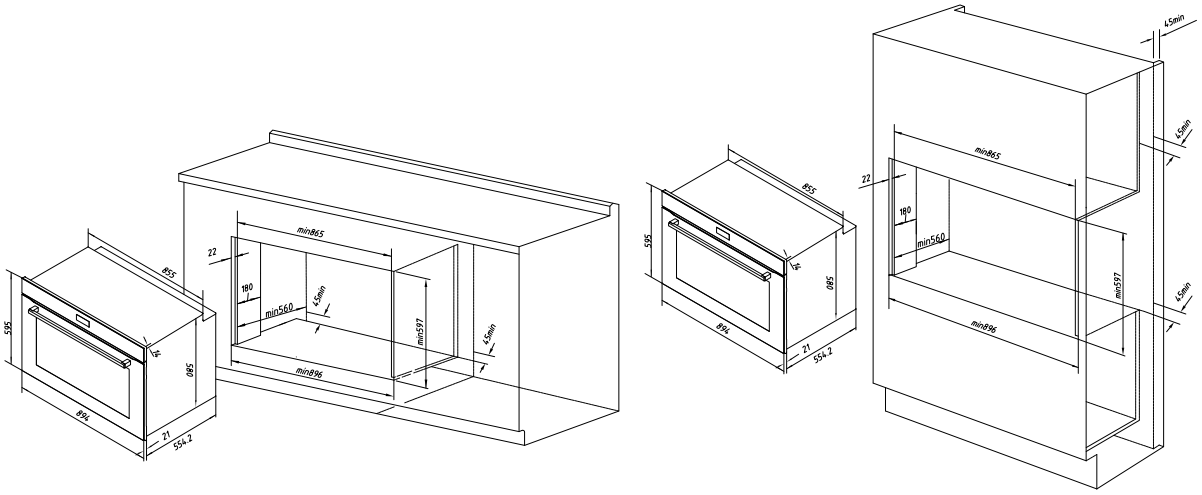

Installation in compliance with the consumption declaration

In order to ensure adequate ventilation ,the back panel of the cabinet unit must be removed. Installing the oven so that it rests on two strips of wood is preferable. If the oven rests on a continuous, flat surface, there must be an aperture of at least 45×560mm.

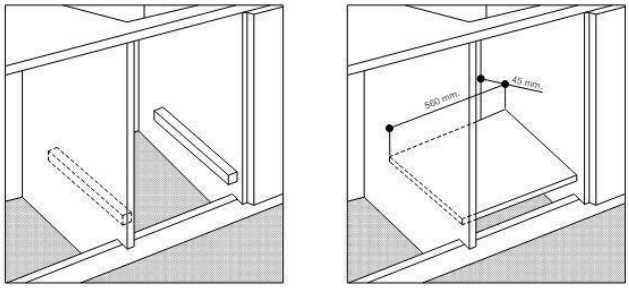

The panels of the adjacent cabinets must be made of heat-resistant material. In particular, cabinets with a veneer exterior must be assembled with glues which can withstand temperatures of up to 100°C.

In compliance with current safety standards, contact with the electrical parts of the oven must not be possible once it has been installed.

All parts, which ensure the safe operation of the appliance, must be removable only with the aid of a tool. To fasten the oven to the cabinet, open the door of the oven and attach it by inserting the 4 wooden screws into the 4 holes located on the perimeter of the frame.

ELECTRICAL CONNECTION

Those ovens equipped with a three-pole power supply cable are designed to operate with an alternating current. The wire for earthling the appliance is yellow-green in color.

CONNECTING THE SUPPLY CABLE TO THE MAINS

Install a standardized plug corresponding to the load indicated on the data plate. When connecting the cable directly to the mains, install an omni polar circuit breaker with a minimum contact opening of 3 mm between the appliance and the mains. The omni polar circuit breaker should be sized according to the load and should comply with current regulations (the earthwire should not be interrupted by the circuit breaker).

The supply cable should be positioned so that it does not reach a temperature of more than 50 ℃ with respect to the room temperature, anywhere along its length, or protected by insulation sleeping having an appropriate rating.

Before making the connection, check that:

- The electrical safety of this appliance can only be guaranteed if the cooker is correctly and efficiently earthed, in compliance with regulations on electrical safety. Always ensure that the earthling is efficient; if you have any doubts call in a qualified technician to check the system. The manufacturer declines all responsibility for damage resulting from a system which has not been earthed.
- Before plugging the appliance into the mains ,check that the specifications indicated on the Rating Label (on the appliance and /or packaging) correspond to those of the electrical mains system of your home.
- Check that the electrical capacity of the system and sockets will support the maximum power of the appliance, as indicated on the data plate .If you have any doubts, call in a qualified technician.
- If the socket and appliance plug are not compatible, have the socket replaced with a suitable model by a qualified technician. The latter, in particular, will also have to ensure that the cross section of the socket cables are suitable for the power absorbed by the appliance. The use of adapters, multiple sockets and /or extensions, is not recommended. If their use cannot be avoided, remember to use only single or multiple adapters and extensions which comply with current safety regulations .In these cases, never exceed maximum current capacity indicated on the single adapter or extension

and the maximum power indicated on the multiple adapter. **The plug and socket must be easily accessible.**

ENVIRONMENTALLY-FRIENDLY DISPOSAL

- The packing box may be fully recycled as confirmed by the recycling symbol. Follow local disposal regulations. Keep potential hazardous packaging (plastic bags, polystyrene, etc.) out of the reach of children.
- This appliance is marked according to the European directive 2012/19/EU on Waste Electrical and Electronic Equipment (WEEE). By ensuring this product is disposed of correctly, you will help prevent potential negative consequences for the environment and human health, which could otherwise be caused by inappropriate waste handling of this product.

- The symbol on the product, or on the documents accompanying the product, indicates that this appliance may not be treated as household waste. Instead, it shall be handed over to the applicable collection point for the recycling of electrical and electronic equipment.
- Disposal must be carried out in accordance with local environmental regulations for waste disposal.
- For more detailed information about treatment, recovery and recycling of this product, please contact your local city office, your household waste disposal service or the shop where you purchase the product.
- Before scrapping, cut off the mains cord so that the appliance cannot be connected to the mains.

OPERATING INSTRUCTIONS

MODEL: WMP9170BLAUS
PRODUCT DESCRIPTION

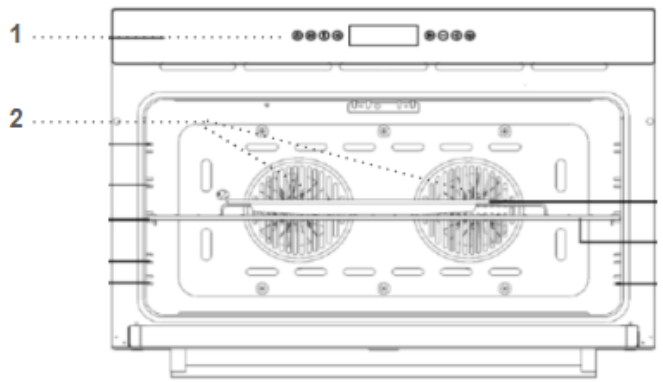

1. Control panel
2. Fan
3. Circular heating element (not visible)
4. Shelf guides
5. Door
6. Upper heating element/grill
7. Lamp
8. Meat probe insert point
9. Identification plate (do not remove)
10. Lower heating element (not visible)

CONTROL PANEL DESCRIPTION

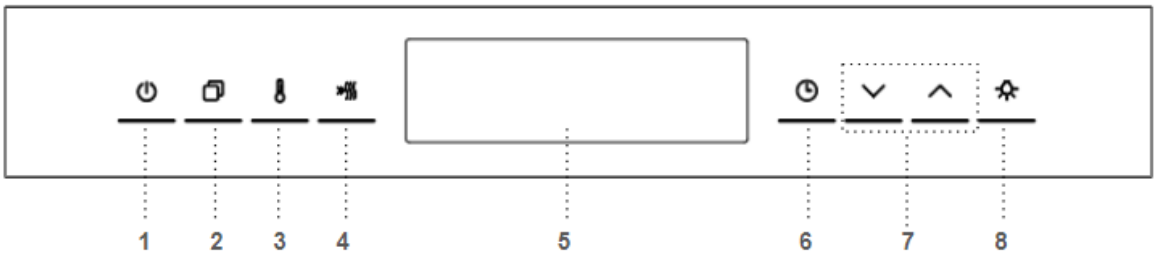

1. **ON/OFF BUTTON**
   For switching the oven on and off for stopping an active function.

2. **FUNCTION BUTTON**
   For access to the functions and menus.

3. **TEMPERATURE BUTTON**
   For accessing the temperature you require when activating functions.

4. **DISPLAY**

5. **TIME BUTTON**
   For accessing the cooking time settings, delayed start and timer.
   For displaying the time when the oven is off.

6. **FAST PREHEAT**
   For preheating the oven quickly.

7. **NAVIGATION BUTTONS**
   For increasing/decreasing the settings or values of a function.

8. **LIGHT BUTTON**

   With the oven switched on, press to turn the oven compartment lamp on or off.

ACCESSORIES

The number and type of accessories may vary depending on which model is purchased. Other accessories that are not supplied can be purchased separately from the After-sales Service.

WIRE SHELF Use to cook food or as a support for pans, cake tins and other ovenproof items of cookware.

AIR FRY BASKET* Use the Air Fry basket for frozen food such as chips, wedges or chicken nuggets.

MEAT PROBE* To measure the core temperature of food during cooking.

BAKING TRAY* Use for cooking all bread and pastry products, but also for roasts, fish en papillote, etc.

TELESCOPIC RAILS- To facilitate inserting or removing accessories.

* Available only on certain models.

INSERTING THE WIRE SHELF AND OTHER ACCESSORIES

Insert the wire shelf horizontally by sliding it across the shelf guides, making sure that the side with the raised edge is facing upwards. Other accessories, such as the drip tray and the baking tray, are inserted horizontally in the same way as the wire shelf.

REMOVING AND REFITTING THE SHELF GUIDES

- To remove the shelf guides, lift the guides up and then gently pull the lower part out of its seating: The shelf guides can now be removed.
- To refit the shelf guides, first fit them back into their upper seating. Keeping them held up, slide them into the cooking compartment, then lower them into position in the lower seating.

FITTING THE TELESCOPIC RAILS

Remove the shelf guides from the oven and remove the protective plastic from the sliding runners. Fasten the upper clip of the runner to the shelf guide and slide it along as far as it will go. Lower the other clip into position. To secure the guide, press the lower portion of the clip firmly against the shelf guide. Make sure that the runners can move freely. Repeat these steps on the other shelf guide on the same level.

FIRST TIME USE

SET THE TIME

You will need to set the time when you switch on the appliance for the first time. The display will show “12:00”. You can only set the clock when the oven is in standby mode.

Press ∧ or ∨ to set the current hour and press the “🕒” button. The two digits for the minutes will flash on the display. Press ∧ or ∨ to set the minutes and press “time icon” to confirm.

HEAT THE OVEN

A new oven may release odours that have been left behind during manufacturing: this is completely normal. Therefore, before starting to cook food, we recommend heating the empty oven in order to remove any possible odours. Remove any cardboard or transparent film from the oven and remove any accessories from inside it. Heat the oven to 200 ℃ for about an hour. The oven must be empty during this time. Follow the instructions for setting the function correctly.

Please note: We recommend ventilating the room after using the appliance for the first time.

FUNCTIONS & DAILY USE

FUNCTIONS

	CONVENTIONAL Uses upper and bottom heating element Select a temperature between 30 °C and 260 °C. For cooking any kind of dish on one shelf only.
	CONVECT BAKE Uses top and bottom heating elements, together with the fan. Constant heat distribution throughout the cavity. Select a temperature between 30 °C and 260 °C. Recommended for cooking pre packaged food quickly. Best results when cooking, refer to “Practical Cooking Advice”.
	FORCED AIR Uses the heating element from the rear and the fan to ensure delicate even heat distribution throughout the oven. Select a temperature between 30 °C and 260 °C. Ideal for baking and cooking delicate food on 3 shelves at the same time. Recommended for cakes that need to rise, cream puffs, sweet and savory biscuits, savory puffs, swiss rolls, small portions of vegetables au gratin, etc.
	PIZZA Uses forced air and bottom heating elements making it perfect for baking pizza. The fan and heating element works together to circulate hot air For even cooking and melting toppings, while the bottom heating element ensures a crispy base.

	DEFROST Bottom heating with fan to circulate the air at room temperature. To speed up defrosting of food especially delicate food (eg. ice cream, cakes, cream, custard desserts, fruit cakes). For defrosting meat, fish and bread, it is recommended to use “Forced Air” mode (Temperature: 30 °C and 260 °C) to accelerate the process.
	GRILL Uses radiant heat from powerful upper element. Select a temperature between 80 °C and 230 °C . Recommended for grilling tender cuts of meat, steak, chops, sausages, fish, cheese toasts. Preheat the grill for 3 mins to get the best results. Slide the grill dish into either of the 2 spaces within the upper pairs of support rails.
	MAXI GRILL Uses direct radiant heat from 2 powerful upper elements. Cook faster than a normal “Grill”. Select a temperature between 80 °C and 230 °C . Recommended for grilling tender cuts of meat, steak, chops, sausages, fish, cheese toasts. Preheat the grill for 3 mins to get the best results. This will help seal in the natural juices of the meat for a better flavour.
	TURBO GRILL Uses top central heating and fan. Select a temperature between 80 °C and 230 °C Grill element turns on and off to maintain the set temperature while the fan circulates the heat air. Keep the door closed to ensure food is fully cooked. Recommended for large cuts of meat. Put the food on the 2nd or 3rd rack from the bottom. Put the deep tray on the lowest shelf to collect the oil or juice. It is not required to turn the food over when using this mode.
	MULTI-COOK Uses the top and circle heating elements together with the fan. Select a temperature between 50 °C and 260 °C . Able to cook various dishes at the same time with the same cooking temperatures. A maximum of 2 racks can be used at the same time. Recommended for dishes requiring a gratin finish or those requiring prolonged cooking times (eg. lasagna, baked pasta, roast chicken, potatoes, etc.), cooking fish, vegetable-based side dishes and baking leavened cakes.
AirFry	**AIR FRY** Uses the top and circle heating elements together with the fan. To be used with the air fry basket. Select a temperature between 150 °C and 230 °C. Advanced convection cooking function without having to turn the food, giving crispy great tasting results in a shorter time without all the oil. Suitable for french fries, chicken wings and nuggets.

	DELICATE COOK Uses bottom heating element and fan. Select a temperature between 50 °C and 230 °C. Suitable for pastries, cakes and non-dry sweets in baking tins. Excellent results are also obtained in cooking requiring above all heat from the bottom. Recommended to put the food on a low level.
ECO	**ECO FORCED AIR** Uses the rear heating element and fan. Food is prevented from drying out excessively by gentle, intermittent air circulation. Select a temperature between 40 °C and 230 °C. When this ECO function is in use, the light will remain switched off during cooking. To use the ECO cycle and therefore optimise power consumption, the oven door should not be opened until the food is completely cooked. For baking and cooking delicate foods-especially cakes that need to rise-and for the preparation of certain tartlets on 3 shelves at the same time.
	SMART CLEAN The action of steam released during this special low-temperature cleaning cycle allows dirt and food residues to be removed with ease. Remove all accessories from the oven when activating the Smart Clean function. Pour 150ml of drinking water on the bottom of the oven then set the function to and temperature to 220°C. Set time to 20-30 minutes. Allow it to cool and wipe with a wet cloth. Note: Activate the function when the oven is cold.

DAILY USE

1. SELECT A FUNCTION

Press to switch on the oven: the display will show the last running main function or the main menu. The functions can be selected by pressing the To select an item from a menu (the display will show the first available item), press or to select the desired one.

2. SET A FUNCTION

After having selected the function you require, you can change its settings.

TEMPERATURE/GRILL LEVEL

Press then press or to change its setting.

DURATION

Press several times until the begins to flash on the display. Press or to change its setting, the oven will automatically start to work after 3 seconds flash.

END TIME (START DELAY)

In many functions, once you have set a cooking time you can delay starting the function by programming its end time.

Press ⏲ several times until the begins to flash on the display. To set the time you want cooking to end, press ∧ or ∨ to set the required time, then the oven will automatically start to work after 3 seconds flash. Place the food in the oven and close the door: The function will start automatically after the period of time that has been calculated in order for cooking to finish at the time you have set.

3. PREHEATING

It shall have beep sound after preheating finished.

4. CHILD LOCK

To lock the control panel, press ⏲ and ⧉ at the same time and hold for 3 seconds, the will appear on the display. Do this again to unlock the control panel. Please note: This function can also be activated during cooking. For safety reasons, the oven can be switched off at any time by pressing ⏻.

5. FAVORITES

If you would like to save a function as a favorite and store the current settings for future use, select the function, temperature and cook time/end time (if necessary) and then press and hold the button for 2 seconds until an audible signal sounds. Please note: The previously saved setting will be overwritten when a new setting is saved.

To call up the function you have saved at a later time, press and hold the for 3 seconds into the memory function. An audible signal will sound, which indicates that the favorites is set.

Press and hold the button for another 3 seconds, the memory function is obtained. Wait for another 5 seconds to open the memory function.

6. PYRO SELF CLEANING

For eliminating cooking spatters using a cycle at very high temperature. Three self-cleaning cycles with different durations are available: High, Medium, Low.

Standard	Degree of self-cleaning	Duration
1	Low	Approx. 2 hours
2	Medium	Approx. 2.5 hours
3	Strong	Approx. 3 hours

We recommend using the quicker cycle at regular intervals and the complete cycle only

when the oven is heavily soiled.

- **Do not touch the oven during the Pyro cycle. Keep children and animals away from the oven during and after (until the room has finished airing) running the Pyro cycle.**
- Remove all accessories - including shelf guides - from the oven before activating the function. If the oven is installed below a hob, make sure that all the burners or electric hotplates are switched off while running the self cleaning cycle.
- For optimum cleaning results, remove excessive residuals inside the cavity and clean the inner door glass before using the Pyro function.
- Choose one of the available cycles according to your needs.

7. PROBE

Using the probe enables you to measure the core temperature of the meat during cooking to ensure that it reaches the optimum temperature. The temperature of the oven varies according to the function that you have selected, but cooking is always programmed to finish once the specified temperature has been reached. Place food in the oven and connect the food probe to the socket. Keep the probe as far away from the heat source as possible.

COOKING TABLE

FOOD CATEGORIES	FUNCTION	WEIGHT (KG)	PREHEAT (MIN)	TEMPERATURE (℃)	DURATION (MIN)	LEVEL
Biscuits (Short Pastry)		-	15	180	15-20	3
		0.3	-	200	15-18	2
Biscuits (on multi-level racks)		0.5	10	180	10-15	2-4
		0.7	15	180	20-25	1-3-5
Tarts		1	15	180	30-35	3
		0.5	15	180	20-30	3
Savory Pies		1.5	15	200	25-30	3
Sponge Cake (on 1 rack)		0.5	10	170	15-20	2
		0.5	15	160	25-30	3
Sponge Cake (on 2 racks)		1	10	170	20-25	2-4
Plum Cake		1	10	170	40-50	2
Fruit Cakes		1	15	180	40-45	2/3

		0.7	15	180	40-50	3
		0.6	-	180	45	2
Small Cakes		0.6	15	190	20-25	2-4
Cream Puffs (on multi-level racks)		0.5	10	190	20-25	2-4
		0.7	15	180	20-25	1-3-5
Cheese Puffs		0.4	15	190	20-25	2-4
		0.2	-	210	10-12	2
Pizza (on 2 racks)		1	15	220	15-20	2-4
Frozen Pizza		0.3	-	250	12	2
Frozen Zucchini and Prawn Pie		0.4	-	200	20	2
Frozen Country Style Spinach Pie		0.5	-	220	30-35	2
Frozen Golden Rolls		0.4	-	180	25-30	2
Frozen Chicken Morsels		0.4	-	220	15-20	2
Frozen Lasagna		0.5	-	200	35	2
Frozen Chicken Nuggets/Crumbed Fish		1	5	230	15	3
Frozen Chips		1	5	220	15	3
Lasagna		1	10	200	30-35	3
Stuffed Pancakes		1.2	15	200	30-35	2-4
Toasted Sandwiches		-	5	Max	2-3	4
		-	5	200	2-3	4
Grilled Chicken		1.5	5	200	55-60	3
Roast Chicken + Potatoes		1	10	180	60-75	2-4
Pre-cooked Chicken Wings		0.4	-	200	20-25	

Chicken Drumettes/wings (with dry rub)		1	5	230	15	3
Duck		1	15	200	65-75	3
Roast Veal or Beef		1	15	200	70-75	3
Veal Steak		1	5	Max	15-20	4
		1	5	200	15-20	4
Scotch Fillet Steak (seared first)		1	5	220	8	3
Cutlets		1	5	Max	15-20	4
		1	5	200	15-20	4
Pork Roast		1	15	200	70-80	3
Hamburgers		1	5	Max	7-10	4
		1	5	200	7-10	4
Lamb		1	10	180	50-60	2
Mackerel		1	10	180	30-35	2
		1	5	Max	15-20	4
		1	5	200	15-20	4
Soles and Cuttlefish		1	5	Max	8-10	4
		1	5	200	8-10	4
Cuttlefish		1.5	5	200	30-35	3
Squid and Prawn Kebabs		1	5	Max	6-8	4
		1	5	200	6-8	4
Cod Fillet		1	5	Max	10	4
		1	5	200	10	4

Fresh Barramundi Fillet (with crumb)		1	5	230	15	3
Grilled Vegetables		1	5	Max	10-15	3/4
		1	5	200	10-15	3/4
Potatoes cut into wedges		0.5	5	230	14	3

*Cooking durations are approximate and may vary according to personal taste.
*When cooking with Grill or Turbo Grill, a deep tray must always be placed on the 1st rack from the bottom.

HOW TO READ THE COOKING TABLES

The tables list: recipes, if preheating is needed, temperature (°C), grill level, cooking time (minutes) and level suggested for cooking. Cooking times start from the moment food is placed in the oven, excluding preheating (where required). Cooking temperatures and times are approximate and depend on the amount of food and the type of accessory used. Use the lowest recommended values to begin with and, if the food is not cooked enough, move on to higher values. Use the accessories supplied and preferably dark-coloured metal cake tins and oven trays. You can also use pans and accessories in pyrex or stoneware, but bear in mind that cooking times will be slightly longer. To obtain the best results, carefully follow the advice given in the cooking table.

FUNCTIONS	Conventional	Multi-Cook	Grill	Maxi Grill	Turbo Grill	Forced Air	Convect Bake	Pizza	Air Fry

CLEANING & MAINTENANCE

Make sure the oven has cooled down before carrying out any maintenance or cleaning. Do not use steam cleaners. Do not use wire wool, abrasive scourers or abrasive/corrosive cleaning agents, as these could damage the surfaces of the appliance. Wear protective gloves. The oven must be disconnected from the mains before carrying out any maintenance work.

EXTERIOR SURFACES

Clean surfaces with a damp microfiber cloth. If they are very dirty, add a few drops of pH - neutral detergent. Finish off with a dry cloth. Do not use corrosive or abrasive detergents. If any of these products inadvertently comes into contact with the surfaces of the appliance, clean immediately with a damp microfiber cloth.

INTERIOR SURFACES

After every use, leave the oven to cool and then clean it, preferably while it is still warm, to remove any deposits or stains caused by food residues. To dry any condensation that has

formed as a result of cooking foods with a high water content, leave the oven to cool completely and then wipe it with a cloth or sponge. Activate the “Smart Clean” function for optimum cleaning of internal surfaces. Clean the glass in the door with a suitable liquid detergent.

ACCESSORIES

Soak the accessories in a washing-up liquid solution after use, handling them with oven gloves if they are still hot. Food residues can be removed using a washing-up brush or a sponge.

REMOVING AND REFITTING THE DOOR

To remove the oven door for better access to the oven when cleaning, follow the below:

1. Open the door fully (Fig. 1)
2. Lift up and turn the latch **A** situated on each of the two hinges (Fig. 2)
3. Hold the door as shown in Fig. 3 and close the door gently until latch **A** of the two hinges are hooked to part **B** of the door (Fig. 4)
4. Grip the door on the two external sides and close it like Fig. 3 & 4
5. Withdraw the hinge hooks from their location following arrow **C** (Fig. 4)
6. To refit the door, repeat the above steps in reverse order

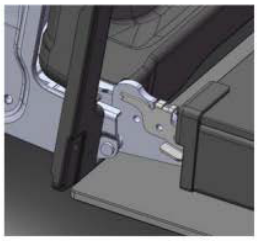

Fig. 1

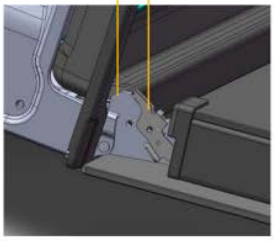

Fig. 2

Fig. 3

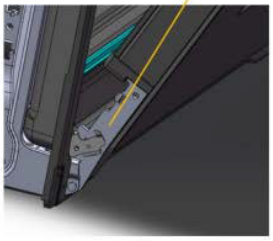

Fig. 4

REMOVING THE INNER PANE OF GLASS

- Remove the seal G by unscrewing the 2 bolts (Fig. 1)
- Gently pull out the inner pane of glass (Fig. 2)
- Clean the glass with an appropriate cleaner. Dry thoroughly, and place on a soft surface. Now you can clean the inside of the outer glass.

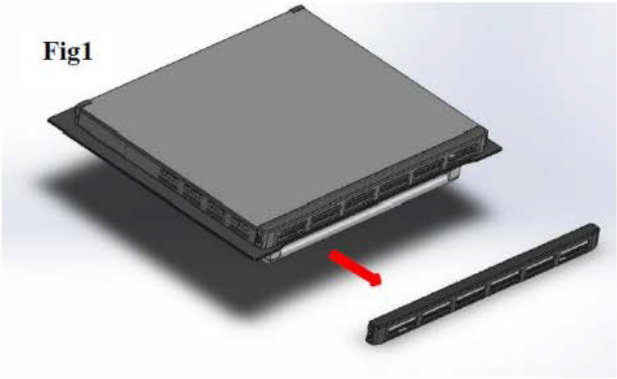

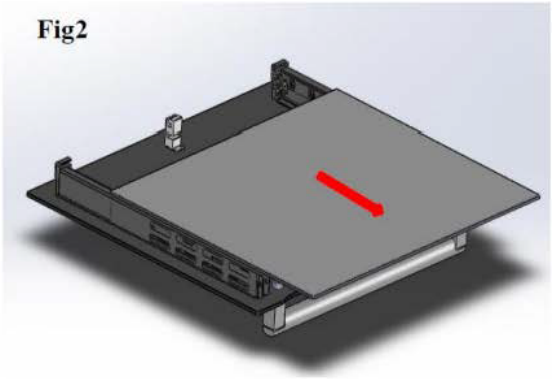

REPLACING THE LAMP

Disconnect the oven from the power supply, remove the cover from the light, replace the bulb and fit the cover back on the light. Reconnect the oven to the power supply. Do not use the oven until the light cover has been refitted.

Please note: Only use 25W/220-240V, G9 type. The bulb used in the product is specifically designed for domestic appliances and is not suitable for general room lighting within the home. Light bulbs are available from our After-sales Service.

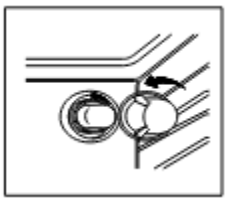

TROUBLESHOOTING

What to do if…	Causes/Solutions
Oven does not heat up	● Oven may not be switched on. Switch the oven on. ● The clock may not be set. Set the clock. ● Check to see if the required settings have been applied. ● A household fuse may have blown or a circuit breaker may have tripped. Replace the fuses or reset the circuit. If this happens repeatedly, call an authorised electrician.
A noise can be heard after a cooking programme	Cooling fan remains switched on after the end of a cooking programme.
The lighting is not working 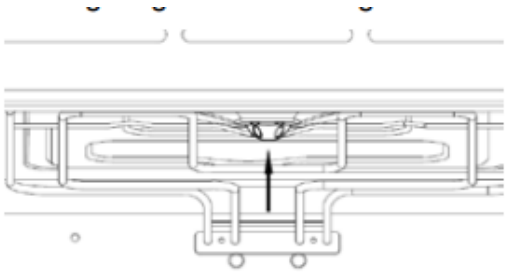	● Disconnect the appliance from the electricity supply: Switch off and unplug at the socket, or disconnect the fuse, or switch off at the isolator as appropriate. Turn the lamp glass cover anti-counterclockwise to remove it. ● Remove the metal ring and clean the glass cover. ● Replace the lamp with a new G9 lamp. ● Attach the metal ring to the glass cover. ● Install the glass cover.
Cakes and biscuits are browning unevenly	There will always be a slight unevenness. If browning is very uneven, check that the correct temperature is set and that the correct shelf level is used.
“HE1” A fault code appears in the display	Temperature sensor error. Contact local after-sales service centre.
“HE2” A fault code appears in the display	Probe temperature sensor error. Contact local after-sales service centre.

AFTER-SALES SERVICE

To receive complete assistance, please register your product in your local market. Call the number shown on the warranty booklet or follow the website's instructions on:

Australia: www.whirlpool.com.au
New Zealand: www.whirlpool.co.nz

When contacting our Client After-sales service, always specify:

- A brief description of fault;
- The type and exact model of the appliance;
- The serial number (on the rating plate located at the front edge of the oven; visible when the door is open);
- Your full address;
- Your telephone number

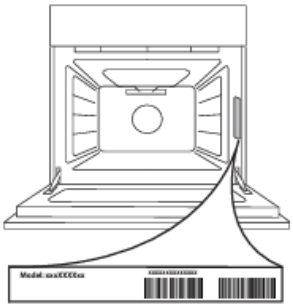

REGISTER YOUR PRODUCT ONLINE

For Australia Market

Scan QR Code to visit
www.whirlpool.com.au
to register your product warranty online.

This QR Code is only applicable to Australia.
You can download the user manual by

- Visiting our website www.whirlpool.com.au
- Contacting our Customer Service Center at 1300 363 344

For New Zealand Market

Scan QR Code to visit
www.whirlpool.co.nz
to register your product warranty online.

This QR Code is only applicable to New Zealand.
You can download the user manual by

- Visiting our website www.whirlpool.co.nz
- Contacting our Customer Service Center at 0800 442 584

Whirlpool® Registered Trademark/TM Trademark of Whirlpool group of companies
All rights reserved - http://www.whirlpool.com.au
- http://www.whirlpool.co.nz

EN

Whirlpool