Instruction Manual

SAMCOM T5F
FRS Two-way Radio

Main Features

- Flashlight
- FM Funtion
- Roger Tone
- 22 Channels
- 10 Call Tones
- Group Function
- IP67 Waterproof
- Key Lock Function
- AI Noise Reduction
- SOS Flashing Function
- NOAA & Weather Alert
- 2000mAh Li Polymer Battery
- Scan & 3 VOX Levels & Monitor
- 121 Codes (38 CTCSS & 83 CDCSS)
- High/Low TX Power Configured To Designated Channels
- Frequency: 462.5500~462.7250MHz,467.5625~467.7125MHz

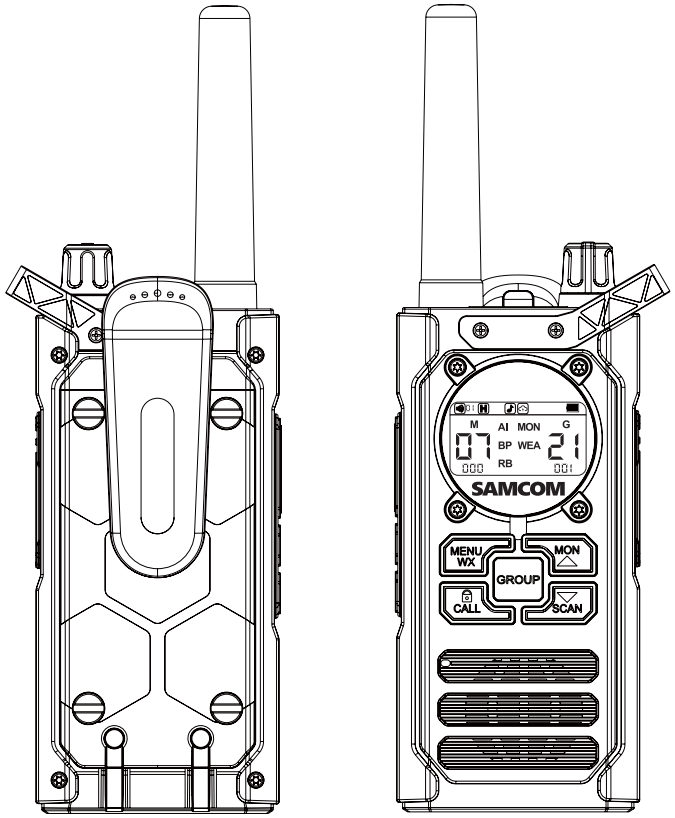

Overview

1. LCD Display
2. Earphone & Charger Jack
3. Push-To-Talk (PTT) Key
4. Up / Monitor Key
5. Down / Scan Key
6. Power / Volume Knob
7. Group Key
8. Menu / WX Key
9. Call Tone /Key-Lock Key
10. Microphone
11. Speaker
12. Antenna
13. LED Flashlight
14. Flashlight Key
15. FM Key
16. Position For Lanyard

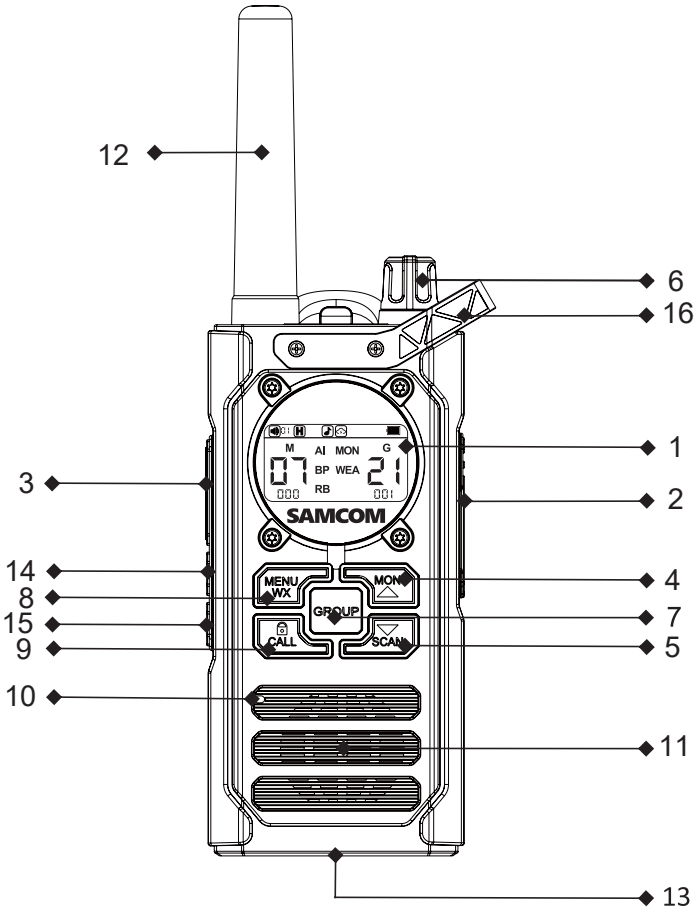

LCD Display Icons

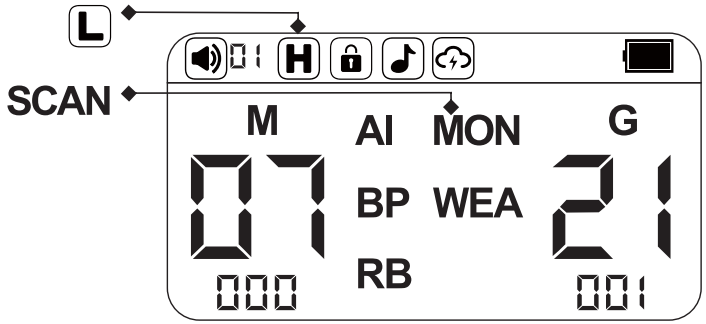

1		: Volume
2		: Keyboard Lock
3	H	: High Power Mode
4	L	: Low Power Mode
5		: Call
6		: Weather Alert
7		: Battery Level
8	M	: Main Channel
9	G	: Group Channel
10	07	: Channel Number
11	21	: Group Channel Number
12	AI	: AI Noise Reduction
13	MON	: Monitor
14	BP	: Beep Tone
15	WEA	: Weather Receiver
16	RB	: Roger Tone
17	000	: CTCSS/CDCSS Code Number

Press the MENU key 1 time, enter into the menu selecting mode. Press and hold the WX key for 3s, enter into the WX mode.

Short press ▲ is the function of the up key. (Press and hold the MON key to enter into the MON mode.) Short press ▼ is the function of the down key. (Press and hold the SCAN key to enter into the SCAN mode.)

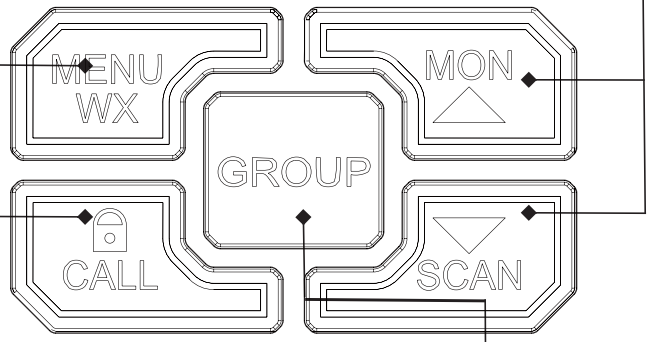

Press the CALL key to turn on the Call Alert Function Press and hold the 🔒 key for 3s to lock and unlock the keyboard.

Instantly broadcast to all users with the dedicated **GROUP** button.

FIRST OPERATION

You need to install the battery first.

Install / Removing Battery door and Belt Clip

Installing Battery Door

- Put the battery door flat on the radio, then use a flathead screwdriver to hit the battery door screw just like the image shows on the right.

Removing Battery Door

- Use flathead screwdriver to unscrew it to remove the battery door.

Installing Belt Clip

- Slide the Belt clip into the slot. A “click” sound indicates the Belt Clip is locked into position.

Removing Belt Clip

- Push the latch of belt clip in (step 1)
- While pushing the belt clip latch, push up the belt clip at the same time (step 2).

Battery on First Use

Since batteries leave factory without a fully charging, please charge the new batteries before using. Under normal circumstances, the battery on first use needs 5 hours of charging. When you find out the battery is low, it is required to charge or replace it.

Safety Precautions

1. Do not disassemble.
2. Do not dispose the batteries in the fire.
3. Do not dispose the batteries as household wastes, and it must be collected and treated properly.
4. Do not charge or charge battery in hazardous location.
5. Do not short-circuit the terminals.

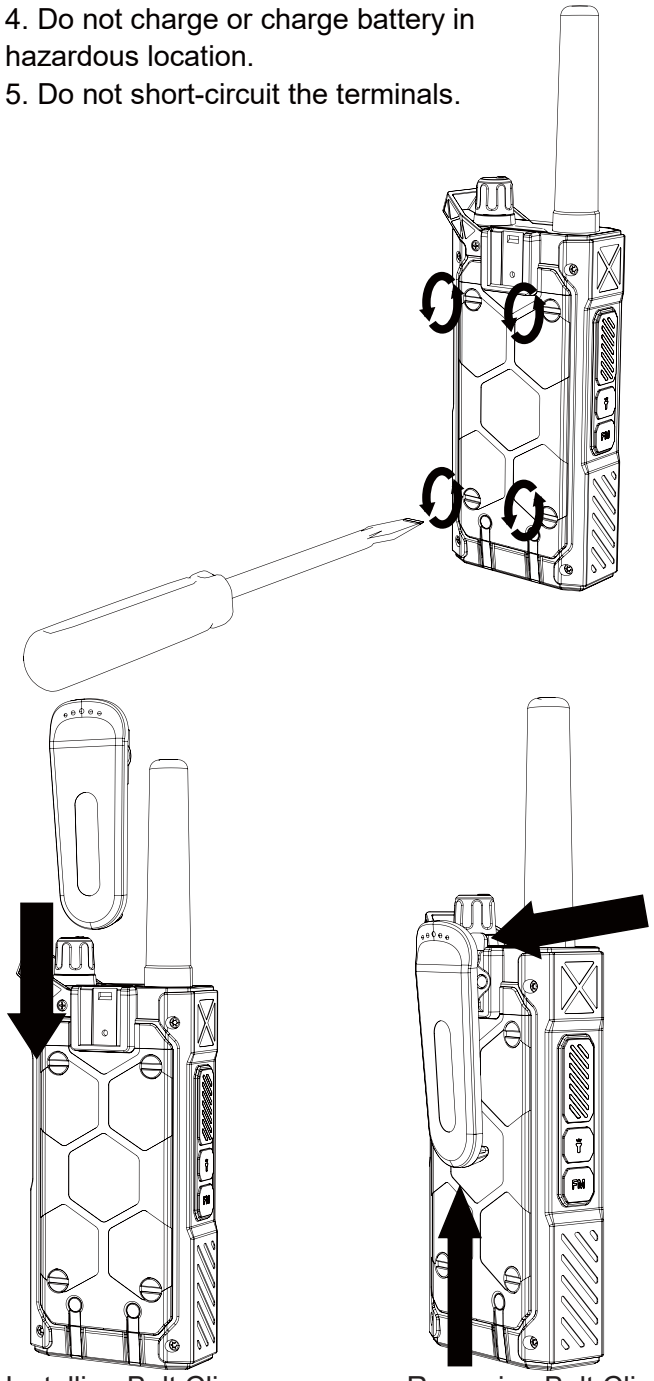

Installing Belt Clip　　Removing Belt Clip

Notes:

1. When charging, the temperature should be between 5℃ ~40 ℃,otherwise it may cause the leakage or even damage the battery.
2. Please shut down the transceiver with battery loaded before charging it. The use of the transceiver while charging is ongoing will affect the normal battery charging.
3. Do not charge the battery when it is wet. You should dry it first in order to avoid any danger.
4. If the battery's usage time is very short even when it has been charged in completely correct way, it can be concluded that the battery life is due and should be replaced by a new one.

Extension of Battery life

1. The performance of the battery will be reduced when the temperature drops below 0℃. In cold weather, it is advised to spare another battery for emergency. Please do not dispose the cold batteries that can not work at low temperature but may be usable at room temperature.
2. It may affect the normal use or charge of the battery, if it is covered with dust. Please clean the battery with dry cloth before loading or charging it.

Knowledge about Battery Storage

1. Since the battery will self-discharge, please do charge it fully before putting it aside so as to prevent damages caused by over discharge.
2. Please fully charge the battery after long time storage, in order to avoid the reduction of the battery capacity resulting from over discharge. It is proposed for lithium-ion / lithium-polymer batteries to be filled in every 6 months of storage.
3. Please pay attention to the humidity of the battery storage environment. Batteries are supposed to be stored in the environment of room temperature, cool and dry air, to reduce the self-discharge.

CHARGING

When the "Battery level is low, that is the icon / you need to charge the battery with the enclosed charging-cable.

Flexible Charger

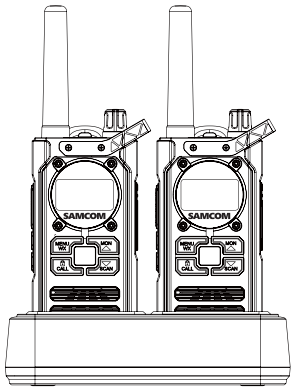

Dual charging base

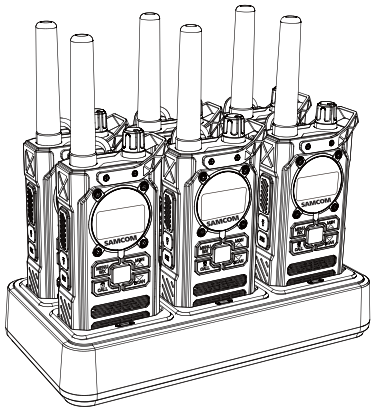

Six charging base

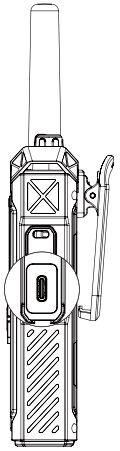

Type-C charger

USB-A to Type-C charging cable

Type-C to Type-C charging cable

The battery icon will continuously cycle when charging.

WARNING

- Please only use original accessories to prevent damage to the radio.
- The radio will be slightly warm during charging.

GENERAL OPERATIONS

Before performing any operation,you need to first install the walkie talkie battery.

1. POWER ON/OFF

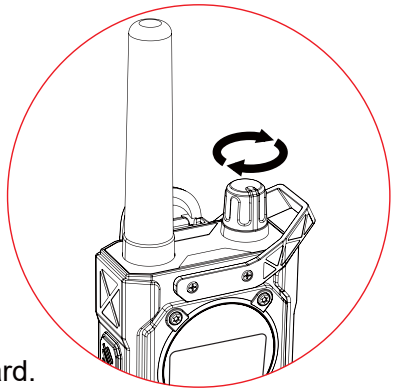

● Rotate the PWR/VOL control knob clockwise until a" ka-ka "sound is heard to turn on the radio. When you receive calls,the knob provides you the ability to change the volume for your listening habits.When shutting down the radio,you need to rotate it counterclockwise a "ka-ka" sound is heard.

2. MAKING COMMUNICATIONS

The radio has 22 main frequencies and 121 CTCSS/CDCSS codes.

You can communicate with any other user using the same channel within range.

● The talk range depends on the environment and terrain. Don't try to use two units which are less than 1.5m(5feet) apart. otherwise,two radios might cause interference.

3. SPEAK TO OTHER RADIO

● Press & hold thePTT key,the "M" character on the LCD turns red.

When the PTT button is released and the transmission ends, the "M" character returns to white.

● Hold the radio in a vertical position with the microphone 2.5 cm from your mouth and then speak.

● When you finish speaking, release the PTT key.

4. LISTEN TO OTHER RADIO

● The radio will automatically sound received signal form the other radio with the same channel and code.

When the main channel has received a signal, LCD shows the "M" character in green. If the GROUP channel has received a signal, LCD shows the "G" character in green.

● When you press the PTT key, you can't listen to other radios. Make sure you do not press PTT key for listening.

● Adjust volume control if necessary.

5. GROUP FUNCTION (Dual Channel Standby and Either of Dual Channels Transmitting)

The function enables the radios to monitor two channels at the same time in standby mode and transmitting on either of two channels at a time. The two channels that we call PTT-Channel and Group-channel respectively can be set in Menu.

When the radio detects a signal on Group channel, it will automatically sound the received signal with LCD showing, Group channel number and associated code number.

When you want to talk to a group of people that have their radios set Group Channel number and associated code number to be the same as yours, just do the following.

● Press & hold the **GROUP** key, the "G" character on the LCD will display in red,indicating the radio is transmitting on Group channel.

● When you finish speaking, release the **GROUP** key. And after the transmission ends, the "G" character will return to white.

6. SENDING CALL TONE

You can use 1 of 10 different "Call Tones" to get attention of other user on the same channel with same code.

● Press The CALL key and will hear the tone, When sending the CALL TONE, the "M" character on the LCD is displayed in red and the receiving radio will sound the tone too.

7. SCANNING CHANNELS

● Press and hold the SCAN key for 3 seconds, LCD will display the word "SCAN" without any related icons and radio will start scanning.

● LCD display shows the scanning channel one by one.

● It will stop at those channels with signal for a while.

● Press the **GROUP** key to turn off the function.

8. MONITOR FUNCTION

- Press and hold the MON ▲ key for 3 seconds to have the unit sound signal or noise, whichever occurs on the main channel.
- Press the MON ▲ or **GROUP** or **PTT** key to turn off the function.

The function is useful to check for activity on the main channel before you talk. When you find the main channel busy, you can change the main channel number to a clear one. Moreover, it also can be handy for the user to verify the volume level of the radio when the radio is not receiving.

9. LOCK KEYS

- Press and hold CALL key for 3 seconds, LCD display icon.
- All keys are locked except **PTT** , **GROUP** keys and **Flashlight** key.
- To unlock, press and hold CALL key for 3 seconds again.

10. MICROPHONE / EARPHONE JACK

The unit is equipped with a microphone / earphone jack located at the right side. You can use an optional earphone (included) for handsfree function.

11. FLASHLIGHT FUNCTION

To use the flashlight function

- When the flashlight is not illumining, press the Flashlight key once to turn and keep it on.
- When the flashlight is illumining, press the Flashlight key to turn it off.
- Long press for SOS flashing function.

MENU OPERATIONS

Press Menu key once to firstly enter main channel selection from the main screen, press again for next function selection etc. The menu operation flow chart is as follows.

Main Screen → Main Channel → CTCSS/CDCSS → GROUP Main Channal(Dual Channel Standby) → GROUP CTCSS/CDCSS → VOX → Call Tone →Roger Beep → Key Beep → AI Noise Reduction → Main Screen

1. SELECT MAIN CHANNEL

To select the main channel

- Press the MENU WX key 1 time, Main channel number will flash.
- Press MON ▲ or ▼ SCAN to select new main channel
- Press the **GROUP** or **PTT** key to confirm and revert back to the main screen, or the MENU WX key to confirm and continue next function setting.

You have 10 seconds to decide before auto-reverting back to the main screen

2. CTCSS/CODE FUNCTION

This function can help you select your group (38 CTCSS /83 CDCSS codes) of users on the same channel.

Only the users with the same CTCSS/CDCSS code can listen and talk to each other. (When you set it to code 0, you can listen to all the codes.)Please note that selecting a CTCSS/CDCSS code does not assure total privacy.

- Press the MENU WX key 2 times, CTCSS/CDCSS code will flash.
- Press MON ▲ or ▼ SCAN to select new CTCSS or CDCSS code
- Press the **GROUP** or **PTT** key to confirm and revert back to the main screen, or the MENU WX key to confirm and continue next function setting.

3. SELECT GROUP MAIN CHANNEL

This function enable the radio to dual channel standby. The two way radio can monitor 2 channals at the same time and able to transmit on the secondary channal by simply pressing the GROUP button.

NOTE: The default GROUP number is 21, you can set your own group number and code :

To change the GROUP Number

- Press the MENU WX key 3 times, GROUP channel number will flash.
- Press MON ▲ or ▼ SCAN to select new Group Channel or turn off the function.
- Press the **GROUP** or **PTT** key to confirm and revert back to the main screen, or the MENU WX key to confirm and continue next function setting.

4. GROUP CTCSS/CODE FUNCTION

To set GROUP CTCSS/CDCSS code

- Press the MENU WX key 4 times, GROUP CTCSS/CDCSS code will flash.
- Press MON ▲ or ▼ SCAN to select new CTCSS or CDCSS code.
- Press the **GROUP** or **PTT** key to confirm and revert back to the main screen, or the MENU WX key to confirm and continue next function setting.

5. VOX (Hands-Free Function)

The unit has a built-in Voice Activated Circuit (VOX) function. You can enjoy talking and listening without pressing PTT key. To have better performance, you can use this function with the external earphone (optional accessories).

- Press the MENU WX key 5 times, LCD displays **VOX** icon and VOX sensitivity setting will flash.
- Press MON ▲ or ▼ SCAN to choose VOX sensitivity setting.

VOX sensitivity level from " OFF,001,002,003" for "OFF, Low, Medium and High" respectively. After turning on the VOX function, LCD will display **VOX** icon. Press the **GROUP** or PTT key to confirm and revert back to the main screen, or the MENU WX key to confirm and continue next function setting. Please speak close to the mic in order to activate VOX function.

6. SELECTING CALL TONE

- Press the MENU WX key 6 times, LCD will display ♪ icon and call tone number will flash.
- Press MON ▲ or ▼ SCAN to scroll between 1 to 10 and you can choose the call tone you like. You can also choose 'OFF' to close the call tone.
- Press the **GROUP** or **PTT** key to confirm and revert back to the main screen, or the MENU WX key to confirm and continue next function setting.

7. ROGER BEEP

The roger beep function enables a short tone signal which is transmitted after releasing the PTT button.

- Press the MENU WX key 7 times, LCD displays the **RB** icon.
- Press MON ▲ or ▼ SCAN to turn the Roger beep on or off.
- Press the **GROUP** or **PTT** key to confirm and revert back to the main screen, or the MENU WX key to confirm and continue next function setting.

8. KEY BEEP

The unit has the function to turn the key beep on or off.

- Press the MENU WX key 8 times, LCD displays the **BP** icon.
- Press MON ▲ or ▼ SCAN to turn the key beep on or off.
- Press the **GROUP** or **PTT** key to confirm and revert back to the main screen, or the MENU key to confirm and continue next function setting.

9. AI Noise Reduction

- Press MENU nine times, and the LCD will display the "AI" character.
- Press MON or SCAN to set AI ON or OFF.
- Press GROUP or PTT to confirm and return to the main interface.

WEATHER RECEIVER (WX) FUCNTION

The radio has the capability to tune in to broadcasts by the United States National Oceanic and Atmospheric Administration (NOAA) Weather Radio and Environment Canada Weather Radio. You can listen to a weather channel or set your radio to alert you to emergency weather broadcasts that interrupt routine broadcasts. When you listen to a weather channel, you cannot use your radio in scan mode or for two-way communications.

Entering the WX Mode

- Press and hold the key for 3 seconds to enter into WX mode, the LCD will display the icon **WX**

Setting the WX Channel

- In WX mode, press MON ▲ or ▼ SCAN and the WX channel number flashes.
- Press MON ▲ or ▼ SCAN to select the appropriate channel with good reception in your area.
- Press the MENU WX key to confirm the channal number and continue setting WX.

Setting the WX Alert

The radio can be set to respond to NOAA Weather Radio emergency messages. A special alarm tone sounds an alert and turns on the WX to give you immediate weather and emergency information.

- In WX mode, press MENU WX 1 times and the icon shows.
- Press MON ▲ or ▼ SCAN to turn the WX alert function On or OFF.
- Press MENU WX key to confirm and exit setting WX.

Exiting the WX Mode

- In WX set mode, press and hold the key MENU WX for 3 seconds or press GROUP or PTT key to exit WX mode and return to two-way radio mode.
- After the WX mode is activated either manually or by receiving an alert, if no keys are pressed for 5 minutes, the WX mode will automatically revert back to two-way radio mode.

If you turn on the WX alert function and return to two-way radio mode, the LCD will display the icon on the main screen, which means the WX alert function has been activated and the radio can detect the weather channel signal and two-way radio channel signal at the same time.

New addition:
FM Function
Pressing the A side FM button once enters the FM mode. The LCD will switch to display the FM-related background, and the status bar will show the FM icon and the corresponding frequency.
In the FM mode:

- Short press the side FM button to exit the FM mode.
- Short press the MON or SCAN button to adjust the FM frequency once.
- Long press the MON or SCAN button for 3 seconds to enter the FM automatic frequency scanning mode, which will scan for signals upwards or downwards. When a signal is detected, the scanning will stop and the signal will be received.

When there is a signal received on the walkie-talkie channel, it will return to the walkie-talkie interface. After the reception ends and waits for 8 seconds, it will automatically return to the FM mode.

- Pressing the PTT or GROUP button will return to the walkie-talkie interface for transmission. After the transmission ends and waits for 8 seconds, it will automatically return to the FM mode.

Waterproof IP67

- Ingress Protection Rating of this radio is up to IP67 standard. When the battery cover and headset accessory port are properly sealed, the radio can be submerged under 1m water for 30 minutes without damage. Ensure your radio is in dry environment if you need to open battery compartment door or headset port, and install the battery and accessories. This will prevent water enter your radio through these interfaces, thus protecting the service life of the radio. If the radio immersed in water, in order to maintain audio quality, shake the radio quickly to remove the water in the speaker grille and microphone port.

Activate Lifetime Warranty

To extend your 1 year warranty to lifetime
Please register on our website to activate

SAMCOM

Technical Support

SAMCOM Support Team

Email Address : sanconsales@outlook.com
sanconmarketing2@outlook.com
Phone Number : 3853366504
FB Page : Samcom Radios
Website : www.samcom-radio.com

FRS Channel Configuration Chart

CH. No.	Frequency (MHz)	Default Associated Code No.	TX Power Option	CH. No.	Frequency (MHz)	Default Associated Code No.	TX Power Option
1	462.5625	1	High	**16**	462.5750	1	High
2	462.5875	1	High	**17**	462.6000	1	High
3	462.6125	1	High	**18**	462.6250	1	High
4	462.6375	1	High	**19**	462.6500	1	High
5	462.6625	1	High	**20**	462.6750	1	High
6	462.6875	1	High	**21**	462.7000	1	High
7	462.7125	1	High	**22**	462.7250	1	High
8	467.5625	1	Low				
9	467.5875	1	Low				
10	467.6125	1	Low				
11	467.6375	1	Low				
12	467.6625	1	Low				
13	467.6875	1	Low				
14	467.7125	1	Low				
15	462.5500	1	HIgh				

NOAA Weather (WX) Channel Frequency Chart

Weather Channel No.	Frequency (MHz)	Weather Channel No.	Frequency (MHz)	Weather Channel No.	Frequency (MHz)	Weather Channel No.	Frequency (MHz)
WX1	162.550	**WX4**	162.425	**WX7**	162.525	**WX10**	161.750
WX2	162.400	**WX5**	162.450	**WX8**	161.650	**WX11**	162.000
WX3	162.475	**WX6**	162.500	**WX9**	161.775		

CTCSS Code Frequency Chart

Code No.	Freq. (Hz)	Code No.	Freq. (Hz)	Code No.	Freq. (Hz)	Code No.	Freq. (Hz)	Code No.	Freq. (Hz)	Code No.	Freq. (Hz)	Code No.	Freq. (Hz)	Code No.	Freq. (Hz)
1	67.0	8	88.5	15	110.9	22	141.3	29	179.9	36	233.6				
2	71.9	9	91.5	16	114.8	23	146.2	30	186.2	37	241.8				
3	74.4	10	94.8	17	118.8	24	151.4	31	192.8	38	250.3				
4	77.0	11	97.4	18	123.0	25	156.7	32	203.5						
5	79.7	12	100.0	19	127.3	26	162.2	33	210.7						
6	82.5	13	103.5	20	131.8	27	167.9	34	218.1						
7	85.4	14	107.2	21	136.5	28	173.8	35	225.7						

CDCSS Octal Code Chart

Code No.	OCT Code	Code No.	OCT Code	Code No.	OCT Code	Code No.	OCT Code	Code No.	OCT Code	Code No.	OCT Code	Code No.	OCT Code	Code No.	OCT Code
39	023	52	074	65	165	78	271	91	413	104	565	117	731		
40	025	53	114	66	172	79	306	92	423	105	606	118	732		
41	026	54	115	67	174	80	311	93	431	106	612	119	734		
42	031	55	116	68	205	81	315	94	432	107	624	120	743		
43	032	56	125	69	223	82	331	95	445	108	627	121	754		
44	043	57	131	70	226	83	343	96	464	109	631				
45	047	58	132	71	243	84	346	97	465	110	632				
46	051	59	134	72	244	85	351	98	466	111	654				
47	054	60	143	73	245	86	364	99	503	112	662				
48	065	61	152	74	251	87	365	100	506	113	664				
49	071	62	155	75	261	88	371	101	516	114	703				
50	072	63	156	76	263	89	411	102	532	115	712				
51	073	64	162	77	265	90	412	103	546	116	723				

SAFETY AND GENERAL INFORMATION

Compliance with RF Exposure Standards
Your SAMCOM radio generates RF electromagnetic energy during transmit mode. This two-way radio is designed, manufactured and tested to comply with all applicable national and international regulations for human exposure to radio frequency electromagnetic energy.

Attention
This radio complies with IEEE and ICNIRP exposure limits for general population RF exposure environment at operating duty factors of up to 50% and is authorized by the FCC for general population use only. An appropriate warning label is affixed to all units. In order to comply with RF exposure requirements, a minimum distance of 2.5 cm must be maintained when held-to-face, and body-worn operations are restricted to the approved original accessories (belt clip), a minimum distance of 2.5 cm. Do not use this device when antenna shows obvious damages.

This product is compliance to FCC RF Exposure requirements and refers to FCC website https://apps.fcc.gov/oetcf/eas/reports/GenericSearch.cfm search for FCC ID: 2BPIZ -T5F to gain further information include SAR Values.

Changes or modifications not expressly approved by the party responsible for compliance could void the user's authority to operate the equipment.

This device complies with part 15 of the FCC Rules. Operation is subject to the following two conditions: (1) This device may not cause harmful interference, and (2) this device must accept any interference received, including interference that may cause undesired operation.

NOTE
This equipment has been tested and found to comply with the limits for a Class B digital device, pursuant to part 15 of the FCC rules. These limits are designed to provide reasonable protection against harmful interference in a residential installation. This equipment generates, uses and can radiate radio frequency energy and, if not installed and used in accordance with the instructions, may cause harmful interference to radio communications. However, there is no guarantee that interference will not occur in a particular installation. If this equipment does cause harmful interference to radio or television reception, which can be determined by turning the equipment off and on, the user is encouraged to try to correct the interference by one or more of the following measures:

- Reorient or relocate the receiving antenna.
- Increase the separation between the equipment and receiver.
- Connect the equipment into an outlet on a circuit different from that to which the receiver is connected.
- Consult the dealer or an experienced radio/TV technician for help.

Medical Devices
If you use a personal medical device, such as a pacemaker or hearing aid, consult the manufacturer of your device to determine if it is adequately shielded from RF energy. Your physician may be able to assist you in obtaining this information.

To ensure that your exposure to RF electromagnetic energy is within the FCC allowable limits, always adhere to the following CAUTION guidelines:

● **DO NOT** transmit for more than 50% of total radio use time ("50% duty cycle"). Transmitting more than 50% of the time can cause FCC RF exposure compliance requirements to be exceeded. The radio is transmitting when the "TX indicator" shows on LCD. You can cause the radio to transmit by pressing the " PTT" switch.

● **ALWAYS** use SAMCOM authorized accessories (antennas, batteries, belt clips, speaker/mics, etc). Use of unauthorized accessories can cause the FCC RF exposure compliance requirements to be exceeded. Body-worn operations are restricted to belt-clips, holsters or similar accessories that have no metallic component in the assembly and that provide at least 2.5 cm separation between the device, including its antenna, and the user's body. To provide the recipients of your transmission the best sound quality, hold the antenna at least 2.5 cm from mouth, and slightly off to one side. The information listed above provides the user with the information needed to make him or her aware of RF exposure, and what to do to assure that this radio operates within the FCC RF exposure limits of this radio.

Electromagnetic Interference/Compatibility

During transmissions, your SAMCOM radio generates RF energy that can possibly cause inference with other devices or systems. To avoid such interference. Turn off the radio in area where signs are posted to do so. DO NOT operate the transmitter in areas that are sensitive to electromagnetic radiation such as hospitals, aircraft, and blasting sites.

Acoustic Safety

Exposure to loud noises from any source for extended periods of time may temporarily or permanently affect your hearing. The louder the volume of the radio, the sooner your hearing will be affected. Hearing damage from loud noise is sometimes undetectable at first, and can have a cumulative effect.

To protect your hearing, follow these precautions:

● Use the lowest volume necessary to do your job.
● Turn up the volume only if you are in noisy surroundings.
● Turn down the volume before putting on a headset or headphones.
● Limit the amount of time you use a headset or headphones at high volume.
● When using the radio without a headset or headphones, do not place the speaker of the radio directly against your ear.