BUNN®

AXIOM® SERIES

PROGRAMMING MANUAL

BUNN-O-MATIC CORPORATION
POST OFFICE BOX 3227
SPRINGFIELD, ILLINOIS 62708-3227
PHONE: (217) 529-6601 FAX: (217) 529-6644

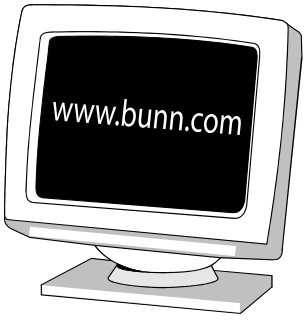

41154.0000C 05/12 ©2008 Bunn-O-Matic Corporation

BUNN-O-MATIC COMMERCIAL PRODUCT WARRANTY

Bunn-O-Matic Corp. ("BUNN") warrants equipment manufactured by it as follows:

1) Airpots, thermal carafes, decanters, GPR servers, iced tea/coffee dispensers, MCP/MCA pod brewers thermal servers and Thermofresh servers (mechanical and digital)- 1 year parts and 1 year labor.

2) All other equipment - 2 years parts and 1 year labor plus added warranties as specified below:

   a) Electronic circuit and/or control boards - parts and labor for 3 years.

   b) Compressors on refrigeration equipment - 5 years parts and 1 year labor.

   c) Grinding burrs on coffee grinding equipment to grind coffee to meet original factory screen sieve analysis - parts and labor for 4 years or 40,000 pounds of coffee, whichever comes first.

These warranty periods run from the date of installation BUNN warrants that the equipment manufactured by it will be commercially free of defects in material and workmanship existing at the time of manufacture and appearing within the applicable warranty period. This warranty does not apply to any equipment, component or part that was not manufactured by BUNN or that, in BUNN's judgment, has been affected by misuse, neglect, alteration, improper installation or operation, improper maintenance or repair, non periodic cleaning and descaling, equipment failures related to poor water quality, damage or casualty. In addition, the warranty does not apply to replacement of items subject to normal use including but not limited to user replaceable parts such as seals and gaskets. This warranty is conditioned on the Buyer 1) giving BUNN prompt notice of any claim to be made under this warranty by telephone at (217) 529-6601 or by writing to Post Office Box 3227, Springfield, Illinois 62708-3227; 2) if requested by BUNN, shipping the defective equipment prepaid to an authorized BUNN service location; and 3) receiving prior authorization from BUNN that the defective equipment is under warranty.

THE FOREGOING WARRANTY IS EXCLUSIVE AND IS IN LIEU OF ANY OTHER WARRANTY, WRITTEN OR ORAL, EXPRESS OR IMPLIED, INCLUDING, BUT NOT LIMITED TO, ANY IMPLIED WARRANTY OF EITHER MERCHANTABILITY OR FITNESS FOR A PARTICULAR PURPOSE. The agents, dealers or employees of BUNN are not authorized to make modifications to this warranty or to make additional warranties that are binding on BUNN. Accordingly, statements by such individuals, whether oral or written, do not constitute warranties and should not be relied upon.

If BUNN determines in its sole discretion that the equipment does not conform to the warranty, BUNN, at its exclusive option while the equipment is under warranty, shall either 1) provide at no charge replacement parts and/or labor (during the applicable parts and labor warranty periods specified above) to repair the defective components, provided that this repair is done by a BUNN Authorized Service Representative; or 2) shall replace the equipment or refund the purchase price for the equipment.

THE BUYER'S REMEDY AGAINST BUNN FOR THE BREACH OF ANY OBLIGATION ARISING OUT OF THE SALE OF THIS EQUIPMENT, WHETHER DERIVED FROM WARRANTY OR OTHERWISE, SHALL BE LIMITED, AT BUNN'S SOLE OPTION AS SPECIFIED HEREIN, TO REPAIR, REPLACEMENT OR REFUND.

In no event shall BUNN be liable for any other damage or loss, including, but not limited to, lost profits, lost sales, loss of use of equipment, claims of Buyer's customers, cost of capital, cost of down time, cost of substitute equipment, facilities or services, or any other special, incidental or consequential damages.

392, AutoPOD, AXIOM, BrewLOGIC, BrewMETER, Brew Better Not Bitter, BrewWISE, BrewWIZARD, BUNN Espress, BUNN Family Gourmet, BUNN Gourmet, BUNN Pour-O-Matic, BUNN, BUNN with the stylized red line, BUNNlink, Bunn-OMatic, Bunn-O-Matic, BUNNserve, BUNNSERVE with the stylized wrench design, Cool Froth, DBC, Dr. Brew stylized Dr. design, Dual, Easy Pour, EasyClear, EasyGard, FlavorGard, Gourmet Ice, Gourmet Juice, High Intensity, iMIX, Infusion Series, Intellisteam, My Café, Phase Brew, PowerLogic, Quality Beverage Equipment Worldwide, Respect Earth, Respect Earth with the stylized leaf and coffee cherry design, Safety-Fresh, savemycoffee.com, Scale-Pro, Silver Series, Single, Smart Funnel, Smart Hopper, SmartWAVE, Soft Heat, SplashGard, The Mark of Quality in Beverage Equipment Worldwide, ThermoFresh, Titan, trifecta, Velocity Brew, A Partner You Can Count On, Air Brew, Air Infusion, Beverage Bar Creator, Beverage Profit Calculator, Brew better, not bitter., BUNNSource, Coffee At Its Best, Cyclonic Heating System, Daypart, Digital Brewer Control, Nothing Brews Like a BUNN, Pouring Profits, Signature Series, Tea At Its Best, The Horizontal Red Line, Ultra are either trademarks or registered trademarks of Bunn-O-Matic Corporation.

INTRODUCTION

This equipment will brew a ½ gallon batch of coffee into an awaiting decanter. The brewer may have a hot water faucet for allied beverage use. It is only for indoor use on a sturdy counter or shelf.

CONTENTS

Adjustments & Programming 4
Troubleshooting..... 14

ADJUSTMENTS & PROGRAMMING

PROGRAMMING THE BREWER

The programming of the brewer is divided into two levels. Brewing adjustments are in "BrewWizard". Service functions are accessed in Level 2.

The following function screens are in order of appearance. Each screen will have instructions on how to access, and the procedures to program the various functions of the brewer.

IMPORTANT PROGRAMMING NOTES
- READ CAREFULLY -

To exit the programming mode at any time, press and release "ENABLE BREW ON/OFF" switch located on the front switch panel. The display will return to the MAIN SCREEN.

If none of the five programming switches are pressed within one minute during the setup of the brewer, the programming of the function screen that is being set will be exited and the display will return to the MAIN SCREEN.

Always remember to place an empty server and funnel under the sprayhead when operating the brewer during the set-up of PULSE BREW, CALIBRATE FLOW and testing the brew valve in SERVICE TOOLS/TEST OUTPUTS.

PROGRAM FUNCTIONS - BREW WIZARD

MAIN SCREEN

READY TO BREW
WATER TEMP: 200°

Digital Brewer Control™

PROGRAMMING LOCKOUT SWITCH
(Mounted on main control board)

This switch can be set to prevent access to the programming settings of the brewer. Once all the correct brew settings are programmed, the operator can set the switch to the "ON" position to prohibit anyone from changing the settings. With the switch in the "ON" position, the programming menus can still be accessed to view the current settings. However, no changes will be saved.

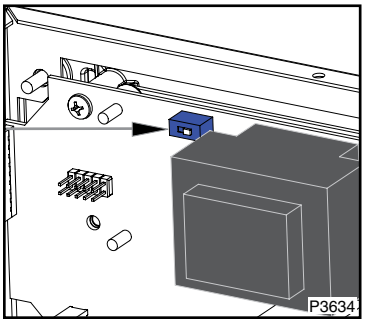

Disconnect brewer from power source before removing any panel!

BREW LOCKOUT

This function allows the operator to prevent or allow brewing if the water temperature is less than the set READY temperature.

To access this function screen press and hold the right hidden switch. Release when the display reads: "BREW WIZARD" it will then read:

BREW LOCKOUT?
NO DONE YES

Digital Brewer Control™

Press here for **NO** | Press here for **DONE** | Press here for **YES**

The YES or NO should be flashing. Select YES to prevent brewing if the water temperature is below the set READY temperature. Select NO to permit brewing at any water temperature. When finished, press and release DONE. This will step to the next function screen. To return to the MAIN SCREEN at any time, press and release "ENABLE BREW ON/OFF".

ADJUSTMENTS & OPTIONAL SETTINGS (CONT.)

PROGRAMMING FUNCTIONS - BrewWIZARD (cont.)

The functions in the "BrewWIZARD" allow the operator to adjust brew settings and other features.

BREW OZ:

This function allows the operator to adjust the brew volume.

Procedure:

1. Press and hold the right hidden switch until the display reads "BrewWIZARD" and release.
2. The display will then read: "BREW OZ: xx.x"
3. Press (-) "**Digital**" to decrease the amount, or (+) "**Control**" to increase.
   Range: (10 to 192 oz., in .5 oz. increments) or (.30 to 6.60 Liters, in .01 increments)
4. When finished, press "DONE". This will take you to the next screen. Press and release the right hidden switch to continue to the next screen, or press and release the "ENABLE BREW ON/OFF" switch to return to the main screen.

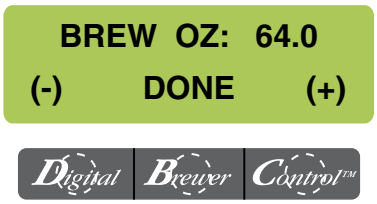

BREW METER:

This function allows the operator to adjust the brew strength/extraction time. Setting #1 will produce a **non-pulsed** brew cycle and the highest (#14) will give you the longest time (utilizing pulse brew).

Procedure:

1. Press and hold the right hidden switch until the display reads "BrewWIZARD" and release.
2. The display will then read: "BREW OZ: xx.x"
3. Press and release the right hidden switch until the display reads "BREW METER"
4. Press (-) to decrease the amount, or (+) to increase. (Range: 1 - 14)
5. When finished, press and release the right hidden switch. This will take you to the next screen, or press and release the "ENABLE BREW ON/OFF" switch to return to the main screen.

Weakest (Shortest)

Strongest (Longest)

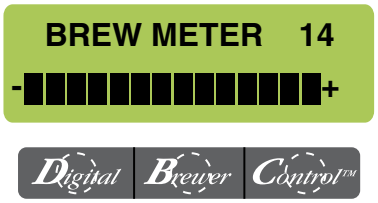

NOTE: This will overwrite settings in "PULSE BREW"

ENABLE ADS

This function allows the operator to choose whether or not to display an advertising message. An ad can be saved to the brewer by writing the ad using the programming commands. This message will be displayed when the brewer is idle.

Procedure to Enable/Disable Ads:

1. Press and hold the right hidden switch until the display reads "BrewWIZARD" then release. Press and release the right hidden switch until the display reads "ENABLE ADS ?". The "YES" or "NO" will be flashing to indicate the current selection.
2. Press and release the "NO" switch to disable this function, or:
3. Press and release the "YES" switch to enable this function.
4. When finished, press and release "DONE" to save the new setting and advance to the next function screen.
5. If "NO" was selected, the display should now read "ENTER SERVICE #?". To exit programming and return to the MAIN SCREEN, press and release the "ENABLE BREW ON/OFF" switch.
6. If "YES" was selected, the display should now read "NEW AD?". This screen allows you to write a new ad.
7. The display should now read "2 LINES 16 CHARS AVAILABLE", and then "SCROL THRU ALPHA, NEXT -> NEXT LETTER", and then "WRITE TOP LINE?". The ad can be up to 32 characters long, 16 per line. The ad will be written in two steps, first the top line, then the bottom line.
9. To write the top line of a new ad, press and release "YES". To skip the top line and only write a bottom line, press and release "NO" and proceed to step 13. To exit programming and return to the MAIN SCREEN, press and release the "ENABLE BREW ON/OFF" switch.
10. The display will now read "A" with a flashing cursor below it. Press and hold the "SCROLL" switch to scroll through the alphabet and available characters. When the desired character is shown on the display, press and release "NEXT" to move to the next character in the top line.
11. Repeat step 10 until the top line is complete.
12. Press and release "DONE". The display should now read "WRITE BTM LINE?".
13. To write the bottom line of the new ad, press and release "YES".
14. To skip the bottom line, press and release "NO".
    a. If neither a top nor bottom line was written, the display should now read "ENTER SERVICE #?".
    b. If only a top line was written, the ad will be displayed followed by "SAVE?" Proceed to step 18.
15. The display will now read A with a flashing cursor below it. Press and hold the "SCROLL" switch to scroll through the alphabet and available characters. When the desired character is shown on the display, press and release "NEXT" to move to the next character in the bottom line.
16. Repeat step 15 until the bottom line is complete.
17. Press and release "DONE". The display will now show the written ad, and then "SAVE?"
18. To cancel saving the ad, press and release "NO". The display should now read "ADVERTISEMENT NOT SAVED!" and then will return to the "NEW AD" screen. To exit programming and return to the MAIN SCREEN, press and release the "ENABLE BREW ON/OFF" switch.
19. To correct or edit the ad, press and release "EDIT". The display should now read "WRITE TOP LINE?" Repeat steps 10 though 17.
20. To save the ad as it is shown, press and release "YES". The display should now read "ADVERTISEMENT SETUP COMPLETE", and then "ENTER SERVICE #?". To exit programming and return to the MAIN SCREEN, press and release the "ENABLE BREW ON/OFF" switch.

ADJUSTMENTS & OPTIONAL SETTINGS (CONT.)

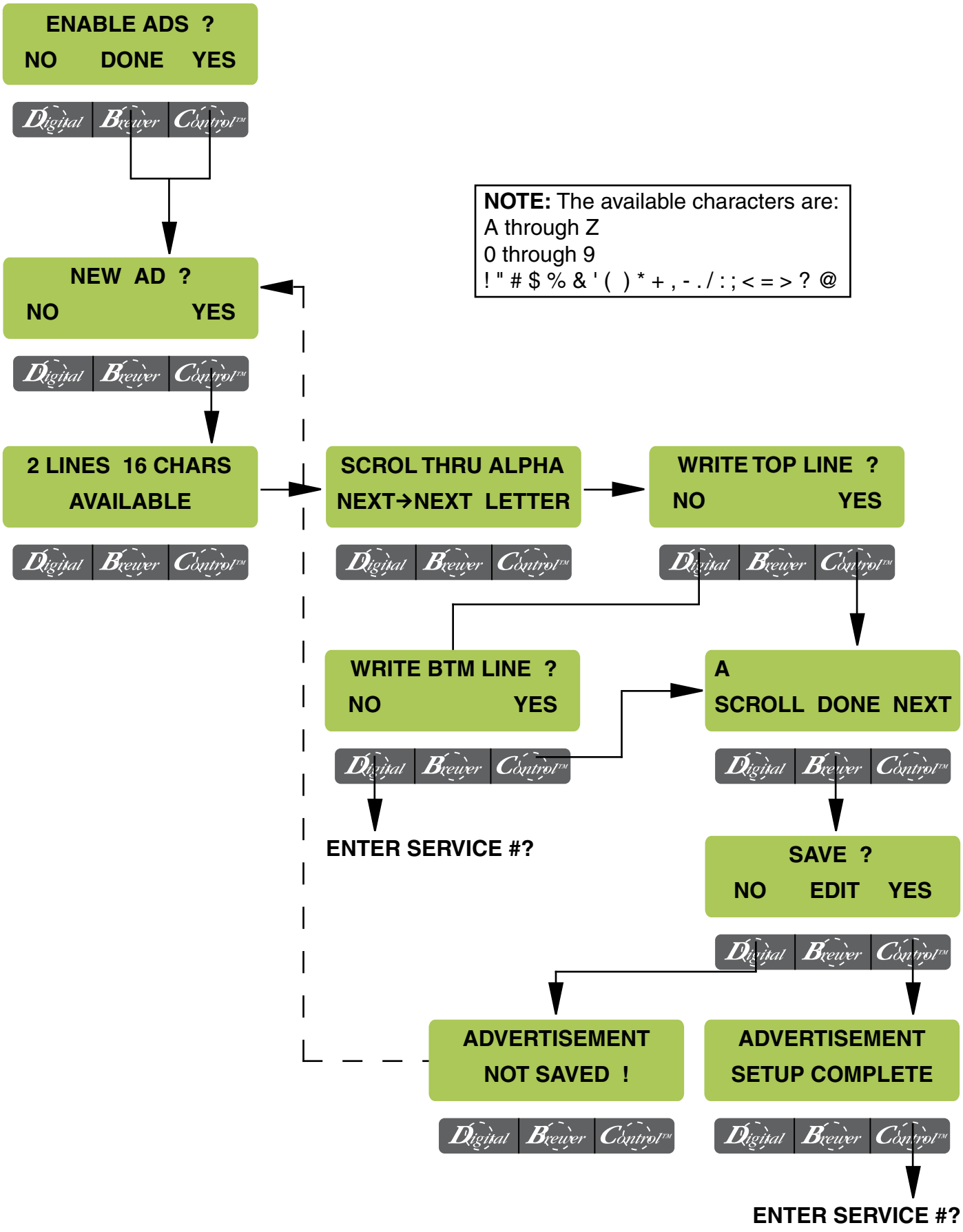

NOTE: The available characters are:
A through Z
0 through 9
! " # $ % & ' ( ) * + , - . / : ; < = > ? @

SERVICE NUMBER

This function allows the operator to enter in the telephone number to call if service is needed. The service number will be displayed anytime there is a fault message displayed.

Procedure to enter the service number:

1. Press and hold the right hidden switch until the display reads "BrewWIZARD" then release. Press and release the right hidden switch until the display reads: "ENTER SERVICE #?"
2. Press and release "YES" switch. The display will now read "SCROL THRU #'S NEXT - > NEXT NUMBER", followed by "SCROLL DONE NEXT".
3. Press the "SCROLL" switch to increment the number. When the desired number is shown, press and release the "NEXT" switch to move to the next digit in the phone number.
4. Repeat Step 3 until the entire number is entered.
5. Press and release the "DONE" switch. The display will now read "EXITING BrewWIZARD" and then "ENTER PASSWORD".

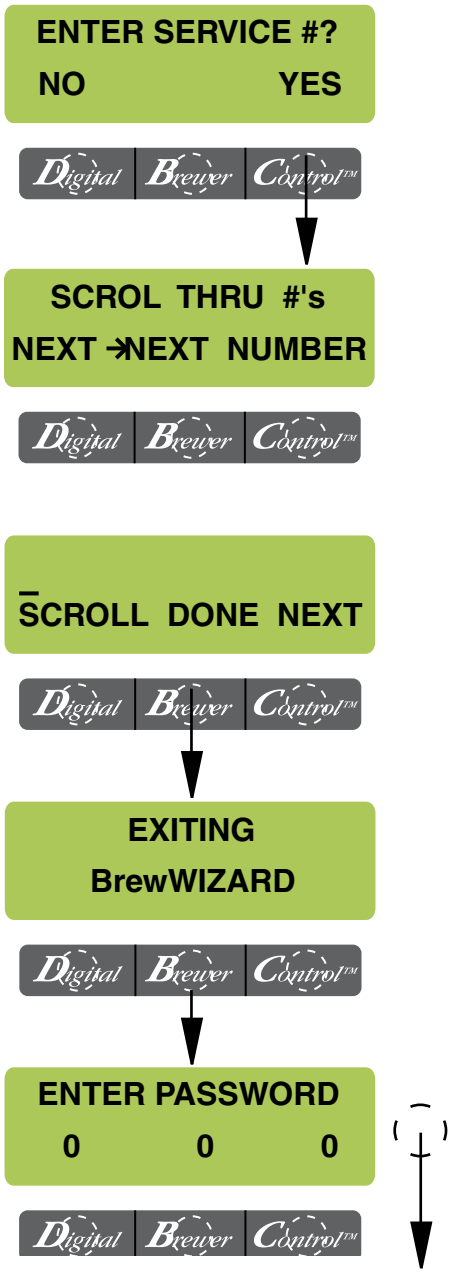

PROGRAMMING FUNCTIONS - LEVEL 2

ENTER PASSWORD

This function allows the operator to enter a 3 digit number to access LEVEL 2. If no number has been pre programmed (0 0 0), then access is allowed by pressing and releasing the right hidden switch.

Procedure to enter the "PASSWORD":

1. Press and release the "**Digital**" switch to increment the first digit.
2. Press and release the "**Brewer**" switch to increment the second digit.
3. Press and release the "**Control**" switch to increment the third digit.
4. Press and release the right hidden switch. If the correct password was entered, the display will now read "SET PASSWORD". If the wrong password was entered, the unit will revert back to the main screen.

PROGRAMMING FUNCTIONS - LEVEL 2 (cont.)

NOTE: Access to the remaining functions in LEVEL 2 is intended for trained service personnel only. More in depth information can be found in the **Axiom Service Manual** 39132.0000

SET PASSWORD
0 0 0

Digital Brewer Control™

Any 3 digit number may be programmed to prevent unauthorized access of LEVEL 2. **BE CAREFUL TO USE A CODE YOU WILL REMEMBER!**

SET LANGUAGE
NO YES

Digital Brewer Control™

Choose between English or Spanish. After selecting "YES", press either (+) or (-) to select, then choose "YES" again when asked, "ARE YOU SURE?"

UNITS
METRIC DONE ENG

Digital Brewer Control™

Choose between English or Metric units. Display will read: "CHANGING UNITS WILL CAUSE" "ALL SETUP INFO TO BE LOST" "ARE YOU SURE?" "NO YES". **NOTE:** If the brewer is set for Metric Units, displays will be different. (ex: Brew oz will become Brew Liters, ° F will be ° C).

SET TEMP: 200°
(-) DONE (+)

Digital Brewer Control™

Adjusts brew tank temperature.
RANGE: (185 to 205° F) or (85 to 96° C)

SET READY: 195°
(-) DONE (+)

Digital Brewer Control™

This function sets the minimum temperature allowable to start a brew cycle. Range: (2° to 20° F) or (2° to 10° C) below the set temperature. The water must be at the "READY" temperature or higher for the display to indicate "READY TO BREW".

ENTER ASSET # ?
NO YES

Digital Brewer Control™

This function allows the you to enter in an optional asset number. This can be useful for tracking the usage or service of an individual machine within a group.

ADJUSTMENTS & OPTIONAL SETTINGS (CONT.)

PROGRAMMING FUNCTIONS - LEVEL 2 (cont.)

Note

"EASY PULSE BREW" times:
Min: Base brew time + 40 seconds
Max: Base brew time + 3:00 minutes

SET PULSE BREW ?
NO YES

Digital Brewer Control™

This function allows the sprayhead to “pulse” on and off during a brew cycle. These times can be set two different ways. The first is by setting the total brew time in the "EASY PULSE BREW" screen. The other option allows the actual times to be entered in the "MANUAL PULSE BREW" screen.
NOTE: This will overwrite settings in "BREW METER".

DRIP TIME 0:30
(-) DONE (+)

Digital Brewer Control™

Adjusts the DRIP TIME (time from end of sprayhead flow to when liquid stops dripping from the funnel). When the brew cycle is complete, the display will show "DRIPPING" and will countdown the time until the funnel empties.
RANGE: "OFF" or 0:05 to 4:00 minutes

ENABLE CLEAN
NO DONE YES

Digital Brewer Control™

Set the time before a cleaning alert will be displayed.
RANGE: 1 to 30 days

Enabl EnergySavr
NO DONE YES

Digital Brewer Control™

Enables the mode function and sets the idle time. Then choose to have the tank heater(s) turn off, or reduce the tank temp to (140° F) or (60° C) once the set idle time has expired.
Range: 0.5 to 24.0 hrs

EnableFreshTimer
NO DONE YES

Digital Brewer Control™

Enables the "FRESHNESS ALERT!" message and sets the expiration time. The expiration time is the amount of time the product is allowed to sit in the server before an alert message is displayed.
Range: 0.5 to 4.0 hrs

ENABL WARMER OFF
NO DONE YES

Digital Brewer Control™

Sets the amount of time a warmer will remain on after being turned on. Each warmer has an independent timer and is affected by its corresponding switch. NOTE: The lower "Brew" warmer timer is restarted when brew switch is pressed. Range: 15mins to 6.0 hrs in 15 min increments.

0 REFILL 155
(-) DONE (+)

Digital Brewer Control™

Adjusts the sensitivity of the refill circuit. Water in different geographical locations can have different conductivities. Make sure the water in the tank is touching the refill probe. **NOTE:** Always make sure that the # on the right is larger than the # on the left when water is contacting the tank refill probe.

PROGRAMMING FUNCTIONS - LEVEL 2 (cont.)

ENABLE BrewLOGIC
NO DONE YES

The BrewLogic system allows the brewer to be calibrated to high mineral locations and compensate as deposits build up internally. Press YES, then press DONE. Follow the prompts. **Pertains only to software version 1.07 & above!**

Digital Brewer Control™

Go to SPRAY OZ/M:

PLACE BREWER IN
FINAL LOCATION

Select a sturdy, level location.
Brewer must not be bumped during calibration!

Digital Brewer Control™

CALIBRATE NOW?
NO YES

Select YES for calibration. Selecting NO warns of accuracy risk

Digital Brewer Control™

ACCURACY RISK!!!
OK CAL.

Select CAL. to start calibration procedure. Selecting OK will skip to level probe calibration screen.

Digital Brewer Control™

Go to CAL LP1-LP2

TOO HOT-WILL
COOL TANK NOW

Automatically checks to see if tank temperature is between 130°-170°F (54°-76°C)

Digital Brewer Control™

PRESS BREW WHEN
CONTAINER READY

Verify brew funnel and decanter/airpot/thermal server (depending on which model you have) are in place. Then press the "BREW START" button.

Digital Brewer Control™

COOLING TANK
PLEASE WAIT

Message will be displayed while dispense is being performed. Tank heaters are turned off and the unit will dispense for ~1 minute to cool tank temperature.

Digital Brewer Control™

(CONT.)

PROGRAMMING FUNCTIONS - LEVEL 2 (cont.)

CONTAINER READY?
QUIT YES

Digital Brewer Control™
Go to CAL LP1-LP2

When the dispensing finishes, empty the decanter/server and place back under brew funnel.
Select YES for calibration. Selecting QUIT will skip to level probe calibration screen.

CALIBRATE SPRAY
PRESS BREW START

Digital Brewer Control™

Press the "BREW START" button. Will perform the sprayhead flow-rate calibration as well as the level probe calibration.

Brewer must not be bumped during calibration!

WaitingTilCycle 4
CYCLE x COMPLETE

Digital Brewer Control™

Machine will dispense volume between upper probe and lower probe 4 times. (The total dispense will be about half of a decanter)
Brewer must not be bumped during calibration!

ENTER OZ XX.X
(-) DONE (+)

Digital Brewer Control™

Enter volume dispensed into container.
Use the (+) to increase the numeric value or (-) to decrease.

SPRAY OZ/M: XX.X
LP1-LP2 OZ XX.X

Digital Brewer Control™

Displays sprayhead flow-rate and volume of water between the upper and lower level probes.

CALIBRATE LP1-LP2
NO YES

Digital Brewer Control™
Go to BREW COUNTERS
Go to CAL LP1-LP2

Allows you to perform calibration again if you want to verify results.

PROGRAMMING FUNCTIONS - LEVEL 2 (cont.)

SPRAY OZ/M: 25.0
(-) DONE (+)

Digital Brewer Control™

View or enter the actual flow rate coming out of the sprayhead. This is used to tell the internal controller how fast the water is flowing. Use the "CALIBRATE FLOW" screen to obtain the most current flow rate.
Range: (3.0 to 75.0 oz) or (100 to 2200ml)

CALIBRATE FLOW ?
NO YES

Digital Brewer Control™

This function provides a 60 second test mode to capture water from the sprayhead. This measurement will then give you the numbers to enter into the "SPRAY OZ/M: xx" screen above.**NOTE:** Should be performed after deliming and/or changing sprayhead. **(Will not display when "BrewLogic" is enabled)**

BREW COUNTERS ?
NO YES

Digital Brewer Control™

Tracks the total number of brew cycles completed. There is one reset-able counter, and one life counter that is not reset-able

SERVICE TOOLS ?
NO YES

Digital Brewer Control™

Allows the testing of individual components and the ability to check the membrane switches for proper function. (Diagnostic tool for troubleshooting purposes only)

FACTORY DEFAULTS
NO YES

Digital Brewer Control™

Reset ALL of the previously entered brew settings, ad message, calibrations, etc. Factory-set default values will replace ALL previous settings.
NOTE: Items not affected; Service #, Password, Language, Units, Asset #, Counters and Serial Number.

INITIAL FACTORY DEFAULT VALUES

Brew Lockout	NO	
BREW	64 OZ	(2.0L)
BREW METER	1	
ENABLE ADS	NO	
PASSWORD	0	
Language	English	
Units	English	
SET TEMP	200° F	(93° C)
SET READY	195° F	(90° C)
ENTER ASSET # -		0
PULSE BREW -		DISABLED
DRIP TIME -		0:30
ENABLE CLEAN -		NO

ENABLE ENERGY SAVER -	NO
ENABLE FRESH TIMER -	NO
ENABLE WARMER OFF -	NO
REFILL -	155
SPRAY	25.0 oz/M (739ml/M)

Software Version 1.07 & above

BrewLogic	OFF

TROUBLESHOOTING

PROBLEM	PROBABLE CAUSE	REMEDY
Temperature Too Low	1. Water temperature in the tank does not meet the ready temperature.	A) Wait for the brewer to heat to the proper temperature. B) Disable the BREW LOCK-OUT function. Refer to programming section for procedure.
Heating Time Too Long	1. Tank Heater failure.	Service required
	2. Control Board/Thermistor failure	Service required
Fill Time Too Long	1. Water shut off to brewer	Check water supply shut-off
	2. Supply line too small or obstructed	Replace or repair as needed
	3. Inlet Solenoid failure	Service Required
	4. Control Board Failure	Service Required
	5. ON/OFF switch is OFF	Turn switch ON
Temp Sensor Out Of Range, Check For Bad Connections	1. Temperature Sensor Probe wire(s) broken or not making connection	Service required
Temp Sensor Out Of Range, Check Wire For Shorts	1. Temperature Sensor Probe wire(s) shorted to housing or to each other.	Service required
Equipment will not operate	1. No power	Verify power cord is plugged into outlet.
	2. Incorrect voltage	Service required
Water flows into tank continuously with power removed from brewer.	1. Refill valve	Service required

TROUBLESHOOTING (cont.)

PROBLEM	PROBABLE CAUSE	REMEDY
Brew cycle will not start	1. No water	Check plumbing and shut-off valves
	2. Water temperature in the tank does not meet the ready temperature.	A) Wait for the brewer to heat to the proper temperature B) Disable the BREW LOCK-OUT function. Refer to programming section for procedure.
	3. "ENABLE BREW ON/OFF" switch not on.	Turn on
	4. Brew switch	Service required
	5. Brew valve	Service required
	6. Control Board	Service required
Spitting or unusual steaming from sprayhead or air vent.	1. Lime buildup	Refer to cleaning section.
	2. Temperature probe	Service required
	3. Control Board	Service required
Inconsistent beverage level	1. Lime buildup	Refer to cleaning section.
	2. Brew valve	Service required
Dripping from sprayhead.	1. Brew valve	Service required
Water overflows filter.	1. Type of paper filter	BUNN paper filters should be used for proper extraction
	2. No sprayhead	Replace sprayhead
Beverage overflows decanter	1. Beverage left in decanter from previous brew	The brew cycle should be started only with an empty decanter under the funnel.
	2. Brew volume adjustment	Adjust the brew volume, calibrate sprayhead as required to achieve the desired volume for each brew cycle.

TROUBLESHOOTING (cont.)

PROBLEM	PROBABLE CAUSE	REMEDY
Weak beverage.	1. Type of paper filter	BUNN paper filters should be used for proper extraction
	2. Coffee	For coffee, a sufficient quantity of fresh drip or regular grind should be used for proper extraction.
	3. Sprayhead	A BUNN sprayhead should be used to properly wet the bed of ground coffee in the funnel
	4. Funnel Loading	The BUNN paper filter should be centered in the funnel and the bed of grounds leveled by gently shaking.
	5. Water temperature	Place empty funnel on top of an empty server (not in the funnel rails). **NOTE:** Do not remove sprayhead! **WARNING:** HOT WATER Press brew. Check water temperature immediately below the sprayhead with a thermometer. **Recommended** reading should be at least 195°F (90°C).
	6. Incorrect recipe	Consider adjusting brew volume, and/or BREW METER.

TROUBLESHOOTING (cont.)

PROBLEM	PROBABLE CAUSE	REMEDY
Brewer is making unusual noises.	1. Solenoids vibrating	Service required.
	2. Plumbing lines	Plumbing lines should not be resting on the countertop.
	3. Water supply	The brewer must be connected to a cold water line. Water pressure to the brewer must not be higher than 90 psi (620 kPa). Install a regulator if necessary to lower the working pressure to approximately 50 psi (345 kPa).
	4. Tank heaters	Service required.
"CHECK SPRAYHEAD FOR LIME" - "CHECK FITTINGS FOR LIME"	1. Lime buildup in sprayhead	Refer to cleaning section.
	2. Lime buildup in brew valve	Refer to cleaning section.
	3. Lime buildup in brew tank	Service required.
"WARNING INACCURATE FLOW" - "TOO MUCH LIME PLEASE REPAIR"	1. Lime buildup in sprayhead	Refer to cleaning section.
	2. Lime buildup in brew valve	Refer to cleaning section.
	3. Lime buildup in brew tank	Service required.
"WARNING VERY LOW FLOW" - "PLEASE REPAIR"	1. Lime buildup in sprayhead	Refer to cleaning section.
	2. Lime buildup in brew valve	Refer to cleaning section.
	3. Lime buildup in brew tank	Service required.