DREO | Pedestal Air Circulator Fan
PolyFan 419

# USER MANUAL

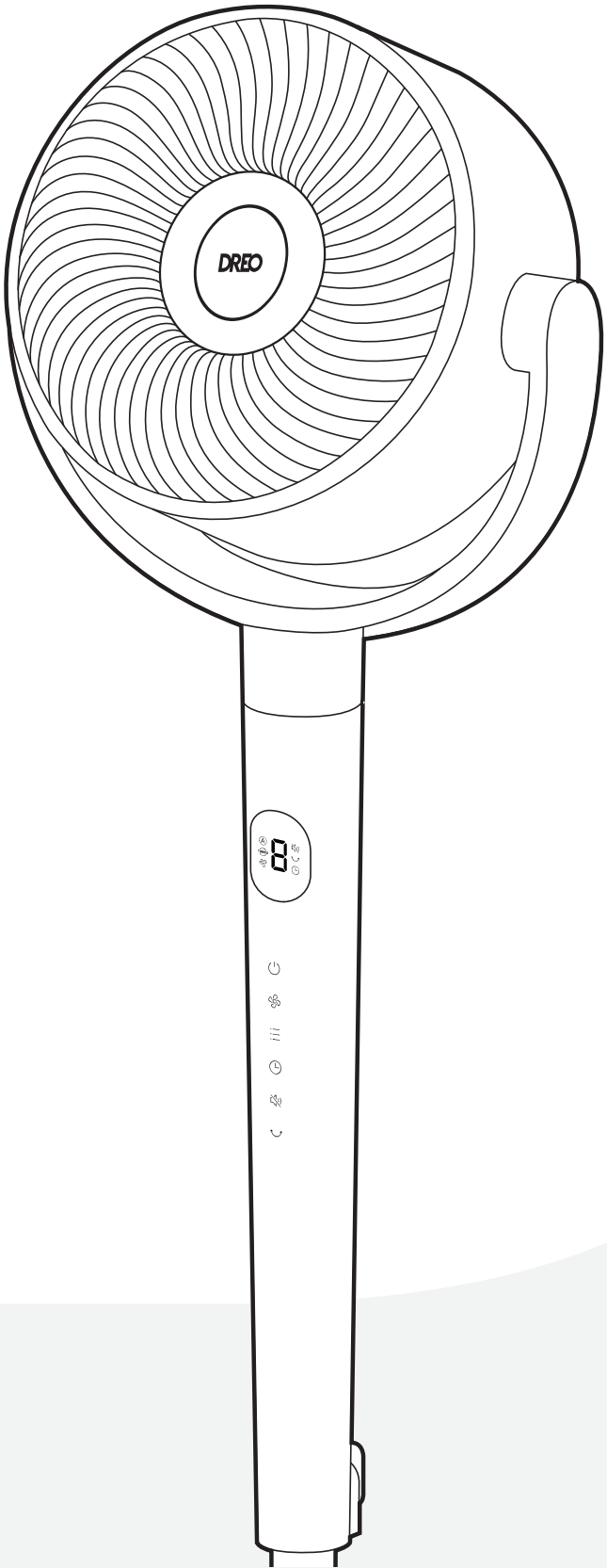

# Thanks for Choosing DREO!

Your support means the world to us. We hope you enjoy our product as much as we did creating it.

# CONTENTS


01
IMPORTANT SAFETY INSTRUCTIONS
1-2

02
ASSEMBLING YOUR PEDESTAL AIR CIRCULATOR
3-5

03
KNOWING YOUR PEDESTAL AIR CIRCULATOR
6-7

04
USING YOUR PEDESTAL AIR CIRCULATOR
8-10

05
CLEANING AND MAINTENANCE
11-13

06
TROUBLESHOOTING
14

07
DREO CUSTOMER CARE
15-16

# IMPORTANT SAFETY INSTRUCTIONS

# 01

READ ALL CAUTIONARY MARKINGS ON THE APPLIANCE AND SAFETY INSTRUCTIONS IN THE USER MANUAL BEFORE

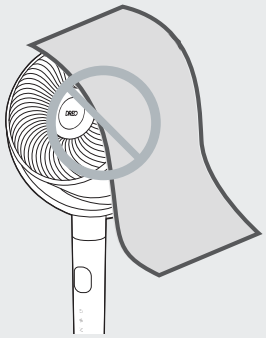

**Do not** cover the air inlet and outlet while in operation.



**Do not** use the air circulator near flammables and combustibles.

## General Safety

1. Children shall not play with the appliance. Cleaning and maintenance shall not be performed by children without supervision.
2. Use the appliance as described in the user manual only. Any other use not recommended in the user manual may cause fire, electrical shock, or personal injury.
3. This appliance can be used by children aged above 8 years and persons with reduced physical, sensory or mental capabilities or lack of experience and knowledge if they have been given supervision or instruction concerning use of this appliance in a safe way and understand the hazards involved.

## Operation Safety

1. Place the appliance on a flat, dry surface before use.
2. **Do not** immerse in water and any other liquids.
3. **Do not** use the appliance until the base is installed.
4. **Do not** insert your fingers, pencil and any other objects into the grilles under any circumstances.
5. **Do not** dismantle, repair, or modify. All servicing should be performed by qualified personnel.
6. **Do not** operate the unit close to the curtain. Do not hang foreign objects on the grille to prevent damaging the balance of the fan or rotational structure.
7. **Do not** operate the fan under overly humid, high-temperature, dusty environment or the place where acid or alkali is stored.
8. Fans should never blow directly on infants, the elderly, and patients for a long time.

## Electricity Safety

WARNING:

1. Make sure that the voltage of your electricity supply is the same as that indicated on the appliance.
2. Always unplug before cleaning or leaving the appliance unused for a long period of time. Keep your hands dry when plugging/unplugging.
3. Do not operate any air circulator with a damaged cord or plug. Discard air circulator or return to an authorized service facility for examination and/or repair.
4. Do not run cord under carpeting. Do not cover cord with throw rugs, runners,or similar coverings. Do not route cord under furniture or appliances. Arrange cord away from traffic area and where it will not be tripped over
5. **WARNING:** To reduce the risk of fire or electric shock, do not use this air circulator with any solid-state speed control device.
6. Use 24V/1.5A power adapter only. Turn off the appliance before plugging.
7. **WARNING:** To reduce the risk of fire, electric shock or injury to persons, do not use replacement parts that have not been recommended by the manufacturer (e.g. parts made at home using a 3D printer).
8. If the supply cord is damaged, it must be replaced by the manufacturer or its service agent or a similarly qualified person in order to avoid a hazard.

# FOR HOUSEHOLD USE ONLY READ AND SAVE THESE INSTRUCTIONS

## Gentle Reminder:



Check the appliance regularly and refer to TROUBLESHOOTING or contact our customer support if it shows any of the following signs:

- Power cord or plug is damaged.
- Loud noise, unusual smell or excessive heat.

## Specifications

| | |
|---|---|
| Model No.: | DWPF09 |
| Power Supply | 24V⎓1.5A |
| Rated Power | 36W |
| Power Adapter | **Input:** 120V~60Hz 1.0A **Output:** 24V ⎓ 1.5A |
| Battery Type | AAA |

# ASSEMBLING YOUR PEDESTAL AIR CIRCULATOR

# 02

## Assembly Instructions

When using the appliance for the first time, remove the wraps and attach the parts by following the steps below.

1

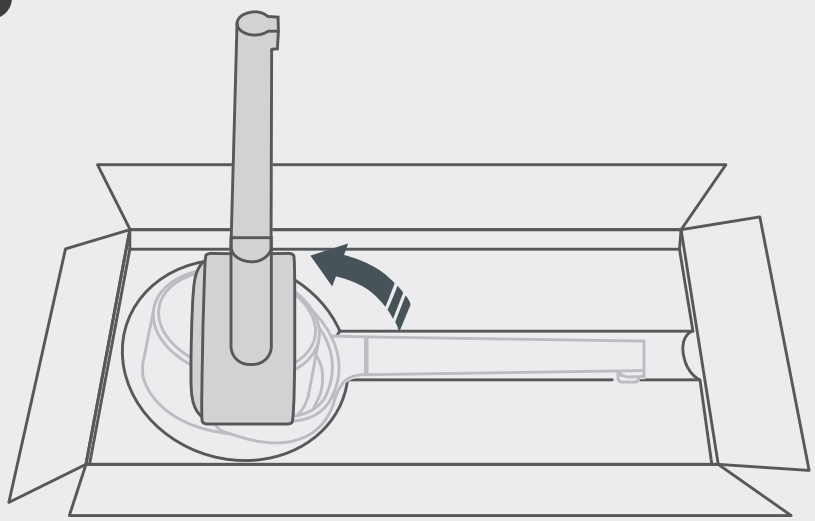

Turn the fan body upside down.

2



Install the short pedestal into the fan body column by rotating the pedestal until tightened.

3

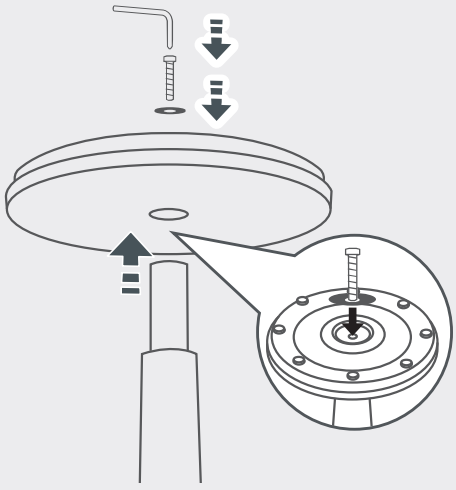

Push the column into the base, then thread the screw through the flat washer and use the included screwdriver to drive the screw into the bottom of the column.

4

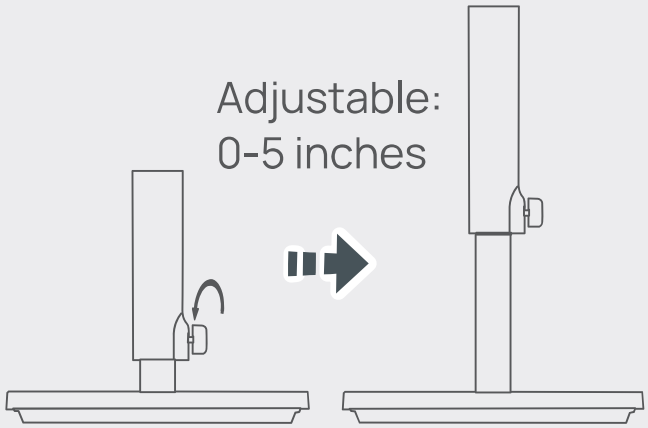


Hold the main body while rotating the Adjustment Collar counterclockwise to raise or lower the pedestal air circulator fan to the desired height.

5

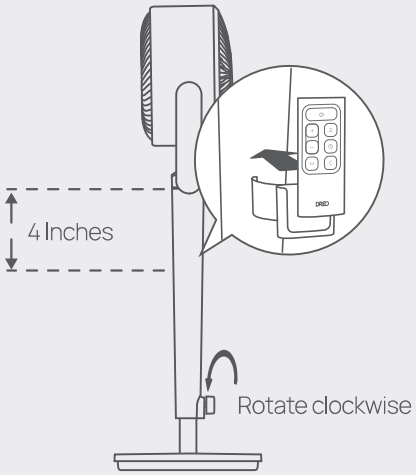


Tighten the adjustment collar and install the remote control holder

6

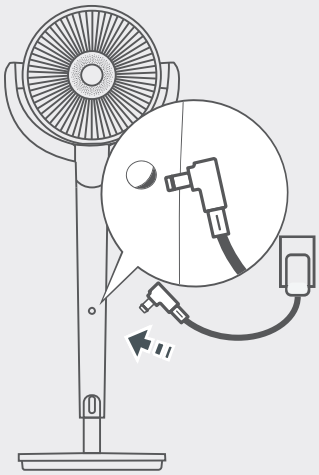

Plug the power adapter into the power (located at the back of the pedestal air circulator fan), and into the power outlet.

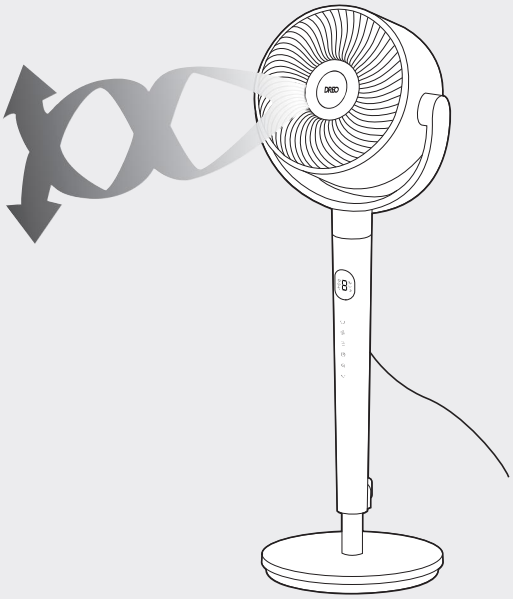

## CAUTION

Do not operate the pedestal air circulator fan if the base has not been installed. Please exercise caution and handle the base with care during installation.

# Package Contents

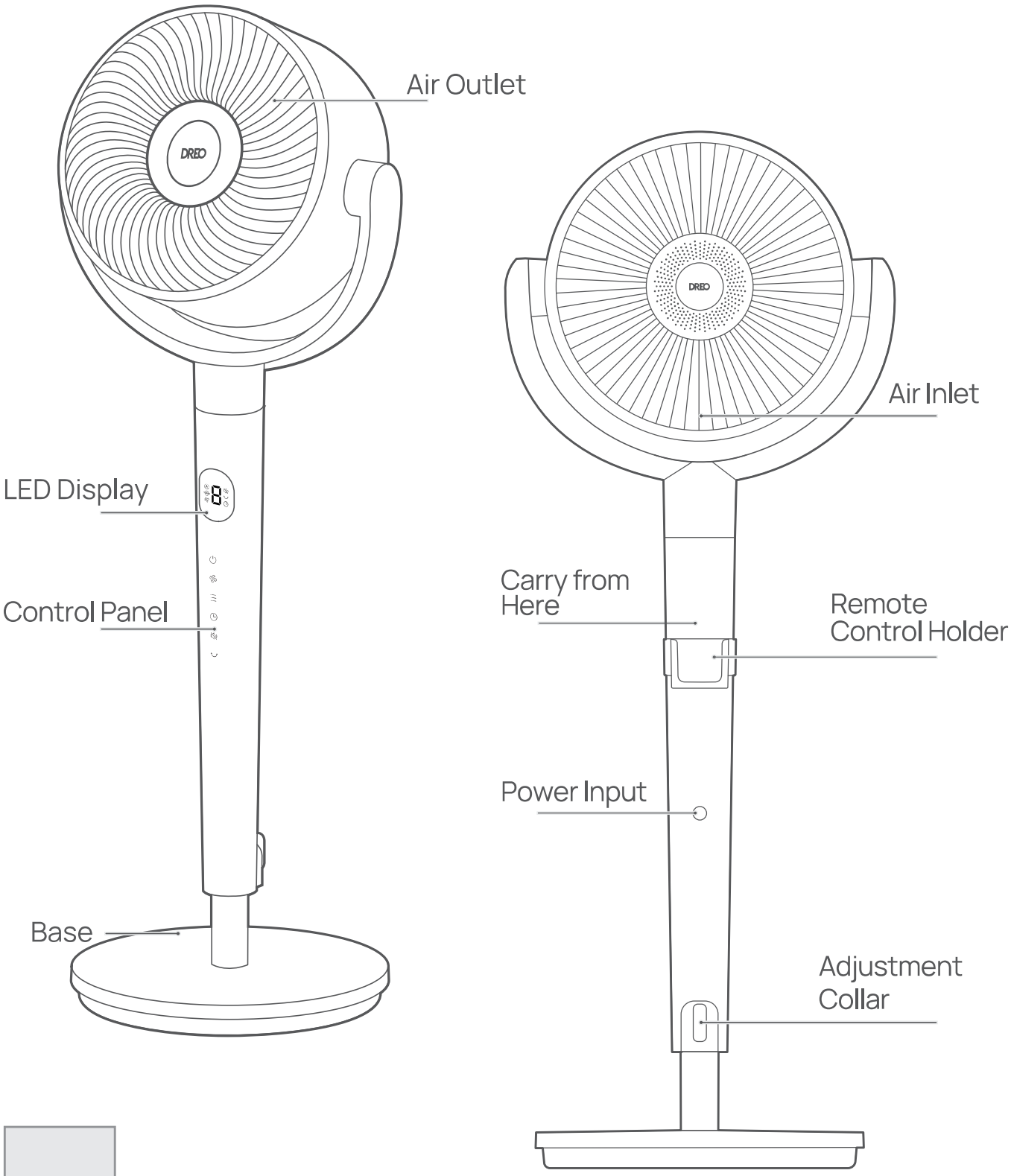


User Manual

Quick Start Guide



Remote Control (Battery Included)



Power Adapter



Remote Control Holder



Screw for Base

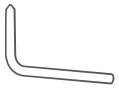

Screwdriver for Base



Flat Washer

# KNOWING YOUR PEDESTAL AIR CIRCULATOR

# 03

## Control Panel



**Power Button**
- Turn power on/off
- Long press 10 seconds to reset to factory settings



**Fan Speed Button**
- 1-9 Levels



**Working Mode Button**
- Switch between Normal/Auto/Turbo



**Timer Button**
- Select to set a timer (0-9h)



**Mute Button**
- Turn on/off the button sounds
- Long press 3s to activate/deactivate fan repositioning.



**Horizontal Oscillation Button**
- Sweep airflow horizontally (0°/30°/60°/90°/120°)

## LED Display

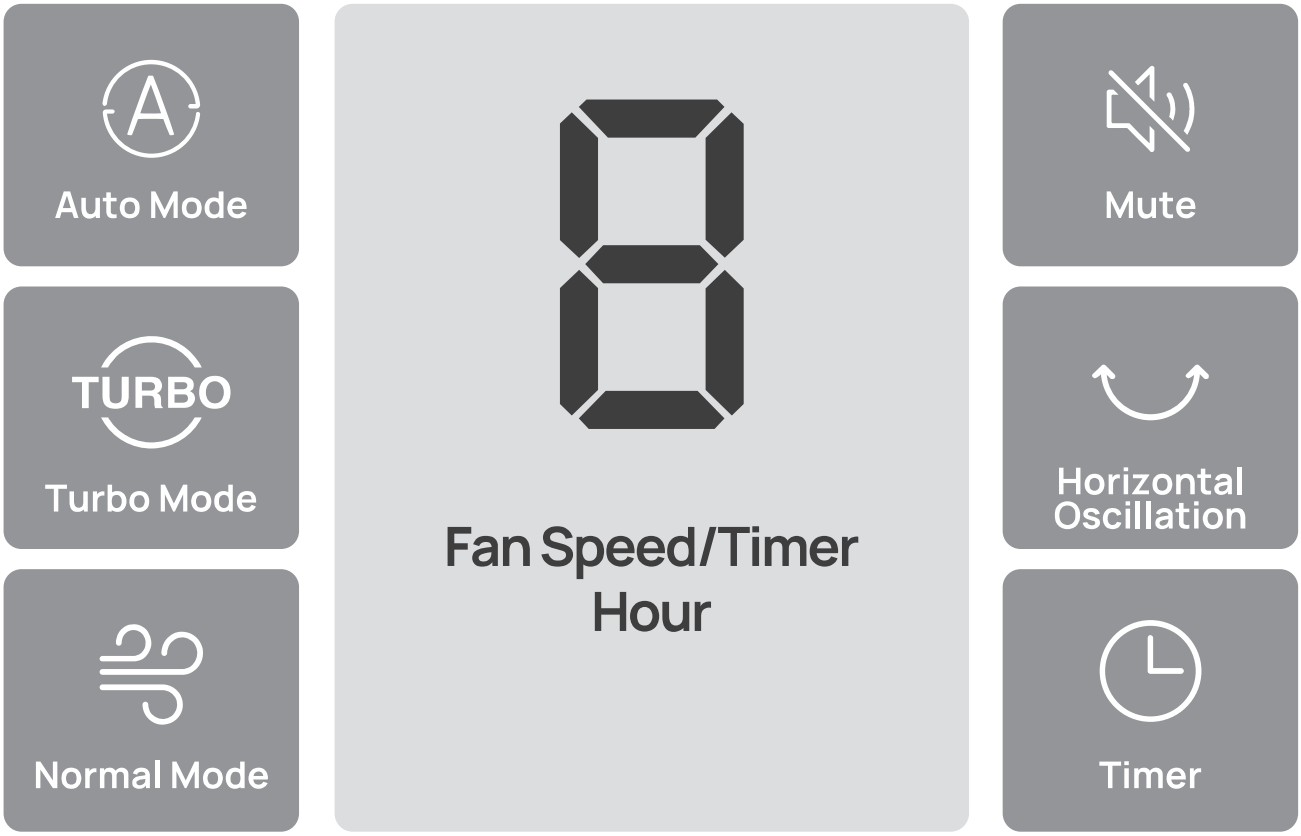
Auto Mode
Turbo Mode
Normal Mode
Fan Speed/Timer Hour
Mute
Horizontal Oscillation
Timer

# USING YOUR PEDESTAL AIR CIRCULATOR 04

## Getting the Most out of Your Pedestal Air Circulator Fan

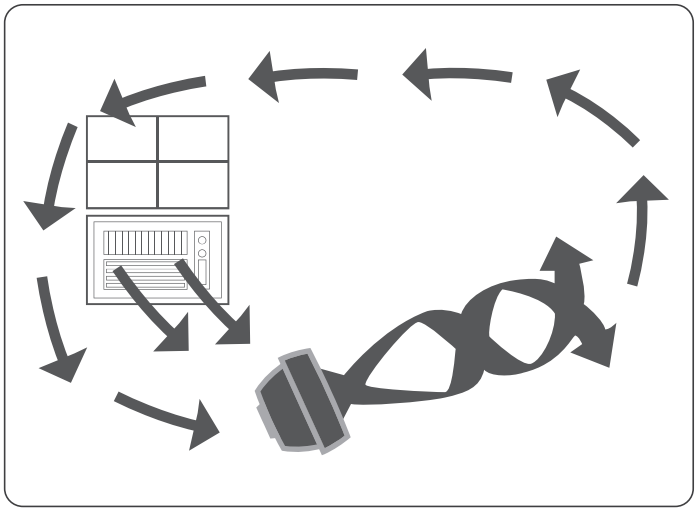

### Summer:

**Use with Air Conditioner**

Position the pedestal air circulator fan in front of your AC to circulate cold air and provide better cooling.

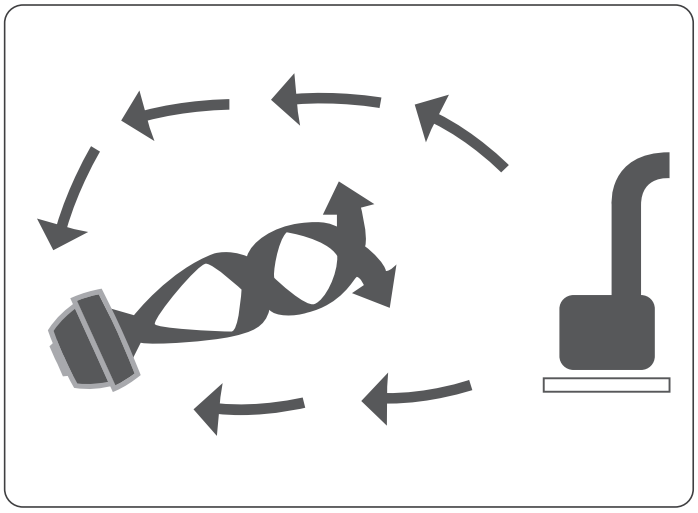

### Winter:

**Use with Heater**

Send the heat to corner of the room and circulate warm air faster.

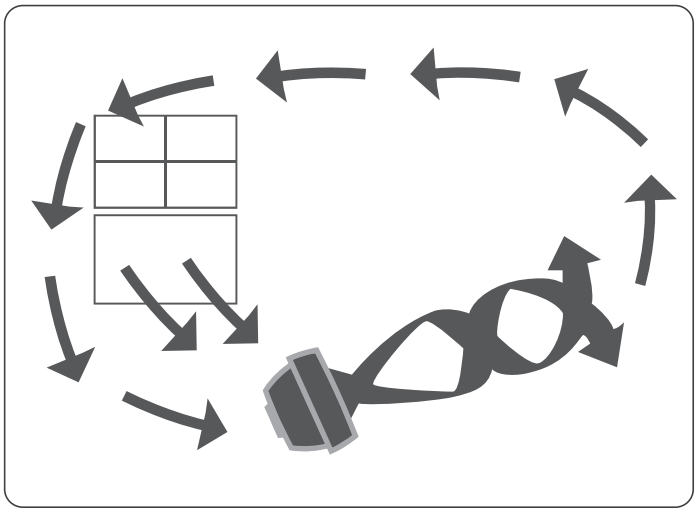

### Spring & Fall:

**Circulation**

Make the indoors as fresh and pleasant as the outdoors.

## Working Modes (Press on the remote)

| | |
|---|---|
| | **Normal Mode**<br>pedestal air circulator fan runs at the fixed speed. |
| | **Auto Mode**<br>pedestal air circulator fan speed adapts to the ambient temperature. |
| TURBO | **Turbo Mode**<br>pedestal air circulator fan runs at the maximum speed. |

## Additional Features



### Timer

When the fan is ON/OFF, touch the timer button repeatedly to set a timer from 1 to 9 hours. When the timer ends, the fan will stop/start running automatically. To cancel, set the time to 0 hour.

***Note:*** *When the auto off timer is enabled, display will return to fan speed after 3 seconds.*



### Child Lock

Long press the Mute button and Horizontal Oscillation button at the same time for 3 seconds to turn on/off Child Lock.

***Note:*** *Child Lock doesn't apply to operations from the remote control*
*You can also turn off Child Lock by re-plugging in, resetting to factory settings.*



### Memory

If the fan is turned OFF or disconnected from power, it will operate under the previous settings (except the Timer setting ) when it is turned ON again.



### Countdown Display

When long pressing buttons for Factory Reset, Child Lock, and Mute, a countdown will show on the display accordingly.

AUTO

**Display Auto Off**

Display turns off after 1 minute.
Wake up the display with any button.

## Remote Control

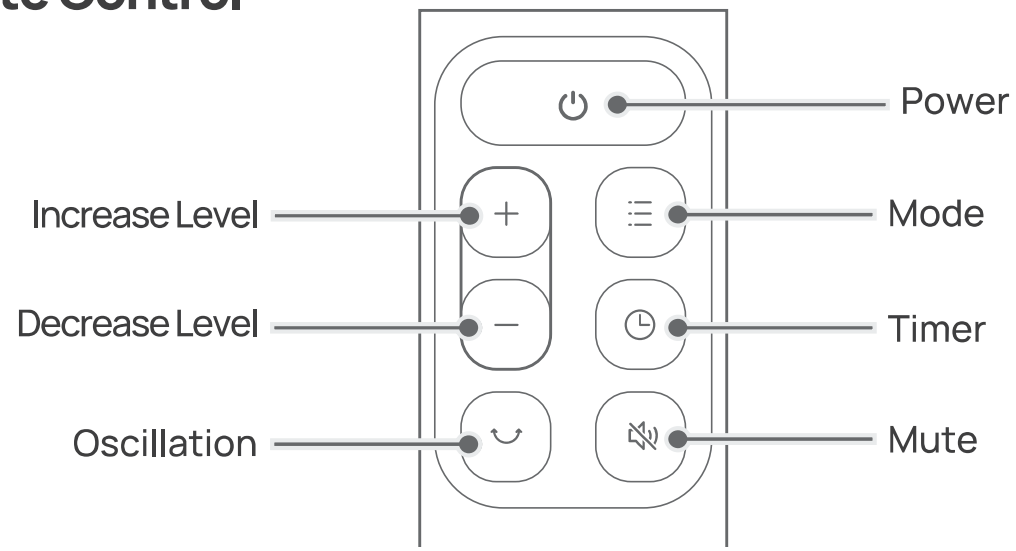


## Battery Replacement

1. Remove the battery cover in the direction indicated by the arrow.
2. Replace with two new AAA 1.5V batteries. Make sure that the positive(+) and negative(-) terminals are positioned correctly.
3. Push the battery cover back into place.

**⚠ WARNING**

- Replace with new batteries of the same type when replacement is required.
- Remove the batteries when the remote control is unused for long period of time.
- Do not attempt to dismantle the batteries.
- Do not dispose the batteries in fire, batteries may explode or leak.
- Chemical burn hazard. Keep batteries away from children.
- Do not mix old and new batteries and Do not mix alkaline, standard (carbon-zinc) or rechargeable (ni-cad, ni-mh, etc.) batteries.

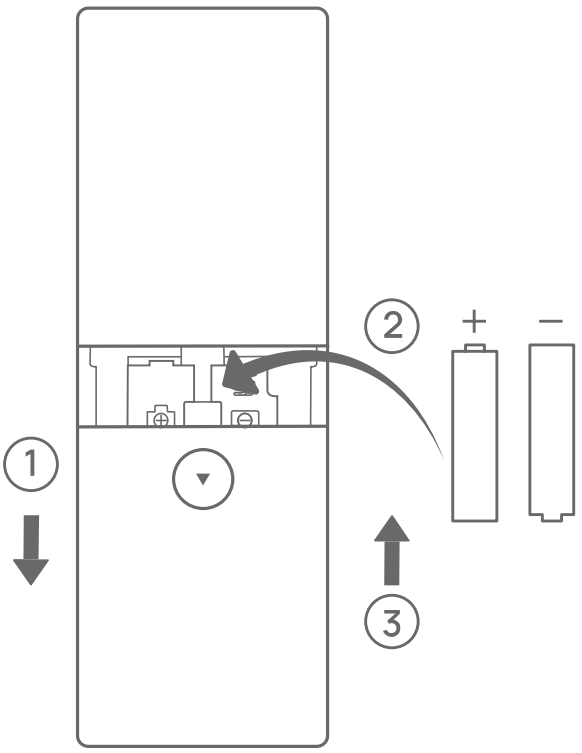

# CLEANING AND MAINTENANCE

# 05

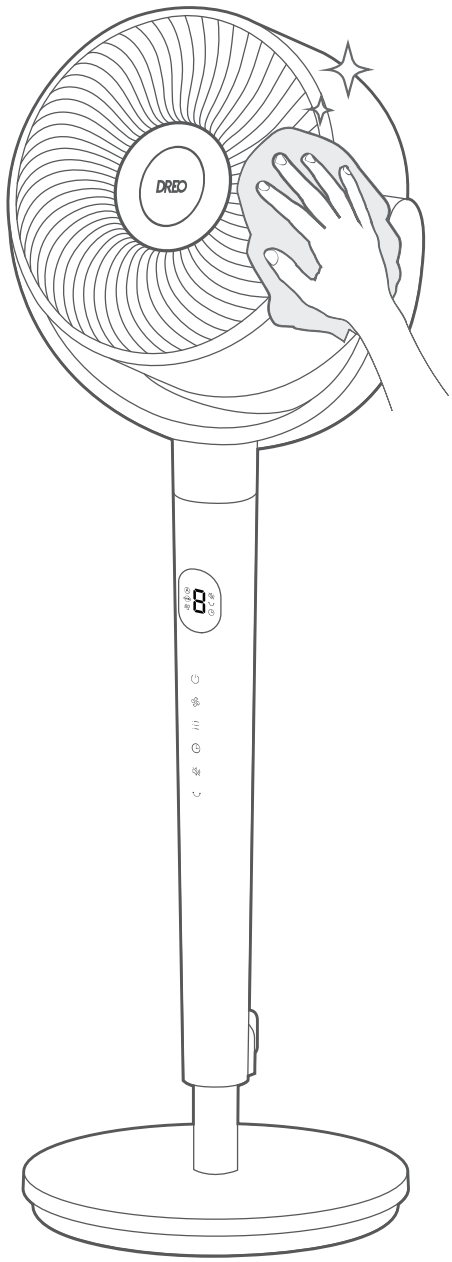


## Outer Surface

Gently wipe off the dust with a soft, dry cloth.

## Base

The base can be disassembled in the reverse order of assembly.

## CAUTION

1. Always unplug the fan before any cleaning or maintenance to avoid the risk of fire, electric shock, or injury to persons.
2. Do not immerse in water or get water inside the motor housing.
3. Do not use any chemical agents when cleaning the fan.
4. Store in a cool, dry place and cover it to protect from dust.

## WARNING

To reduce the risk of electrical shock and injury to persons, turn off and unplug the appliance before any cleaning and maintenance.

1

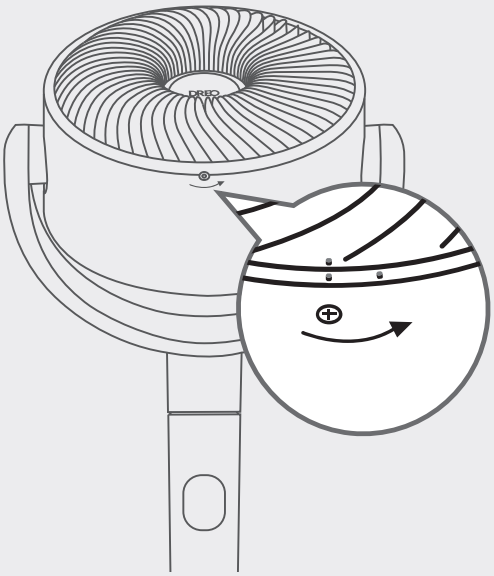

Remove the screw on the front grille, rotate the grille counterclockwise to take off.

2

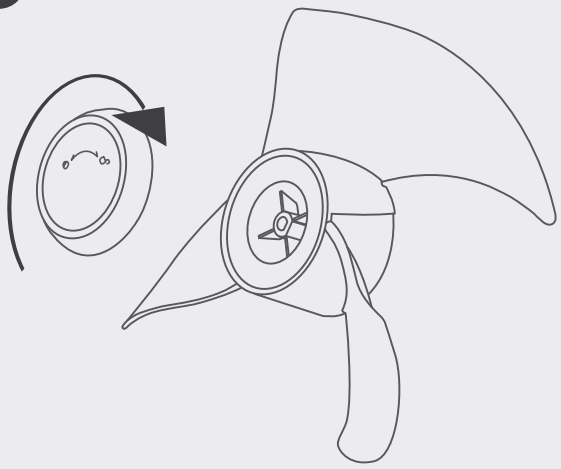

Remove the blade cap by rotating it as shown and take the blade assembly out of the shaft.

3

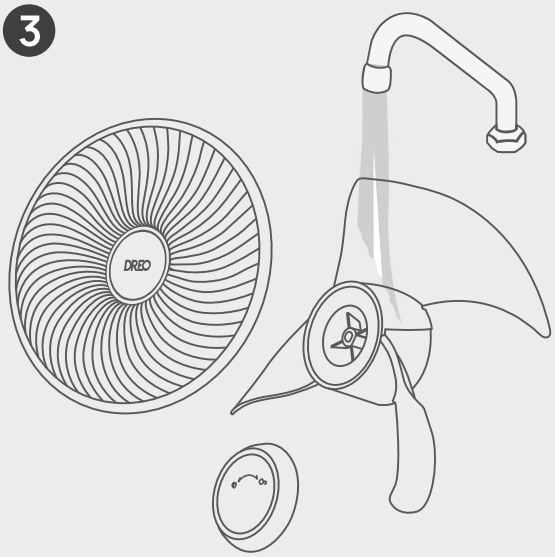


Rinse cap, blades, and grille under running water or with a clean, damp cloth.

4

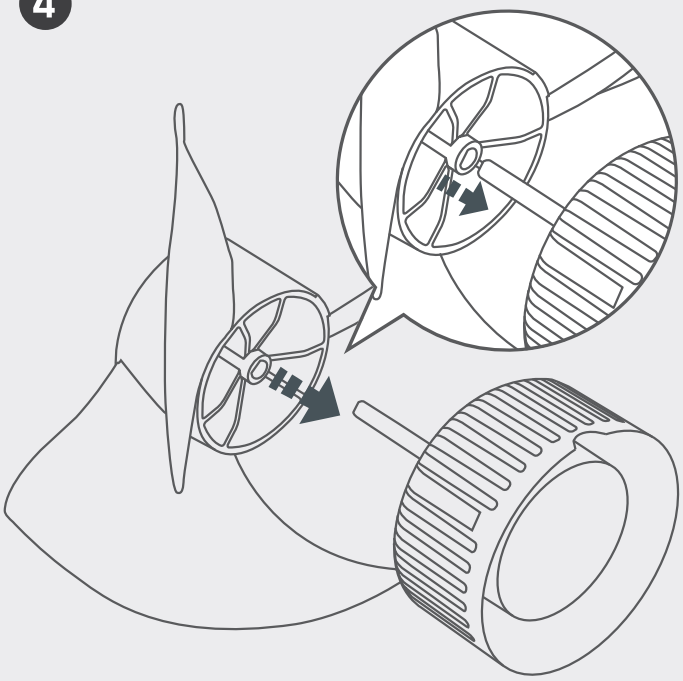

Dry up all parts, and insert the blade assembly back into the shaft by aligning the D-shaped points on the center.

5

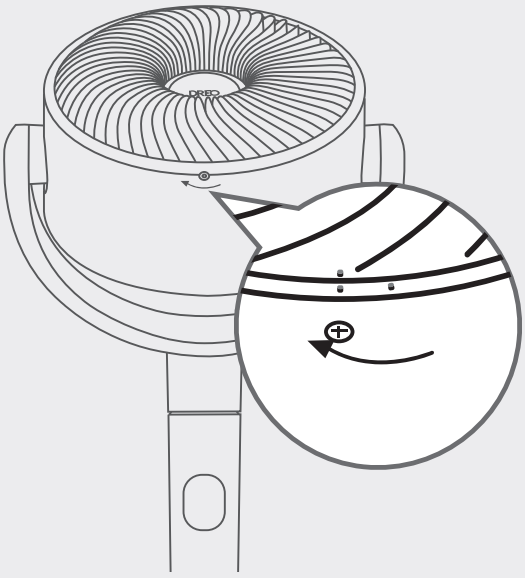

Align the point on the front grille with the right point on the casing, then rotate the grille clockwise and install the screw back in place.

# TROUBLESHOOTING 06

## My pedestal air circulator fan won't turn on!

Make sure that the cord is connected to a powered outlet and the mains voltage corresponds with the voltage indicated on the pedestal air circulator fan.

## My pedestal air circulator fan is shaky and wobbling!

1. Place the pedestal air circulator fan on a flat, level surface.
2. Incorrect installation might also cause shakiness. Please refer to the assembly instructions in page 3-4.

## My pedestal air circulator fan is making vibration and noise!

1. Place the pedestal air circulator fan on a flat, level surface.
2. Be sure not to insert anything into the air inlet and outlet.
3. It is normal that the fan makes a little noise when manually adjusting the fan head.

If your problem is not listed or still persists, please contact our Customer Support (see page 16)

# DREO CUSTOMER CARE

# 07

## Default 12-Month Warranty

This appliance is covered by DREO warranty for 12 months from the date of its original purchase.

### The warranty will not apply in cases of:

**1.** Accident, misuse, or repairs performed by unauthorized personnel.
**2.** Any unit that has been tampered with or used for commercial purposes.
**3.** Normal wear and tear of wearable parts.
**4.** Use of force, damage caused by external influences.
**5.** Damage caused by non-observance of the User Manual, e.g. connection to an unsuitable mains supply or noncompliance with the instructions.
**6.** Partially or completely dismantled appliances.
**7.** Defects caused by or resulting from damages from shipping or from repairs, service, or alteration to the product or any of its parts that have been performed by a repair person not authorized by DREO.

We can only provide after-sales service for products that are sold by DREO or DREO authorized retailers and distributors. If you have purchased the appliance from a different place, please contact your seller for return and warranty issues.

# FCC STATEMENT

This device complies with Part 15 of the FCC Rules.Operation is subject to the following two conditions: (1) this device may not cause harmful interference, and (2) this device must accept any interference received, including interference that may cause undesired operation.

Please note that changes or modifications of this product is not expressly approved by the party responsible for compliance could void the user's authority to operate the equipment.

NOTE: This equipment has been tested and found to comply with the limits for a Class B digital device, pursuant to Part 15 of the FCC Rules. These limits are designed to provide reasonable protection against harmful interference in a residential installation. This equipment generates, uses and can radiate radio frequency energy and, if not installed and used in accordance with the instructions, may cause harmful interference to radio communications. However, there is no guarantee that interference will not occur in a particular installation.

If this equipment does cause harmful interference to radio or television reception, which can be determined by turning the equipment off and on, the user is encouraged to try to correct the interference by one or more of the following measures:

-Reorient or relocate the receiving antenna.

-Increase the separation between the equipment and receiver.

-Connect the equipment into an outlet on a circuit different from that to which the receiver is connected.

-Consult the dealer or an experienced radio/TV technician for help.

Model No.: DWPF09
Rev_1.1_EN

## We're Here to Help!


(888) 290-1688 (Mon - Fri, 9:00 am-5:00 pm PST/PDT)

support@dreo.com

www.dreo.com

Hesung Innovation Corp

377 Valley Rd, Unit #2686, Clifton, NJ 07013 U.S.A.


MADE IN CHINA

www.dreo.com

# Looking for help?

Contact us to get expert support.

support@dreo.com (888) 290-1688 www.dreo.com

Mon - Fri, 9:00 am-5:00 pm PST/PDT