Waterdrop

Waterdrop Reverse
Osmosis System

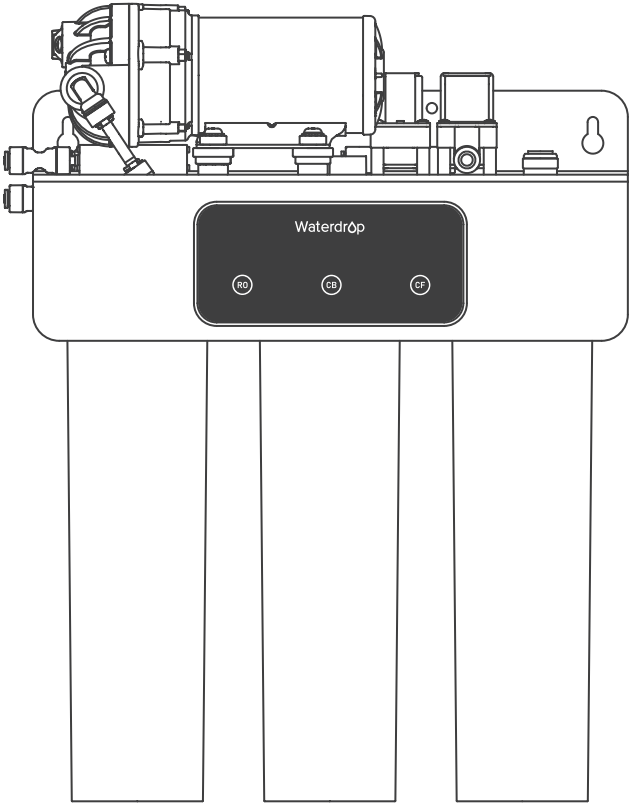

Product User Manual

Model: WD-RT34-WCA / WD-RT34-WMA

Contents

Before Installation **1**
Inspect the Package 1
Required Tools 1
Specifications 1
Product Introduction 2
Installation Sample 3
Installation Tips 3
Installation Steps **5**
Step 1: Install the Feed Water Adapter (3/8" or 1/2") 5
Step 2: Install the Faucet 6
Step 3: Install the Drain Saddle 6
Step 4:Install the Filters 7
Step 5: Position the System 7
Step 6: Connect Tubing 8
Step 7: Connect Power Cord 9
Step 8: Start up the System 9
Filter Replacement Guide **10**
Filter Life Reminder 10
How to Replace Filters 10
How to Reset the Filter Life Indicator 11
How to Flush the Filter after Replacement 11
System Maintenance **12**
Troubleshooting **13**
Limited Product Warranty **15**
Return & Repair **16**

Before Installation

Inspect the Package

Open the box and take out the main unit, all the components and connection fittings. Inspect them according to the parts list to ensure nothing is left out or damaged during shipping. If there are any parts cracked or broken, please do not proceed with the installation and contact our customer service **+1-888-352-3558 (U.S.)** or send an email to **service@waterdropfilter.com** to identify and get familiar with all components for quick installation.

Required Tools

- Variable speed drill
- Utility knife or scissors
- Drill bit: 1/4" (for drainpipe), 1" (for faucet hole)
- Adjustable wrench, pliers
- Screwdriver
- Flashlight
- Towel

Specifications

To achieve the optimal performance, it is highly recommended to use the system within the operational parameters.

Product model	WD-RT34-WCA/WD-RT34-WMA
Overall size	13.39 "×6.22 "×17.95 "
Maximum daily pure water production	450 GPD
Feed water pressure	14.5-87 psi/0.1-0.6 Mpa
Feed water temperature	41-100 °F/5-38 °C
Feed water source	Municipal tap water
Rated voltage/current	Input 100-240 V AC 2.0 A
Rated frequency	50/60 Hz

NOTE:

- The daily production rate is measured under 30 psi dynamic feed water pressure and 77 °F water temperature.
- If you are using well water as the source, please ensure that the feed water has been through a pre-filtration system.

Product Introduction

1. Parts List

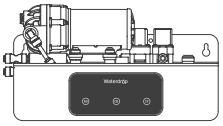

Main unit*1



Hole drilling sticker

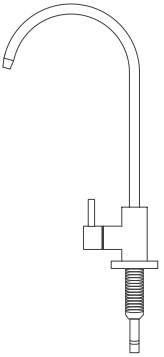

Faucet assembly*1

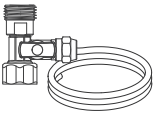

Feed water adapter 3/8"-1/2"*1
and inlet water tubing*60"
(pre-assembled)

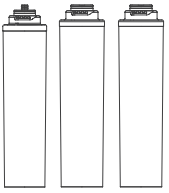

Filter*3



Wood Screw*2
(for auxiliary fixation)



Lock clip*6
(larger clip*2, smaller*4)



Red 1/4" PE tubing*60"
(Drain water tubing)



Blue 1/4" PE tubing*60"
(Pure water tubing)

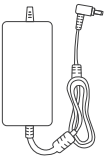

Power adapter*1

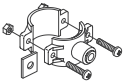

Drain saddle*1



Teflon tape*2

2. System Introduction

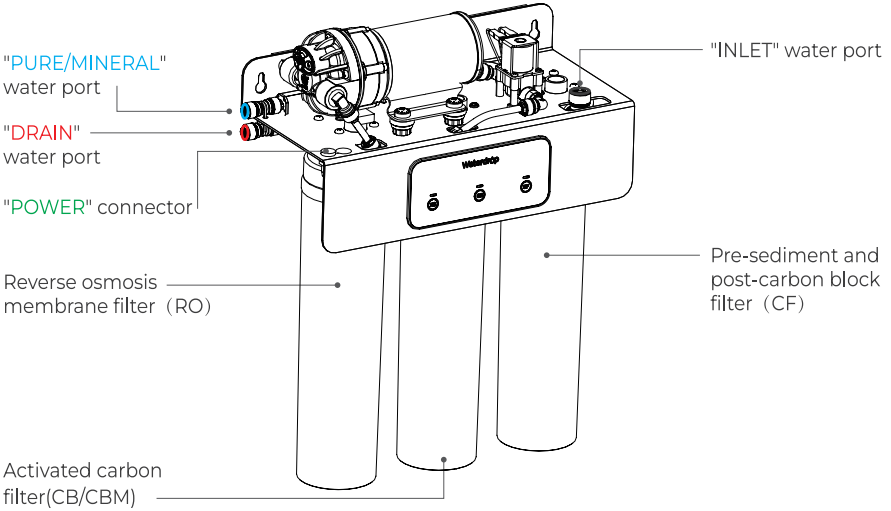

Installation Sample

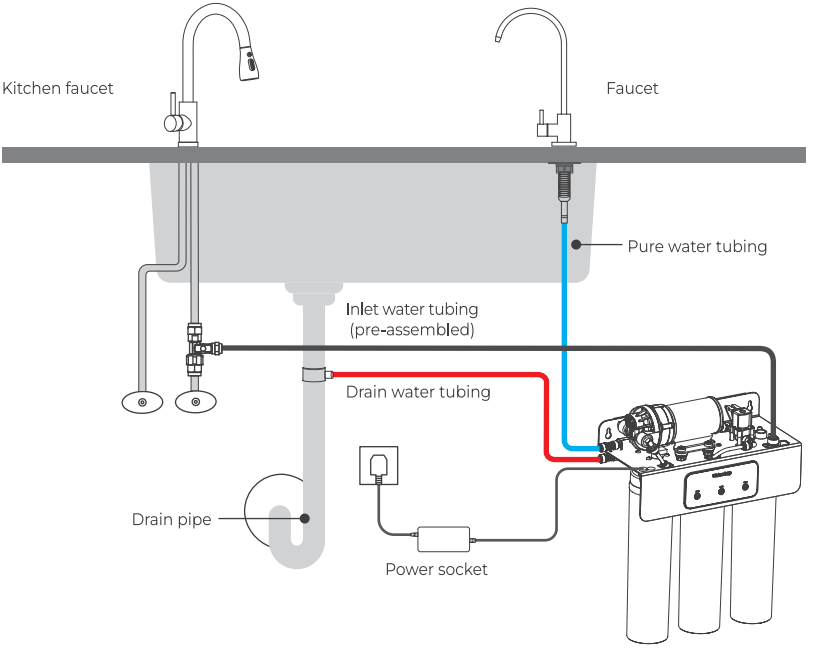

Installation Tips

1. How to Use the Quick-Connect Fittings

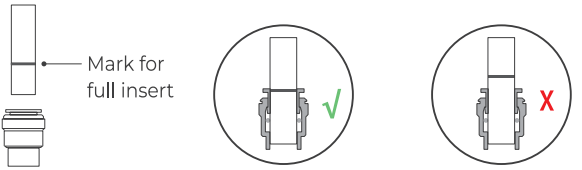

Figure 1

To connect:

· There is an existing mark **(Figure 1)** at the end of the tubing for you to confirm if the tubing is fully inserted into the fitting.

· Please push the tubing into the fitting until it reaches the mark on the tubing (about 0.8").

· Put the blue lock clip on the fitting. It will lock the tubing in place and prevent it from falling off.

NOTE:

· If the tubing is not fully inserted, no seal will be created and leakage will occur.

· If the tubing is too long, cut it to a suitable length with a sharp utility knife or scissors. Cut the tubing squarely and cleanly **(Figure 2)**.

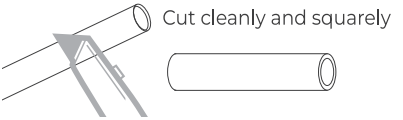

Figure 2

To disconnect:

· Remove the blue lock clip from the fitting.

· Use your thumb and index finger to press down the lock sleeve. Use your other hand to pull out the tubing from the fitting **(Figure 3)**.

NOTE: Please do not pull out the tubing directly. This will damage the fitting and cause leakage.

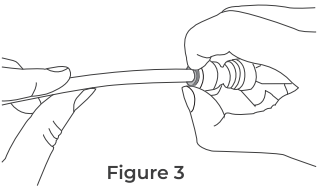

Figure 3

2. How to Drill a Hole into Your Sink or Countertop (Optional)

NOTE: Please confirm if there is an existing hole available to install the smart faucet. If not, please drill a hole in accordance with the following steps.

It's highly recommended to watch the YouTube video "How to Drill Faucet Holes" for a better understanding of the process. There is also a reference sticker to help you drill the hole. Remember to wear safety glasses to protect your eyes while drilling the faucet hole.

1. Choose a suitable place to install the faucet and leave enough space for the mounting washer to avoid touching the wall or sink. **(Figure 4)**.

2. Choose a diamond core bit for granite, and a carbide drill bit for stainless steel. Do not use a hammer drill on natural stone, glass or ceramic.

3. Glue the sticker on your sink or countertop, and then drill a hole the size of the sticker hole (1").

4. Make an indent with a center punch on a stainless-steel sink before drilling to help guide the bit.

5. Be careful when drilling on a porcelain sink, as it can be easily chipped. Apply downward pressure firmly on the bit until you break through the surface.

6. Starting at the lowest speed, and hold the drill straight with firm pressure to prevent the bit from walking on the counter.

7. Once you break through the surface, swirl the drill a little to apply pressure in a circle evenly.

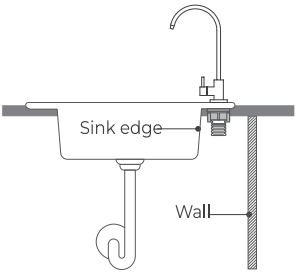

Figure 4

Installation Steps

NOTE: The RO system must be connected to the COLD water supply ONLY.
· Do not install the system in exposure to direct sunlight or harmful chemicals, nor any place where it may be damaged.
· Do not install the system near any heat source.
· Do not install the system outdoors.
· If the system is installed under the kitchen, do not hang it on the cabinet body。
· If the system need to be hanged, please confirm the strength of the object to be hanged on it, select the appropriate screws, and install by professionals.

Step 1: Install the Feed Water Adapter (3/8" or 1/2")

NOTE: The "INPUT" water tubing has been attached to the feed water adapter for easy installation.
1. Shut off the water supply. Turn on the kitchen faucet to release the water pressure.
NOTE: Make sure the water has stopped flowing before moving on to the next step. Get a towel or bucket to catch any excess water.
2. Disconnect the cold water pipe from the cold water supply valve.
3. Twist the feed water adapter onto the cold water supply valve (with its washer) and tighten it with an adjustable wrench**(Figure 5)**.
NOTE: If the cold water pipe is 3/8", unscrew the converter from the feed water adapter (Figure 6), and then implement step 3.
4. Twist the cold water pipe (with its washer) onto the feed water adapter and tighten with an adjustable wrench.

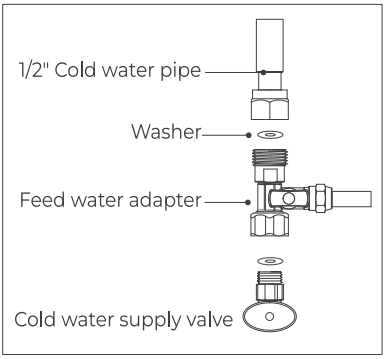

Figure 5

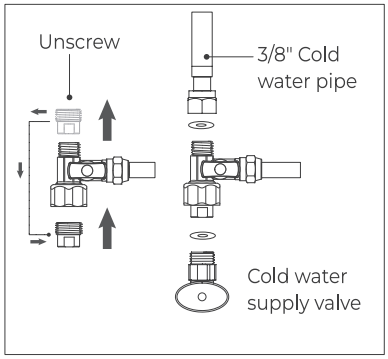

Figure 6

Step 2: Install the Faucet (Figure 7)

NOTE: If your kitchen sink or countertop does not have an existing hole, you will have to drill one (1"). (Refer to Page 4)

1. Insert the faucet spout into the faucet body.

2. Insert the faucet stem and filtered water tubing into the hole on countertop.

3. Under the sink, slip on the mounting washer and tighten it up.

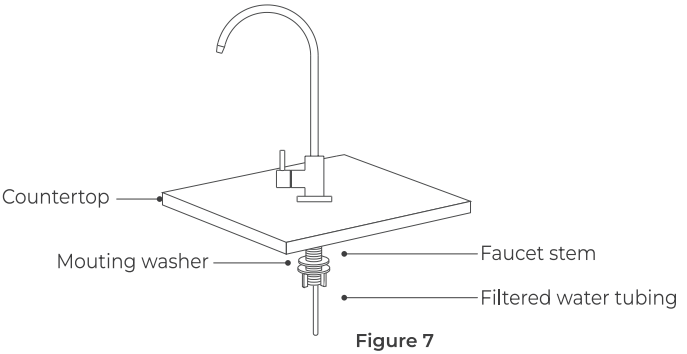

Figure 7

Step 3: Install the Drain Saddle

1. Stick the foam seal on the front plate of the drain saddle. Ensure that the hole of the foam seal is aligned with the hole of the front plate **(Figure 8)**.

2. Choose a spot on the drainpipe that is convenient for installing the drain saddle. Drill a 1/4" hole in the drainpipe. Be sure not to penetrate the opposite side of the pipe.

NOTE: It's recommended to install the drain saddle on the vertical drainpipe.

3. Slip the front plate over one end of the tubing (without a mark) and insert the tubing into the drilled hole for about 0.6" **(Figure 9)** .

4. Position the back plate on the drainpipe by tightening the screws and nuts evenly while leaving the tubing in the hole.

5. Pop the lock clip onto the fitting to secure the connection **(Figure 10)**.

NOTE: In some areas, the drain tubing must be connected to the drainpipe through the air gap. Consumers must purchase air gap accessories separately.

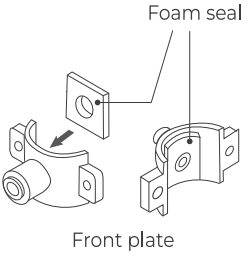

Figure 8

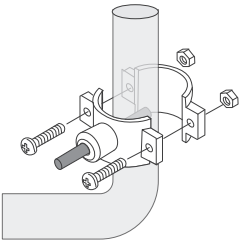

Figure 9

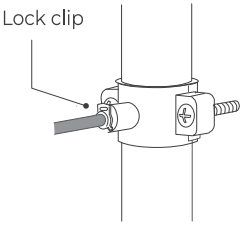

Figure 10

Step 4:Install the Filters

NOTE:

a. The sequence of filter cartridge indicator lights on the control panel corresponds to the installation order. Please verify during installation.

b. Ensure correct positioning of each filter cartridge. Incorrect placement will cause system failure and component damage.

1. Remove the plastic protective film before installing the filter.

2. Take the filter corresponding to the position, insert it into the filter connector from bottom to top, and turn it counterclockwise to lock. **(Figure11)**

3. Install all the filters in sequence.

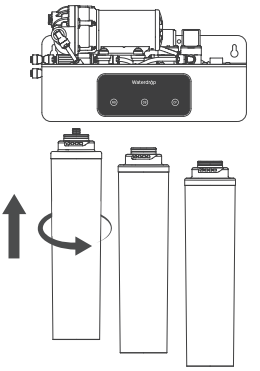

Figure 11

Step 5: Position the System

Ensure that there is sufficient space under the countertop to install the system (**13.39"*6.22"*17.95"**) **(Figure 12)**.

1. The power-supply receptacle for the appliance shall be installed in the cabinet or on the wall adjacent to the undercounter space in which the appliance is to be installed.

2. There should be an opening through the partition between the compartments specified in (a) that is large enough for the attachment plug to pass through. The longest dimension of the opening shall not be more than 1.5" (38 mm).

3. If the partition is made of wood, the edges of the opening specified in (b) should be smooth and rounded. If the partition is made of metal, it should be protected with an edge protector provided by the manufacturer.

4. Caution should be exercised when installing or removing the appliance to reduce the possibility of damage to the supply cord.

NOTE: Position the front panel facing you, which will be convenient for future filter replacement and indicator checking. You can also adjust the placement direction of the system according to the layout under the sink.

The system must be installed horizontally, not tilted, placed on the side, lying on the side, or inverted.

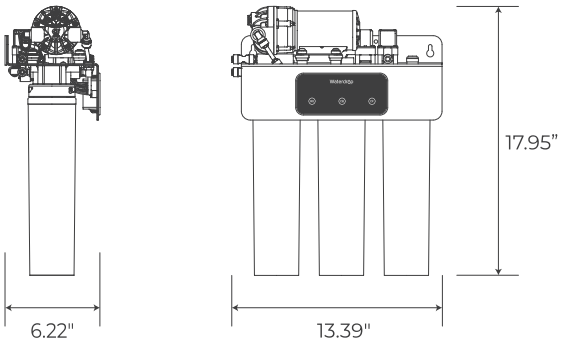

Figure 12

Step 6: Connect Tubing

NOTE: Confirm the tubing length you need first, and then cut the tubing if it's too long, referring to "How to Use the Quick-Connect Fittings" on page 3.

Before connecting the PE tubing to the system, remove the plugs from corresponding water ports **(Figure 13)**.

Connect Tubing Step (Figure 14)

1. Insert "INLET" water tubing (**white tubing**) into the "INLET" water port .

2. Insert "PURE" water tubing (**blue tubing**), into "PURE" water port .

3. Insert "DRAIN" water tubing (**red tubing**) into "DRAIN" water port (**under the metal panels**).

NOTE: Make sure it is fully inserted until you reach the mark on the tubing and pop up the lock clips into every water port to avoid leaking water **(Figure 15)**.

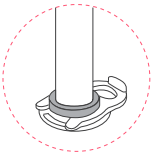

Figure 15

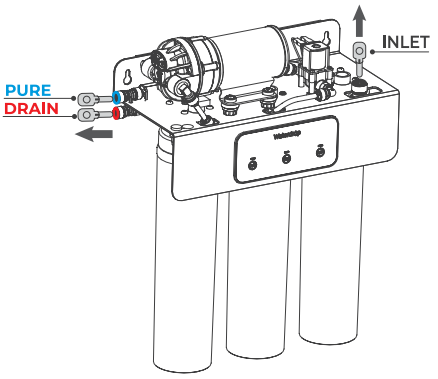

Figure 13

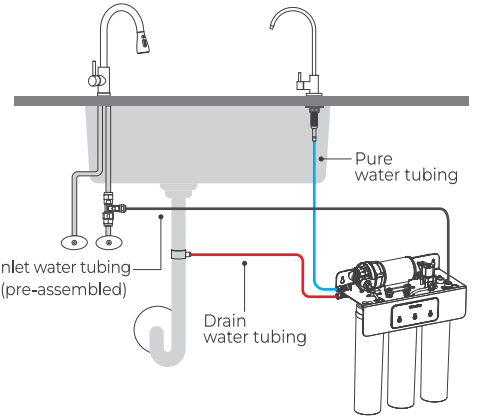

Figure 14

Step 7: Connect Power Cord

Connect Power Adapter: Insert the DC head of the power adapter into the "POWER" port which is on the left front of the metal paneL **(Figure 16)**.

NOTE: Please do not connect power socket now.

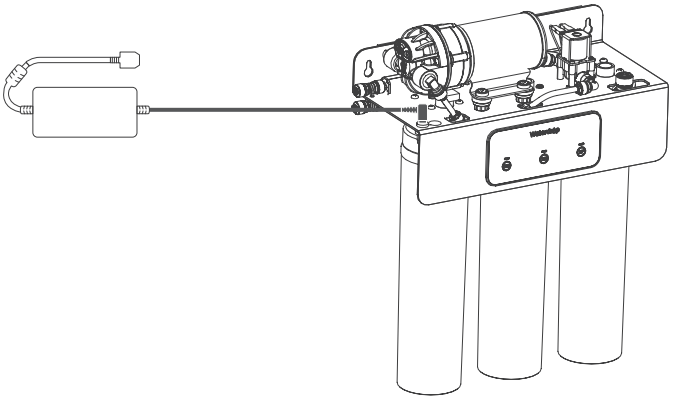

Figure 16

Step 8: Start up the System

1. Open the cold water valve on the cold water pipe, and carefully check whether there is water leakage at the joints connecting the tee.

2. Connect the plug end of the power adapter to the socket when there is no leakage point.

⚠ **WARNING:**

· In order to ensure the safety of your electricity and the normal use of the machine, the power plug of the machine must be inserted into the socket that complies with local codes and regulations.

· If you have completed all installation operations and confirmed that the power plug is normally powered on, but the machine cannot be powered on, please contact us at any time through the contact information of the manual.

3. After the system is powered on for the first time, the flushing operation is automatically completed, which takes 30 minutes. After you confirm that the machine is powered on, you need to open the RO faucet. The machine will automatically flush, and the indicator light on the machine will flash blue until the indicator light stops blinking and the flushing is complete.

4. Confirm the flush is completed before turning off the faucet and ensure it's not leaking.

5. Please use cable ties to secure the power adapter firmly in place to prevent it from moving when impacted, thus avoiding malfunction. Stay away from any water sources, including pipe fittings, the bottom of the basement, and wet floors.

NOTE:

a. When used for the first time, due to the presence of air inside the machine, the noise of the booster pump may be higher than that during normal use.

b. When the faucet is turned on for the first time, gas will spray out, which is a normal phenomenon. It will return to its normal state after the machine is filled with water.

Filter Replacement Guide

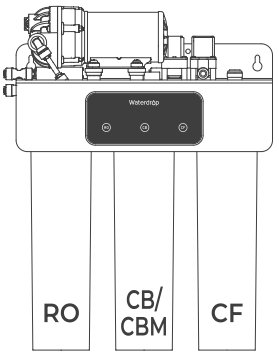

RO: Reverse Osmosis Membrane Filter
Filter Life: Up to 24 months

CB/CBM: Activated Carbon Filter
Filter Life: Up to 12 months

CF: Pre-sediment and Post-carbon Block Filter
Filter Life: Up to 6 months

Filter Life Reminder

NOTE: Filter life may vary depending on source water quality and water usage. Please replace the filter according to the reminder of the filter life indicators.

The filter life indicator is a black panel located at the front of the machine.

There are helpful electronic filter indicators on the panel that will notify you to perform a routine filter replacement by color change.

Status	Remaining life (day)	Remaining capacity (G)	Indication	
			Light	Buzzer
Normal	>15	>40	Blue	N/A
Pre-warning	>0, ⩽15	>0, ⩽40	Yellow	Beep twice when getting water
Warning	0	0	Red	Constant beeps when getting water

NOTE: The indicators will notify you according to the usage time or process capacity of the filters, whichever comes first.

How to Replace Filters (Take CF filter for an example)

If the filter expires, please purchase and replace the filter immediately. Otherwise, the filtration efficiency will decrease significantly and affect the performance.

1. Before removing the filter, please turn off the faucet first and wait 5 min to fully release the internal pressure of the RO system, which makes the filter easier to remove and install.

2. Twist off the filter (If the filter cannot be removed at this time, it is necessary to close the water supply, turn on the faucet, relieve the pressure inside the filter, and then remove the filter).

NOTE: After removing the old filter, it is recommended to immediately pour out the remaining water in the old filter to prevent water from spilling.

3. Install the new filter in the correct position.

4. Reset the filter life indicator and flush the filter after replacement refer to the following steps.

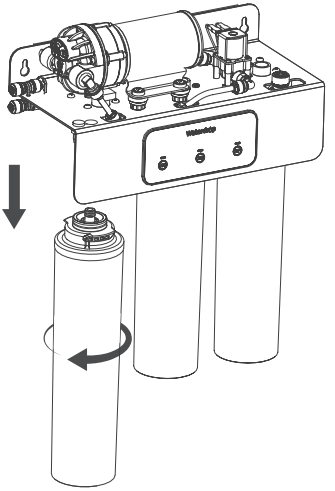

Filter removal

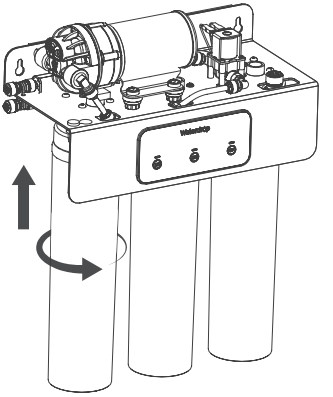

Filter installation

How to Reset the Filter Life Indicator (Take CF Filter Life Indicator as an Example)

Hold the CF icon for 7 seconds until the system beeps.

NOTE: Refer to the above method, hold down the icon to reset the corresponding filter.

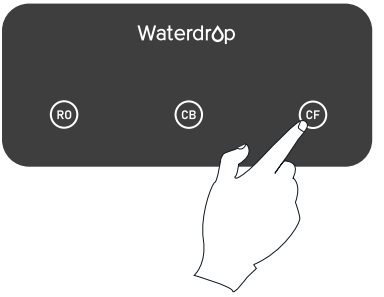

How to Flush the Filter after Replacement

NOTE: The display screen on front panel will show the flushing status during the process.

For CF filter: Turn on the faucet to flush for 15 minutes.

For RO filter: Turn on the faucet to flush for 30 minutes.

For CB&CBM filter: Turn on the faucet to flush for 15 minutes.

System Maintenance

• If you don't use the system for more than one week, turn on the Faucet, shut off the cold water supply valve, and disconnect the power. Seal the filters and store them in the refrigerator (not the freezer). You need to open the faucet and allow it to run for 10 minutes first before using the system again. Otherwise, you need to replace the filters, as bacteria may grow when the system is not used for a long time.

• Please replace the filter regularly according to the filter life indicator.

NOTE: While the testing was performed under standard laboratory conditions, actual performance may vary depending on the source water quality and water usage. In case of premature blockage and failure of the filters, it's recommended to replace the filter in accordance with the actual usage.

Clean the system with clear water. Do not spray the water directly. Do not use steel wool, abrasive cleaner or corrosive liquid such as gasoline or acetone.

When cleaning, do not pour other liquids into the filter to avoid damage to the filter system.

• Keep the waste water pipe unobstructed to avoid damage to the filter or internal components. When the drain pipe is blocked, do not use the system (please turn off the power) to avoid waste water from soaking the floor.

• Check the system and water pipe fittings regularly for water leakagee to avoid any property damage.

Regularly check whether the power supply and wires are damaged or loose to avoid major accidents caused by electric leakage.

• If you are using well water as the source, please ensure that the feed water has been through a pre - filtration system. Otherwise, large particles in the well water will easily clog the filter and shorten the filter life.

Troubleshooting

· If the System Can't Be Powered on After You Insert the Plug of Power Adapter

Check the power under the sink, as this mostly occurs when the power under the sink is off. Also, check the connection between the plug and the power outlet, and ensure that the system has been plugged correctly into the power outlet, as this may occur in a few cases. To test if there is a problem with the system itself, just pick up the system and try another power outlet. Please contact us if the system can't be powered on. We will help you figure it out.

· No Output Water from Faucet

a. Filter expired. Check the filter life indicators to confirm which filter need to be replaced and replace it immediately.

b. Low water pressure. Check and confirm the water pressure is between 14.5 psi and 87 psi.

c. Water supply is off. Turn on the feed water adapter or water supply valve.

d. Incorrect filter installation. Re-install the three filters, and make sure they are fitted properly.

e. A tubing is crimped. Check all tubing and remove any crimps.

· Low Water Flow at the Faucet

a. Leak from tubing connection. Check and ensure all tubing is installed correctly and completely

b. Filter expired. Check the filter life indicators to confirm which filter needs to be replaced and replace it immediately.

C. Low water temperature. Be sure to use the system at a temperature of 41-100°F.

d. Use well water as the source and the feed water has not been through a filtration system, the filter has been clogged. If you are using well water as the source, please ensure that the feed water has been through a pre- filtration system. Otherwise, large particles in the well water will easily clog the filter and shorten the filter life.

• Water Leakage

a. Check all joints, fittings and tubing connections to locate the leakage. Make sure the filters are well installed.

b. Turn off the feed water adapter, unplug the power supply, and please contact the customer service hotline +1-888 - 352 - 3558 or send email to service@waterdrop filter.com for assistance.

• Filtered Water from the Faucet Tastes Like Tap Water

a. The filters are not well-installed. Make sure the filters are placed properly.

b. Filter expires. Check the filter life indicators to confirm which filter needs to be replaced and replace immediately.

• Booster Pump Overworked Reminder

a. The buzzer keeps beeping for 3 minutes.

b. Continuously dispensing water for more than 30 minutes. Power on the system again to recover

c. There is a leak at the tubing connection between the system and the Faucet. Turn off the power. Check the tubing connection, make sure the tubing is inserted into the quick-connect fitting properly and firmly and power on the system again.

• Booster Pump Starting and Stopping Frequently Reminder

The buzzer sounds 5 times.

There is an internal pressure imbalance. Disconnect the power. Turn on or turn off the Faucet completely and remove all tubing crimps. Make sure the faucet is not blocked and power on the system again.

· Loud Sound of RO System

The sound will not exceed 65 dB, which makes no difference to everyday lives (65 dB is tested under standard laboratory conditions, where the feed water pressure is between 14.5 psi and 87 psi). A loud sound may be caused by the following reasons:

a. The system is not positioned in a flat area. Make sure the system is placed smoothly without shaking.

b. The system is placed against the cabinet. Do not place the system against the cabinet. The system may vibrate when it works.

c. The water pressure is unstable. Check and confirm the water pressure is between 14.5 psi and 87 psi. The sound will decrease when the water pressure becomes stable.

Limited Product Warranty

At Waterdrop, we are proud to offer our customers a wide array of high-quality products, including reverse osmosis systems. We offer a 30-day money-back return guarantee, a 1-year manufacturer warranty, and lifetime tech support for all our products from the date the product is received. During the warranty period, we will replace or repair any part deemed defective, as long as the product has not been subjected to tampering, alteration, lack of regular maintenance or improper use after delivery. The cost of repair or replacement under those excluded circumstances shall be borne by the consumer.

Conditions of Validity of this Limited Product Warranty

THIS LIMITED PRODUCT WARRANTY SHALL ONLY BE VALID IF:

1. The feed water pressure is no less than 14.5 psi and no higher than 87 psi.
2. The feed water temperature must be no less than 41 °F and no more than 100°F.
3. The feed water must have a pH between 6.5 and 8.5.
4. Turbidity must be less than 1.0 NTU.
5. The feed water must be municipal tap water. If you are using well water as the source, please ensure that the feed water has been through a pre-filtration system.
6. The Total Dissolved Solids (TDS) must be less than 750 ppm.
7. The max hardness must be less than 7 grains per gallon.

Any information or suggestion with respect to our product concerning applications, specifications or standards is provided solely for your convenient reference. The quality of water supplies may vary seasonably or over a period of time. Your water usage may vary as well. The manufacturer assumes no liability for the determination of the proper equipment necessary to meet your requirements, and we do not authorize others to assume such obligation on our behalf. You must verify and test the suitability of any information with respect to the product for your specific application.

Conditions that render this Limited Product Warranty void:

THIS LIMITED PRODUCT WARRANTY SHALL NOT BE VALID IF:

1. The product is purchased from someone other than our official website or our authorized dealers, as we cannot verify or guarantee the integrity or authenticity of the Product.
2. Improper storage, installation, maintenance, handling, use and/or alterations of the Product, including, but not limited to, non-compliance with the installation, maintenance and standard operation conditions stated in the Manual and this Limited Product Warranty.
3. Unreasonable use, unintended use, or misuse of the product for something other than its intended purpose as a reverse osmosis system.
4. Use of replacement parts, filters, membranes or other accessories that are not sold or manufactured by Waterdrop for use with this particular product.
5. Damage not resulting from manufacturing defects that occur while the product is in the original purchaser's possession.
6. Installation of the product with known or visible manufacturing defects at the time of installation.
7. Damage caused by freezing, flood, fire or Act of God.

Our sole obligation under this warranty shall be repair or replacement of a non-conforming product or parts of this product, or at our option, return of the product and a refund of the purchase price. Our obligation does not include the cost of transportation. We are not responsible for damage in transit, and claims for such damage should be presented to the carrier by the customer.

The warranties set forth herein are the only warranties made by us with respect to the product. We make no warranties, expressed or implied, including, but not limited to, any warranties of fitness or merchantability, except as expressly set forth above.

NOTE: In case some states do not allow limitations on how long an implied warranty lasts, you may choose to return the system. If you choose to keep it, you agree that the above limitations still apply to you.

Return & Repair

We accept returns within the return window if you are not satisfied with your product. In order to fulfill the warranty requirement, please contact us by phone at 1-888-352-3558, by email at service@waterdrop filter.com providing your name, order number, phone number, a description of the product involved and an explanation of the defect, and we will be more than happy to assist you.

This device complies with part 15 of the FCC Rules. Operation is subject to the following two conditions: (1) This device may not cause harmful interference, and (2) this device must accept any interference received, including interference that may cause undesired operation.

CAUTION: Changes or modifications not expressly approved by the party responsible for compliance could void the user's authority to operate the equipment.

Note: This equipment has been tested and found to comply with the limits for a Class B digital device, pursuant to part 15 of the FCC Rules. These limits are designed to provide reasonable protection against harmful interference in a residential installation. This equipment generates, uses and can radiate radio frequency energy and, if not installed and used in accordance with the instructions, may cause harmful interference to radio communications. However, there is no guarantee that interference will not occur in a particular installation. If this equipment does cause harmful interference to radio or television reception, which can be determined by turning the equipment off and on, the user is encouraged to try to correct the interference by one or more of the following measures:
— Reorient or relocate the receiving antenna.
— Increase the separation between the equipment and receiver.
— Connect the equipment into an outlet on a circuit different from that to which the receiver is connected.
— Consult the dealer or an experienced radio/TV technician for help.

Importer: Ecolife Technologies, Inc.
Address: 1951 SLynx Pl, Ontario, CA 91761
Telephone Number: 1-888-352-3558 (U.S.)

Double insulation equipment Description: This equipment meets the double insulation standard (Class II) and does not need to be grounded. Do not use a ground plug or connect the device to a ground power supply.
Electrical Safety Warning: This device has been designed as a double insulated device to provide safe use. Do not attempt to disassemble or modify the device. Otherwise, the insulation layer may be damaged and security risks may arise.
Maintenance warning: The insulation layer of the equipment should not be removed or damaged at will. In case of equipment failure, seek professionally certified repair services.

Disposal

Dispose of the packaging material in an environmentally friendly manner so that it can be recycled.
The device is governed by the European Directive 2012/19/EU on waste electrical and electronic equipment (WEEE). Do not dispose of the device as normal domestic waste, but rather in an environmentally friendly manner via an officially appro ste disposal company.

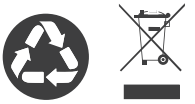

Waterdrop

Filter Better Live Healthier

Manufacturer Technical Support
Tel: 1-888-352-3558 (U.S.)
E-mail: service@waterdropfilter.com

Made in China P001
Qingdao Ecopure Filter Co., Ltd.

24/7
365 Service

主机说明书

此页不印刷

印刷品技术要求 IMPORTANT PRINTING CAUTION

1. 印刷要求 □覆光膜 □覆亚膜 □UV油 ☒塑油 □油 丝印
2. 材质要求 封面封底250g铜版纸覆亚膜，内页157g铜版纸
3. 颜色要求 四色印刷

图像颜色请依据数码稿印刷
请不要擅自变更来稿件，如须修改，请联系伊可普做有关决定