BOSE MUSIC AMPLIFIER

Please read and keep all safety, security, and use instructions.

Bose Corporation hereby declares that this product is in compliance with the essential requirements and other relevant provisions of Directive 2014/53/EU and all other applicable EU directive requirements. The complete declaration of conformity can be found at: www.Bose.com/compliance

This product conforms to all applicable Electromagnetic Compatibility Regulations 2016 and all other applicable UK regulations. The complete declaration of conformity can be found at: www.Bose.com/compliance

Bose Corporation hereby declares that this product is in compliance with the essential requirements per Radio Equipment Regulations 2017 and all other applicable UK regulations. The complete declaration of conformity can be found at: www.Bose.com/compliance

Important Safety Instructions

Do not use this apparatus near water.

Clean only with a dry cloth.

Do not block any ventilation openings. Install in accordance with the manufacturer's instructions.

Only use attachments/accessories specified by the manufacturer.

Refer all servicing to qualified personnel. Servicing is required when the apparatus has been damaged in any way, such as power-supply cord or plug is damaged, liquid has been spilled or objects have fallen into the apparatus, the apparatus has been exposed to rain or moisture, does not operate normally, or has been dropped.

WARNINGS/CAUTIONS

This symbol on the product means there is uninsulated, dangerous voltage within the product enclosure that may present a risk of electrical shock.

This symbol on the product means there are important operating and maintenance instructions in this guide.

0-3

Contains small parts which may be a choking hazard. Not suitable for children under age 3.

This product contains a tempered glass surface. Use caution to avoid impact. In the event of breakage, use care in handling broken glass.

- To reduce the risk of fire or electrical shock, do NOT expose this product to rain, dripping, splashing, or moisture and do not place liquid filled objects such as vases, on or near the product.
- Keep the product away from fire and heat sources. Do NOT place naked flame sources, such as lighted candles, on or near the product.
- Do NOT make unauthorized alterations to this product.
- Do NOT use a power inverter with this product.
- Do NOT use in vehicles or boats.
- Where the mains plug or an appliance coupler is used as the disconnect device, the disconnect device shall remain readily operable.
- Only use the mounting hardware supplied with this product.
- Do not mount on surfaces that are not sturdy, or that have hazards concealed behind them, such as electrical wiring or plumbing. If you are not sure about installing the bracket, contact a qualified professional installer. Ensure the bracket is installed according to local building codes.

- Do not mount the product in locations where condensation may occur.
- Only for mounting on the following surfaces:
  - Rack
  - Wallboard ≥ 3/8” (10 mm)
  - Masonry
  - Wood

  If mounted on surfaces other than stated above please contact a professional installer.
- Due to ventilation requirements, Bose does not recommend placing the product in a confined space such as in a wall cavity or in an enclosed cabinet.
- Do not place or install near any heat sources, such as fireplaces, radiators, heat registers, stoves or other apparatus (including amplifiers) that produce heat.
- To reduce the risk of fire, do not place any heating or cooking appliance beneath this product.
- The product label is located on the bottom of the product.

NOTE: This equipment has been tested and found to comply with the limits for a Class B digital device, pursuant to Part 15 of the FCC Rules. These limits are designed to provide reasonable protection against harmful interference in a residential installation. This equipment generates, uses, and can radiate radio frequency energy and, if not installed and used in accordance with the instructions, may cause harmful interference to radio communications. However, there is no guarantee that interference will not occur in a particular installation. If this equipment does cause harmful interference to radio or television reception, which can be determined by turning the equipment off and on, the user is encouraged to try to correct the interference by one or more of the following measures:

- Reorient or relocate the receiving product or antenna.
- Increase the separation between the equipment and receiver.
- Connect the equipment into an outlet on a circuit different from that to which the receiver is connected.
- Consult the dealer or an experienced radio/TV technician for help.

Changes or modifications not expressly approved by Bose Corporation could void the user's authority to operate this equipment.

This device complies with part 15 of the FCC Rules and with ISED Canada license-exempt RSS standard(s). Operation is subject to the following two conditions: (1) This device may not cause harmful interference, and (2) this device must accept any interference received, including interference that may cause undesired operation.

This device complies with FCC and ISED Canada radiation exposure limits set forth for general population. This equipment should be installed and operated with a minimum distance of 20 cm between radiator and your body. This transmitter must not be co-located or operating in conjunction with any other antenna or transmitter.

This device for operation in the 5150 – 5250 MHz is only for indoor use to reduce the potential for harmful interference to co-channel mobile satellite systems.

CAN ICES-3(B)/NMB-3(B)

For Europe:

Frequency bands of operation 2400 to 2483.5 MHz, 5150 to 5350 MHz, and 5470 to 5725 MHz.

Maximum transmit power less than 20 dBm EIRP.

Maximum transmit power is below regulatory limits such that SAR testing is not necessary and exempt per applicable regulations.

This device is restricted to indoor use when operating in the 5150 to 5350 MHz frequency range in all EU Member States listed in the table.

BE	DK	IE	UK(NI)	FR	CY	SK	HU	AT	SE
BG	DE	PT	EL	HR	LV	LT	MT	PL	
CZ	EE	FI	ES	IT	RO	LU	NL	SI	

This symbol means the product must not be discarded as household waste, and should be delivered to an appropriate collection facility for recycling. Proper disposal and recycling helps protect natural resources, human health and the environment. For more information on disposal and recycling of this product, contact your local municipality, disposal service, or the shop where you bought this product.

Low-power Radio-frequency Devices Technical Regulations

Without permission granted by the NCC, any company, enterprise, or user is not allowed to change frequency, enhance transmitting power or alter original characteristic as well as performance to an approved low power radio-frequency devices. The low power radio-frequency devices shall not influence aircraft security and interfere legal communications; If found, the user shall cease operating immediately until no interference is achieved. The said legal communications means radio communications is operated in compliance with the Telecommunications Management Act. The low power radio-frequency devices must be susceptible with the interference from legal communications or ISM radio wave radiated devices.

Product Power State Table

The product, in accordance with the Ecodesign Requirements for Energy Related Products Directive 2009/125/EC and the Ecodesign for Energy-Related Products and Energy Information (Amendment) (EU Exit) Regulations 2020, is in compliance with Commission Regulation (EU) 2023/826. For information about power consumption for different standby modes and the period after which the product automatically reverts to those modes, visit www.Bose.com/compliance and select this regulation. The product is equipment with HiNA functionality.

	Wired Network
Wired network port deactivation/activation procedures. Deactivating all networks will enable standby mode.	**Ethernet**: To activate an Ethernet connection, connect one end of an Ethernet cable to the Ethernet port on the soundbar and the other end to an Ethernet source. To deactivate, remove the Ethernet cable. **Supplemental Mode**: To deactivate and set the amplifier to Main, flip the **ADVANCED SETTINGS** switch A to the up position.

Names and Contents of Toxic or Hazardous Substances or Elements						
	Toxic or Hazardous Substances and Elements					
Part Name	**Lead (Pb)**	**Mercury (Hg)**	**Cadmium (Cd)**	**Hexavalent (CR(VI))**	**Polybrominated Biphenyl (PBB)**	**Polybrominated diphenylether (PBDE)**
PCBs	X	O	O	O	O	O
Metal Parts	X	O	O	O	O	O
Plastic Parts	O	O	O	O	O	O
Speakers	X	O	O	O	O	O
Cables	X	O	O	O	O	O

This table is prepared in accordance with the provisions of SJ/T 11364.

O: Indicates that this toxic or hazardous substance contained in all of the homogeneous materials for this part is below the limit requirement of GB/T 26572.

X: Indicates that this toxic or hazardous substance contained in at least one of the homogeneous materials used for this part is above the limit requirement of GB/T 26572.

Equipment name: Amplifier, Type designation: 437308						
	Restricted substances and its chemical symbols					
Unit	Lead (Pb)	Mercury (Hg)	Cadmium (Cd)	Hexavalent chromium (Cr+6)	Polybrominated biphenyls (PBB)	Polybrominated diphenyl ethers (PBDE)
PCBs	-	○	○	○	○	○
Metal Parts	-	○	○	○	○	○
Plastic Parts	○	○	○	○	○	○
Speakers	-	○	○	○	○	○
Cables	-	○	○	○	○	○

Note 1: "○" indicates that the percentage content of the restricted substance does not exceed the percentage of reference value of presence.

Note 2: The "–" indicates that the restricted substance corresponds to the exemption.

Date of Manufacture: The eighth digit in the serial number indicates the year of manufacture; "2" is 2012 or 2022.

Importers: Bose Electronics (Shanghai) Company Limited, Level 6, Tower D, No. 2337 Gudai Rd. Minhang District, Shanghai 201100 | Bose Products B.V., Vijzelstraat 68, 1017HL Amsterdam, The Netherlands | Ingram Micro Mexico SA de CV, Joselillo 3 Int. Piso 5 Col. El Parque, Naucalpan de Juarez, Edo Mex 53398 Phone Number: +52 55 5263 6500 | Bose Limited (H.K.), 7F., No. 2, Sec. 3, Minsheng E. Road, Zhongshan Dist., Taipei City 104511, Phone Number: +886-2-2514 7676 | Bose Limited, 16 Dufour's Place, London W1F 7SP

Input Rating: 100 – 240V ∿ 50/60Hz, 240W

The CMIIT ID is located on the label on the bottom of the product.

Please complete and retain for your records

The serial and model numbers are located on the label on the bottom of the product.

Serial number: _____

Model number: 437308

Please keep your receipt with your owner's guide. Now is a good time to register your Bose product. You can easily do this by going to worldwide.Bose.com/ProductRegistration

Security Information

This product is capable of receiving automatic security updates from Bose. To receive automatic security updates, you must complete the product setup process in the Bose app and connect the product to the Internet. **If you do not complete the setup process, you will be responsible for installing security updates that Bose makes available.**

Amazon, Alexa, Amazon Music, and all related logos are trademarks of Amazon.com, Inc. or its affiliates.

Apple, the Apple logo, Apple Music, and AirPlay are trademarks of Apple Inc., registered in the U.S. and other countries.

Use of the Works with Apple AirPlay badge means that an accessory has been designed to work specifically with the technology identified in the badge and has been certified by the developer to meet Apple performance standards.

The *Bluetooth*® word mark and logos are registered trademarks owned by Bluetooth SIG, Inc. and any use of such marks by Bose Corporation is under license.

Google, Google Cast, and Google Play are trademarks of Google LLC.

This product contains the iHeartRadio service. iHeartRadio is a registered trademark of iHeartMedia, Inc.

This product is protected by certain intellectual property rights of Microsoft. Use or distribution of such technology outside of this product is prohibited without a license from Microsoft.

Pandora is a trademark or registered trademark of Pandora Media, Inc. used with permission.

This product incorporates Spotify software which is subject to third-party licenses found here: www.spotify.com/connect/third-party-licenses

Spotify is a registered trademark of Spotify AB.

USB Type-C® and USB-C® are registered trademarks of USB Implementers Forum.

Wi-Fi is a registered trademark of Wi-Fi Alliance®.

Bose, Bose Bass Module, Bose Music Amplifier, the B logo, Bose Noise Cancelling Headphones, QuietComfort, SimpleSync, SoundLink, SoundLink Revolve, and Virtually Invisible are trademarks of Bose Corporation.

Bose Corporation Headquarters: 1-877-230-5639

©2026 Bose Corporation. No part of this work may be reproduced, modified, distributed, or otherwise used without prior written permission.

LICENSE DISCLOSURES

To view the license disclosures that apply to the third-party software packages included as components of your Bose Music Amplifier product:

1. On the amplifier, press and hold the *Bluetooth* button ᛒ and Reset button for 15 seconds.
2. Connect a USB cable to the SERVICE connector on the back of the amplifier.
3. Connect the other end of the cable to a computer.
4. On the computer, enter **http://203.0.113.1/opensource** in a browser window to display the EULA and license disclosure.

WHAT'S IN THE BOX

Contents 13

AMPLIFIER PLACEMENT

Recommendations 14

SPEAKER CONNECTION GUIDELINES

Speaker wire length recommendations 15

CONNECT SPEAKERS 16

POWER

Connect the amplifier to power 19

Network standby 19

BOSE APP SETUP

Download the Bose app 20

EXISTING BOSE APP USERS

Add the Main amplifier to an existing account 21

Connect to a different Wi-Fi® network 21

MAIN AND SUPPLEMENTAL AMPLIFIERS

Use case 1 22

Use case 2 23

Use case 3 23

CONNECT THE MAIN AMPLIFIER

Connect using the Bose app 24

Connect using an Ethernet cable 24

Connect an additional Main amplifier 24

CONNECT A SUPPLEMENTAL AMPLIFIER

Connect to the Main amplifier 25

Connect an additional Supplemental amplifier 25

AMPLIFIER PORTS 26

AMPLIFIER AND SPEAKER SETTINGS

Amplifier settings 27

Speaker settings 29

WORK WITH YOUR VOICE ASSISTANT

Google Assistant 30

Amazon Alexa 30

STREAM AUDIO WITH GOOGLE CAST™ 31

STREAM AUDIO WITH AIRPLAY

Stream audio from the Control Center 32

Stream audio from an app 32

PRESET PERSONALIZATION

Set a preset 33

Play a preset 33

BLUETOOTH® CONNECTIONS

Connect your mobile device 34

Disconnect a mobile device 35

Reconnect a mobile device 35

Connect an additional mobile device 35

Clear the amplifier device list 35

AMPLIFIER STATUS

Bluetooth and error status 36

Wi-Fi and power status 37

Main amplifier 37

Supplemental amplifier 37

Update, reset, and error status 38

ADVANCED FEATURES

Disable/Enable Wi-Fi capability 39

Overload protection 39

CONNECT BOSE PRODUCTS

Connect a Bose Bass Module 40

Connect a Bose SoundLink *Bluetooth* speaker or Bose headphones using SimpleSync™ technology 41

Benefits 41

Compatible products 41

Connect using the Bose app 42

Reconnect a Bose SoundLink *Bluetooth* speaker or Bose headphones 42

CARE AND MAINTENANCE

Update the amplifier 43

Main amplifier 43

Supplemental amplifier 43

Clean the amplifier 43

Replacement parts and accessories 43

Limited warranty 43

TECHNICAL INFORMATION 44

TROUBLESHOOTING

Try these solutions first 45
Other solutions 45
Reset the amplifier 51
Restore the amplifier to factory default 51

APPENDIX A: RACK MOUNTING

Connect the brackets 52
Attach to the rack 53
Place the amplifier 55

APPENDIX B: WALL MOUNTING

Hardware specifications 56
Attach the mounting bracket 57
Attach the amplifier 60

APPENDIX C: CONNECT EXTERNAL SOURCE

Using an RCA audio cable 61
Using an optical cable 61

CONTENTS

Confirm that the following parts are included:

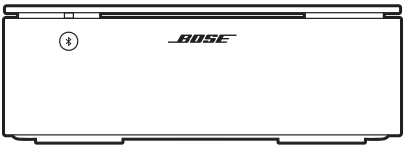

Bose Music Amplifier

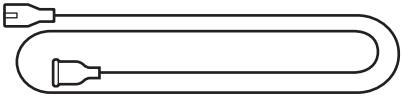

Power cord*

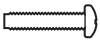

Rack screws for rack mounting (3)

Connecting screws for rack mounting (3)

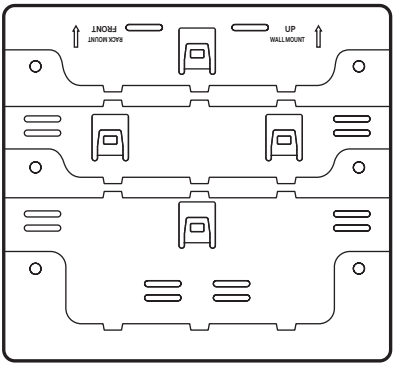

Mounting bracket

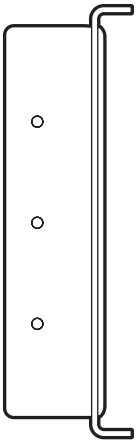

Rack bracket

* May ship with multiple power cords. Use the power cord for your region.

NOTE: If part of the amplifier is damaged, don't use it. Contact your authorized Bose dealer or Bose customer service.

Visit: support.Bose.com/BMA

RECOMMENDATIONS

- Install the amplifier indoors.
- Make sure there is an AC (mains) outlet nearby.
- To avoid interference, keep other wireless equipment 1 – 3 ft (0.3 – 0.9 m) away from the amplifier.
- For optimum performance, place the amplifier in a well-ventilated area.
- Place the amplifier on a shelf, or mount it on a rack or wall.
- When mounting on a rack, make sure the rack mount arrow and four tabs are facing the front of the rack (see page 55).
- When mounting multiple amplifiers on a rack, use a separate rack mount for each amplifier.
- When mounting on a wall, make sure the wall mount arrow and four tabs are facing up (see page 57).

CAUTIONS:

- Place the amplifier in an area where the maximum ambient temperature is less than 104°F (40°C).
- Keep the back side of the amplifier at least 3 – 6 in (7.62 – 15.24 cm) away from any other surface. Do not block airflow from the back of the amplifier.
- Do NOT place the amplifier in a completely enclosed area. Doing so may result in poor performance.

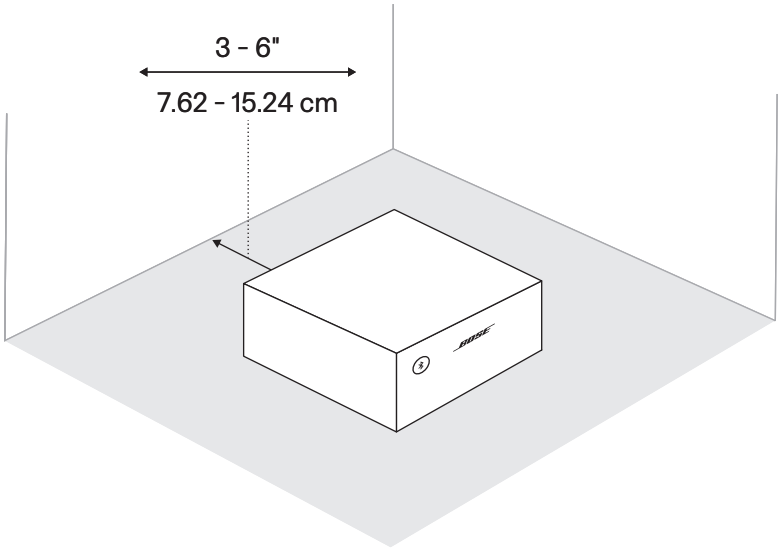

- One pair of speakers requires 4 ohm minimum each.
- Two pairs of speakers require 8 ohm minimum each.

CAUTION: Use only unpowered speakers. Do NOT connect any make or model of powered speakers. Doing so may cause damage to the equipment.

SPEAKER WIRE LENGTH RECOMMENDATIONS

MAXIMUM LENGTH	GAUGE
30 ft (9 m)	18 (0.82 mm^2)
45 ft (14 m)	16 (1.3 mm^2)
70 ft (21 m)	14 (2.0 mm^2)

Before connecting your speakers, place your speakers in their permanent location and make sure the amplifier is unplugged from an AC (mains) power outlet.

Speaker wires consist of two insulated wires:

- The marked wire (stripes, ribbing, or color) connects to the positive (**+**) terminal.
- The plain wire connects to the negative (**–**) terminal.

1. Remove terminal block A from the **SPEAKERS OUT** port.

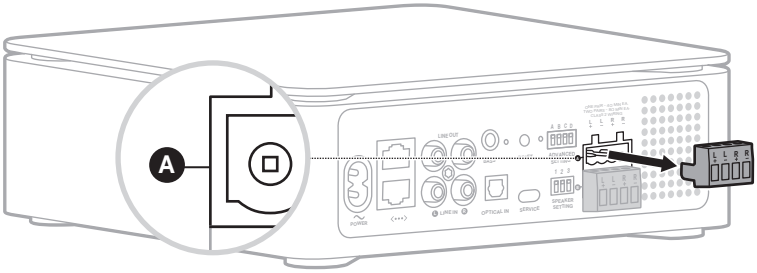

2. Connect the speaker wires to terminal block A.

   a. Insert the left speaker's marked wire into the **L+** positive terminal and the plain wire into the **L-** negative terminal.

   b. Insert the right speaker's marked wire into the **R+** positive terminal and the plain wire into the **R-** negative terminal.

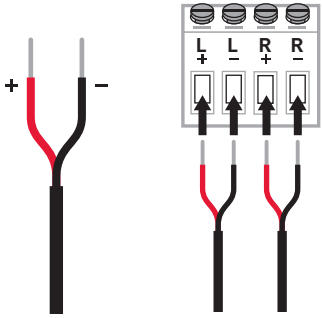

3. Using a small, flat-head screwdriver, tighten the screws on the terminals clockwise to secure the wires.

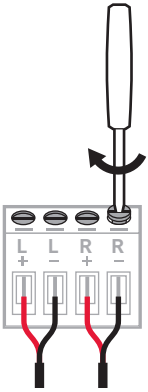

4. Reinsert terminal block A into the **SPEAKERS OUT** port.

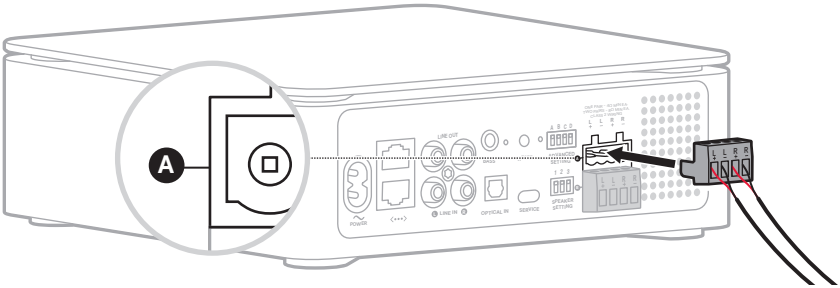

5. Connect the other end of the speaker wires to your speakers.

   For instructions, refer to the online owner's guide for your speaker.

   NOTE: Use a silicone caulking material such as RTV adhesive (available at your local hardware store) to protect the wiring at any outdoor speaker connections.

Connect additional speakers

You can connect up to two pairs of speakers to the amplifier for fuller sound.

To connect a second pair of speakers, repeat steps in “Connect Speakers” on page 16, using terminal block B.

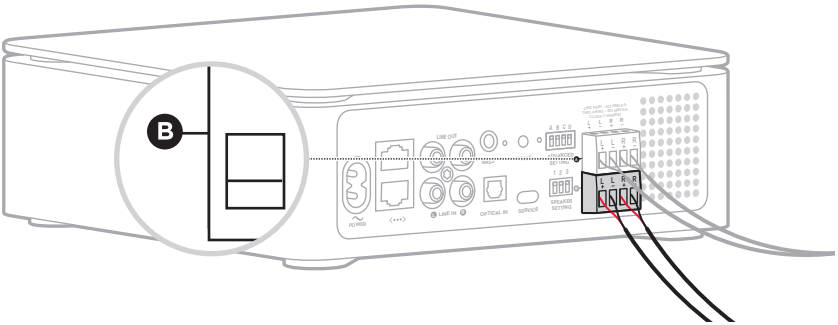

NOTE: For best sound quality and balanced volume, when connecting two pairs of speakers, they should be the same speaker model since the same EQ setting will be applied to both pairs of speakers.

CONNECT THE AMPLIFIER TO POWER

1. Connect the power cord to the **POWER** port on the back of the amplifier.
2. Plug the other end of the power cord into an AC (mains) power outlet.

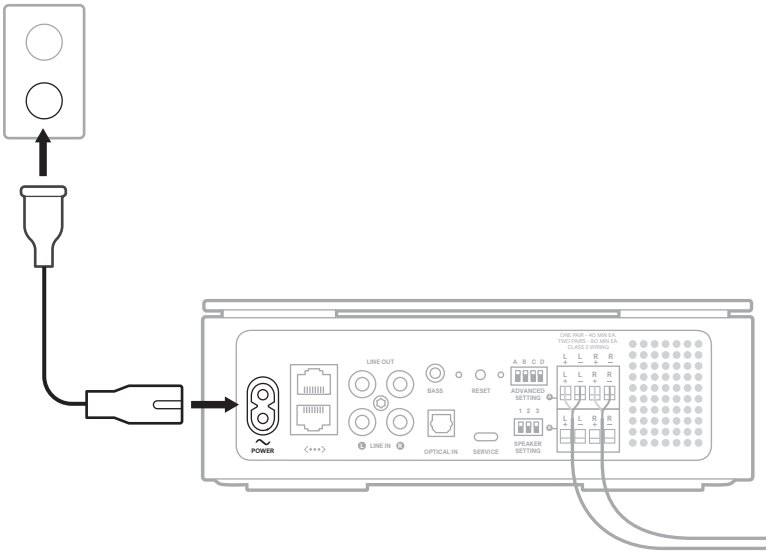

The light on the back of the amplifier slowly blinks amber.

NOTES:

- If the amplifier has been set up and is set to Main (default), the light on the back of the amplifier glows solid white.
- If the amplifier has been set up and is set to Supplemental, the light on the back of the amplifier glows solid green.

NETWORK STANDBY

The amplifier transitions to network standby when audio has stopped and you have not pressed any buttons for 20 minutes. To wake the amplifier from network standby, play or resume audio using the Bose app on your mobile device or reconnect a *Bluetooth* source.

The Bose app lets you set up and control the Main amplifier (see page 22) from any mobile device, such as a smartphone or tablet.

Using the app, you can stream music, add music services, explore internet radio stations, set and change presets, work with your voice assistant, manage Main amplifier settings, and get updates and new features.

NOTE: If you have already created a Bose account for another Bose product, add the amplifier to your existing account (see page 21).

DOWNLOAD THE BOSE APP

1. On your mobile device, download the Bose app.

Download on the App Store

GET IT ON Google Play

2. Follow the app instructions to set up the amplifier.

ADD THE MAIN AMPLIFIER TO AN EXISTING ACCOUNT

To add your Bose Music Amplifier, open the Bose app and add your amplifier.

NOTES:

- You can only add a Main amplifier using the Bose app. Supplemental amplifiers don't display on your network or in the Bose app.
- To play the same audio on multiple speakers simultaneously, you can group Main amplifiers together using the Bose app. You can access this option from the main page. For more information, visit: support.Bose.com/BMAGrouping

CONNECT TO A DIFFERENT WI-FI NETWORK

Connect to a different network if your network name or password has changed, or if you want to change or add another network.

1. Press and hold the Reset button for 5 seconds until the light on the back of the amplifier slowly blinks amber.

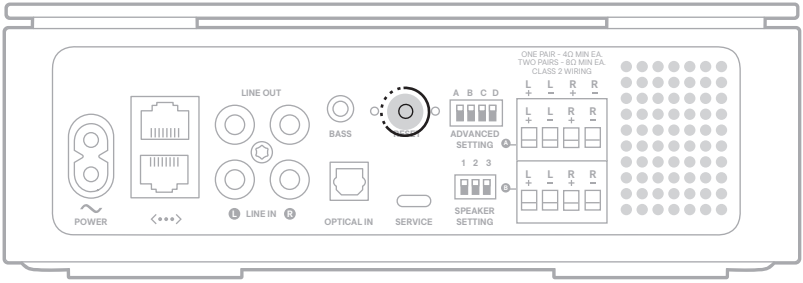

2. On your mobile device, open your Wi-Fi settings.
3. Select **Bose Music Amplifier**.
4. Open the Bose app and follow the app instructions.

The amplifier can power up to two pairs of speakers. It can be set as the Main amplifier (default) or as a Supplemental amplifier (see page 27).

The Main amplifier connects to your network using a Wi-Fi connection or Ethernet cable (not provided). It can be controlled using the Bose app, your mobile device, or your voice assistant-enabled device connected to your network.

A Supplemental amplifier connects to the Main amplifier using an RCA audio cable and receives audio output from the Main amplifier. Supplemental amplifiers play the same audio as the Main amplifier, but don't display on your network, the Bose app, or your mobile device and can only play audio from the **LINE IN** port.

You can connect up to four Supplemental amplifiers to the Main amplifier for best sound quality. The amplifiers can be configured depending on the location or size of your environment, how many speakers you want to power, or where you want your audio to play.

NOTES:

- For best sound quality and balanced volume, when connecting a Supplemental amplifier to the Main amplifier, you should use the same speaker model and number of speakers per amplifier.
- Depending on your environment, it's possible to connect more than four Supplemental amplifiers to the Main amplifier without affecting performance.

USE CASE 1

Control up to two pairs of speakers in the same space, where the speakers play the same audio with little to no delay.

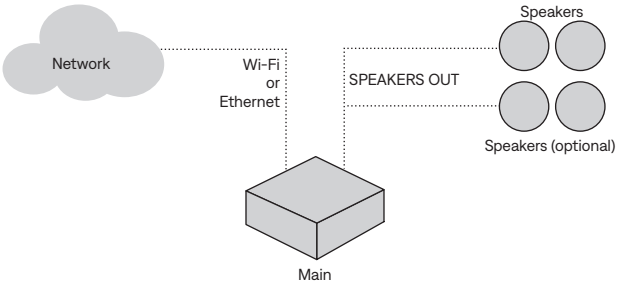

USE CASE 2

Control multiple pairs of speakers in a larger space, where all speakers power on and off simultaneously and play the same audio with little to no delay.

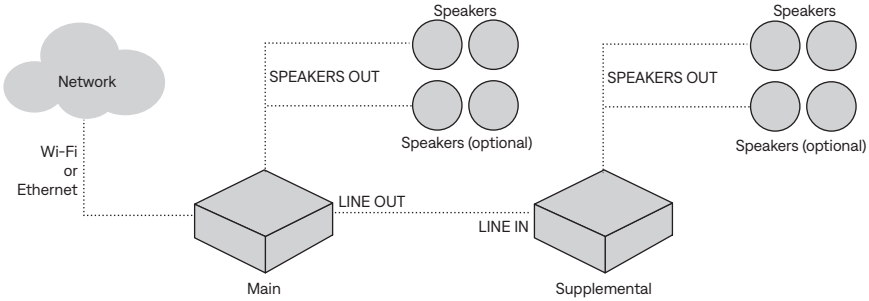

USE CASE 3

Control multiple systems (amplifier and speakers) independently, where each system plays different audio.

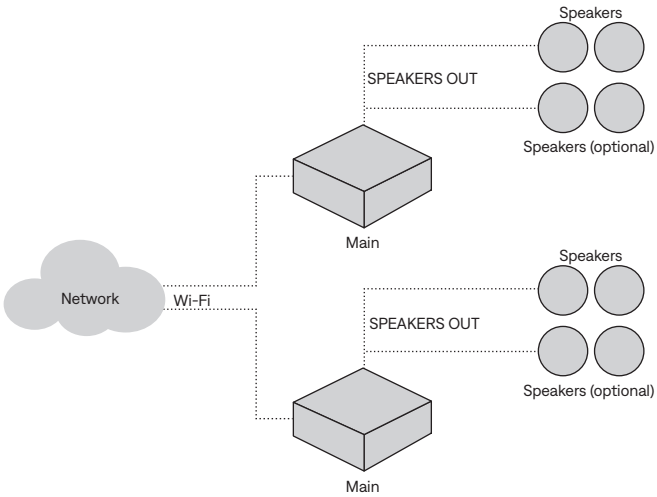

NOTES:

- Main amplifiers can also be connected to your network using an Ethernet cable (see page 24).
- For best sound quality and balanced volume, when connecting multiple pairs of speakers, they should be the same speaker model since the same EQ setting will be applied to the speakers.
- To play the same audio on all speakers simultaneously, for best sound quality group the Main amplifiers together using the Bose app. You can access this option from the main page. For more information, visit: support.Bose.com/BMAGrouping

You connect the Main amplifier to your network using the Bose app or an Ethernet cable (not provided).

CONNECT USING THE BOSE APP

To connect the Main amplifier to your network using the Bose app, see page 20.

CONNECT USING AN ETHERNET CABLE

NOTE: If you connect to your network using an Ethernet cable without finishing setup using the Bose app, you will only be able to play audio from a *Bluetooth* source.

1. On your router, connect one end of an Ethernet cable to an Ethernet port.
2. On the Main amplifier, connect the other end of the cable to an Ethernet port.

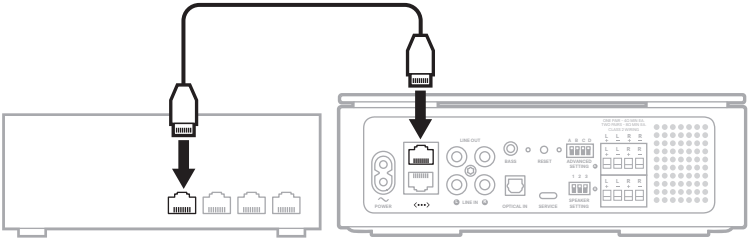

Connect an additional Main amplifier

You can connect an additional Main amplifier directly to the router (see “Connect using an Ethernet cable”) or directly to the initial Main amplifier.

1. On the Main amplifier, connect one end of an Ethernet cable to an Ethernet port.
2. On the additional Main amplifier, connect the other end of the cable to an Ethernet port.

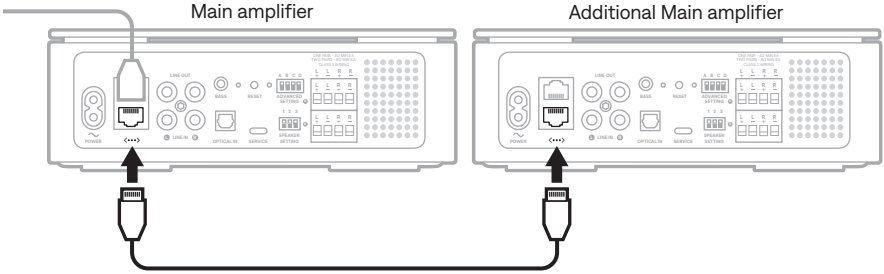

You connect a Supplemental amplifier to the Main amplifier or to another Supplemental amplifier using an RCA audio cable (not provided).

NOTE: You can connect up to four Supplemental amplifiers to the Main amplifier for best sound quality. Depending on your environment, it's possible to connect additional amplifiers without affecting performance.

CONNECT TO THE MAIN AMPLIFIER

1. On the Main amplifier, connect the audio cable's white connector to the white **LINE OUT** port and the red connector to the red **LINE OUT** port.

2. On the Supplemental amplifier, connect the other white connector to the white **LINE IN** port and the red connector to the **LINE IN** port.

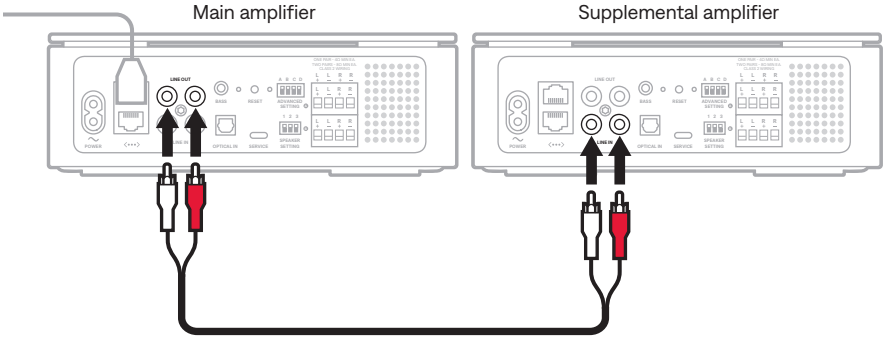

Connect an additional Supplemental amplifier

1. On the Supplemental amplifier, connect the audio cable's white connector to the white **LINE OUT** port and the red connector to the red **LINE OUT** port.

2. On the additional Supplemental amplifier, connect the other white connector to the white **LINE IN** port and the red connector to the **LINE IN** port.

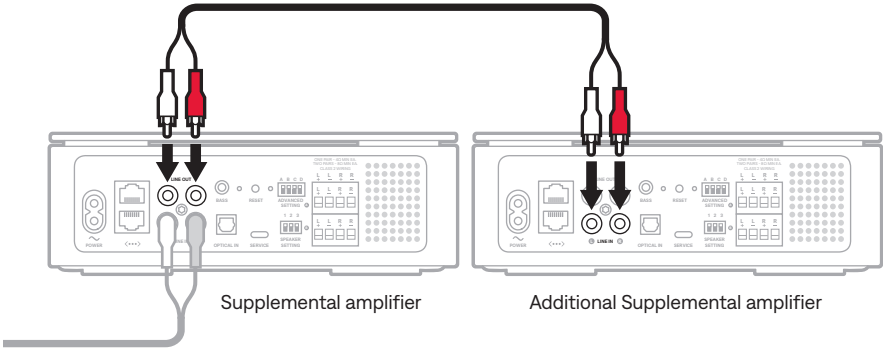

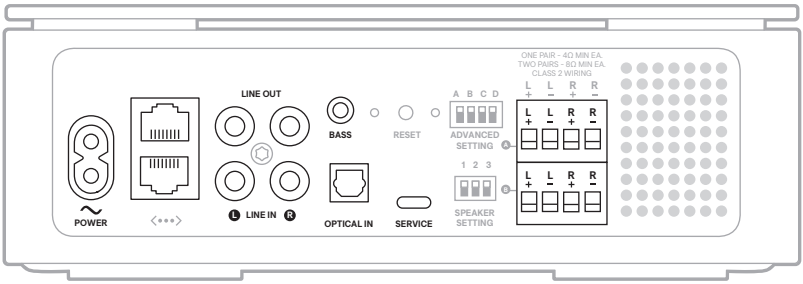

PORT	DESCRIPTION
POWER	Applies power when the AC power cord is inserted into the port and then plugged into an AC (mains) outlet (see page 19).
<•••>	Enables you to connect the Main amplifier to your network or to connect multiple Main amplifiers together using an Ethernet cable (not provided). See page 24.
LINE OUT **LINE IN**	Enables you to connect a Supplemental amplifier or an external source using a RCA audio cable (not provided). See page 61.
BASS	Enables you to connect a Bose Bass Module using a 3.5 mm stereo audio cable (not provided). See page 40.
OPTICAL IN	Enables you to play digital audio from an external source using an optical cable (not provided). See page 61.
SERVICE	USB Type-C® port for service.
SPEAKERS OUT	Enables you to connect up to two pairs of speakers (see page 18).

AMPLIFIER SETTINGS

The **ADVANCED SETTING** switches are configured depending on how you want to hear your audio. To configure the amplifier, flip the appropriate **ADVANCED SETTING** switch(es) down.

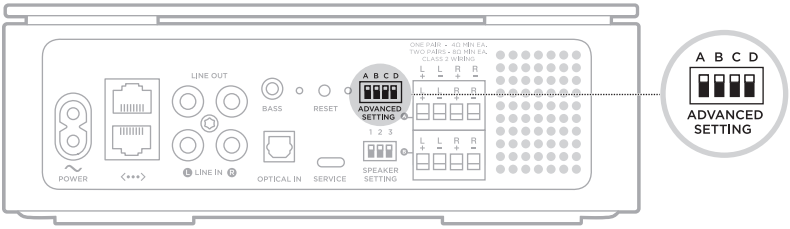

MODE	SWITCH	POSITION	DESCRIPTION
Main	A – Up	A B C D	Set the amplifier to Main. **NOTE:** Main amplifiers can be connected to your network using the Bose app or an Ethernet cable (not provided). See page 24.
Supplemental	A – Down	A B C D	Set the amplifier to Supplemental. **NOTES:** • Supplemental amplifiers connect to the Main amplifier (or another Supplemental amplifier) using an RCA audio cable and play audio from the Main amplifier on the **LINE IN** port. • Supplemental amplifiers can't connect to your network and don't display in the Bose app.
N/A	B	A B C D	Reserved for future use.
Stereo	C – Up	A B C D	Set the audio output to Stereo.
Mono	C – Down	A B C D	Set the audio output to Mono. **NOTE:** Mono is best when speakers are far apart.

MODE	SWITCH	POSITION	DESCRIPTION
Line out: variable volume	D – Up		Control the volume using the Bose app. **NOTE:** This setting applies to the Main amplifier **LINE OUT** audio and is heard through the Supplemental amplifier.
Line out: fixed volume	D – Down		Control the volume using the connected device with volume control. **NOTES:** • When the volume is fixed, you can't control the volume using the Bose app. • This setting applies to the Main amplifier.

NOTES:

- The default position for all switches is up.
- Each switch can be configured independently.
- If an **ADVANCED SETTING** switch is flipped while the amplifier is powered on, the amplifier will reset.

SPEAKER SETTINGS

You can apply a customized EQ setting to the Bose 251 Environmental Speakers or Bose Virtually Invisible 791 speakers. For all other speakers, the default EQ setting is used.

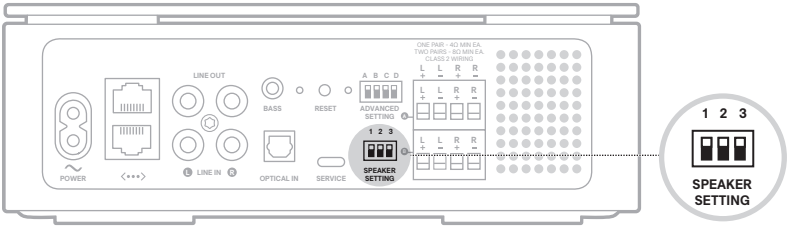

To apply the customized EQ setting to your Bose 251 Environmental Speakers or Bose Virtually Invisible 791 speakers, flip the appropriate **SPEAKER SETTING** switch down. To apply the default EQ setting to all other speakers, leave all switches up.

PRODUCT	SWITCH			POSITION
Bose 251 Environmental Speakers	1 – Down	2 – Up	3 – Up	1 2 3
Bose Virtually Invisible 791 speakers	1 – Up	2 – Down	3 – Up	1 2 3
All other speakers	1 – Up	2 – Up	3 – Up	1 2 3

NOTE:

- The default position for all switches is up.
- If any combination other than what is shown in the table above is used, the default EQ setting is used.

GOOGLE ASSISTANT

The amplifier is compatible with a Google Assistant-enabled device connected to your network. Control the amplifier using just your voice with Google.

Start with saying “Hey Google,” then say your request on <amplifier name>.
For example, try playing your favorite music. Just say “Hey Google, play My Workout playlist on Family Room.”

NOTES:

- Make sure you say the amplifier name you assigned in the Bose app. If multiple amplifiers have the same name, use the name assigned in the Google Assistant app or change the name in the Bose app.
- Google Assistant isn’t available in all languages and countries.
- For more information on what Google Assistant can do, visit: https://support.google.com/assistant

AMAZON ALEXA

If you have a separate device with Alexa Built-In connected to your network, you can control the amplifier from that device with voice commands. To set up voice control, enable the skill and link your Alexa account to your Bose account. Then just ask Alexa to play music.

Start with “Alexa,” then say your request on <amplifier name>. For example, try playing your favorite music. Just say, “Alexa, play My Workout playlist on Family Room.”

NOTES:

- Make sure you say the amplifier name you assigned in the Bose app. If multiple amplifiers have the same name, use the name assigned in the Alexa app or change the name in the Bose app.
- Alexa isn’t available in all languages and countries.
- For more information about what Alexa can do, visit: https://www.amazon.com/usealexa

The amplifier works with Google Cast. With Google Cast, you can stream audio from supported apps by simply tapping the Cast button.

NOTES:

- To use Google Cast, you must have a Wi-Fi connection.
- Support for new apps is added periodically.

Your phone is your remote

- Simply tap the Cast button from apps you already know and love. No new logins or downloads required.
- Use your phone to search, play, pause, and turn up the volume from anywhere in the home.
- While you're streaming, you can keep using your phone for other things – scroll through social media, send a text, and even accept calls.
- Enjoy music throughout your house when you use multi-room casting with Cast-compatible speakers.

Unlimited entertainment, all on your schedule

Choose from millions of songs from popular music services like Pandora, Spotify, and TuneIn.

To enable Google Cast, use the Bose app. You can access this option from the Settings menu.

The amplifier is capable of playing AirPlay 2 audio, which allows you to quickly stream audio from your Apple device to the amplifier.

NOTES:

- To use AirPlay 2, you need an Apple device running iOS 11.4 or later.
- Your Apple device and amplifier must be connected to the same Wi-Fi network.
- For more information about AirPlay, visit: https://www.apple.com/airplay

STREAM AUDIO FROM THE CONTROL CENTER

1. On your Apple device, open the Control Center.
2. Tap and hold the audio card in the top-right corner of the screen, then tap the AirPlay icon .
3. Select your amplifier.

STREAM AUDIO FROM AN APP

1. Open a music app (like Apple Music), and select a track to play.
2. Tap .
3. Select your amplifier.

You can personalize six presets to your favorite streaming music services, stations, playlists, artists, albums, or songs from your music library. You can access your music, at any time, with a simple touch of a button in the Bose app.

NOTE: You can't set presets when your source is a *Bluetooth* connection.

SET A PRESET

1. Stream music using the app.
2. While the music is playing, press and hold a preset in the app.

PLAY A PRESET

Once you personalize your presets, press a preset in the Bose app.

CONNECT YOUR MOBILE DEVICE

1. Press the *Bluetooth* button ⦚ on the front of the Main amplifier.

The light on the front of the amplifier slowly blinks blue.

2. On your mobile device, turn on the *Bluetooth* feature.

NOTE: The *Bluetooth* menu is usually found in the Settings menu.

3. Select your amplifier from the device list.

NOTE: Look for the name you entered for your amplifier in the Bose app. If you didn't name your amplifier, the default name appears.

Once connected, the light on the front of the amplifier glows solid blue then fades to black. The amplifier's name appears in the mobile device list.

DISCONNECT A MOBILE DEVICE

Use the Bose app to disconnect your mobile device.

TIP: You can also use *Bluetooth* settings on your mobile device. Disabling the *Bluetooth* feature disconnects all other devices.

RECONNECT A MOBILE DEVICE

Press the *Bluetooth* button ⱷ.

The amplifier tries to connect with the most recently-connected devices.

NOTES:

- Make sure the *Bluetooth* feature is enabled on your mobile device.
- The device must be within 30 ft (9 m) and powered on.

CONNECT AN ADDITIONAL MOBILE DEVICE

You can store up to eight devices in the amplifier device list.

NOTE: You can play audio from only one device at a time.

1. Press and hold ⱷ until the light on the front of the amplifier slowly blinks blue.
2. On your mobile device, select your amplifier from the device list.

   NOTE: Make sure the *Bluetooth* feature is enabled on your mobile device.

CLEAR THE AMPLIFIER DEVICE LIST

1. Press and hold ⱷ for 10 seconds until the light on the front of the amplifier blinks blue 3 times.
2. Delete the amplifier from the *Bluetooth* list on your device.

All devices are cleared. The amplifier is ready to connect (see page 34).

BLUETOOTH AND ERROR STATUS

The light on the front of the amplifier shows the *Bluetooth* connection status of a mobile device and error alerts.

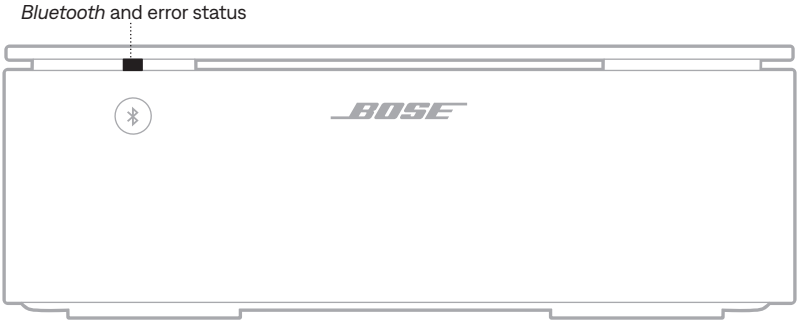

LIGHT ACTIVITY	SYSTEM STATE
Slowly blinking blue	Ready to connect to mobile device
Blinking blue	Connecting to mobile device
Solid blue then fades to black	Connected to mobile device
Blinks blue 3 times	Cleared device list
Blinks blue and red for 3 seconds	*Bluetooth* connection is disabled (Supplemental)
Solid red	Critical error (hardware) – contact Bose customer service **NOTE:** The lights on the front and the back of the amplifier glow solid red simultaneously.

The light on the back of the amplifier shows Wi-Fi, power, and system status.

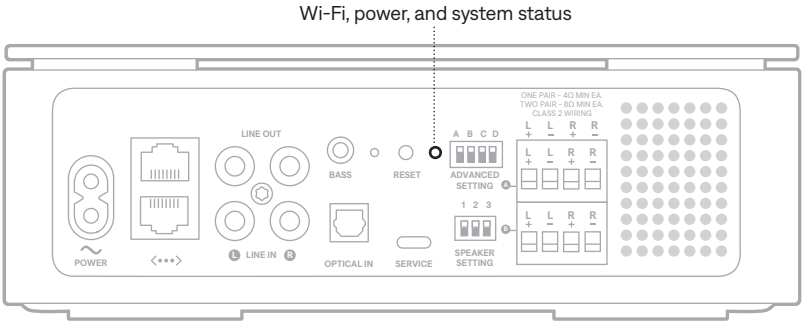

WI-FI AND POWER STATUS

Main amplifier

Shows the Wi-Fi and power status of a Main amplifier.

LIGHT ACTIVITY	SYSTEM STATE
Slowly blinking white	Powering on
Solid white	Powered on
Slowly blinking amber	Ready for Wi-Fi setup
Solid amber	Wi-Fi setup in progress
Slowly blinking white	Connecting to Wi-Fi
Solid white	Connected to Wi-Fi

Supplemental amplifier

Shows the power status of a Supplemental amplifier.

LIGHT ACTIVITY	SYSTEM STATE
Slowly blinking green	Powering on
Solid green	Powered on

UPDATE, RESET, AND ERROR STATUS

Shows the status of software updates, resets, and error alerts.

LIGHT ACTIVITY	SYSTEM STATE
Blinking white	Installing update
Solid white	Update complete
Blinks red 3 times	Reset complete
Solid amber	Wi-Fi error (Main) – contact Bose customer service
Blinks amber 4 times	Non-critical error (network connection error or source error)
Solid red	Critical error (hardware) – contact Bose customer service **NOTE:** The lights on the front and the back of the amplifier glow solid red simultaneously.

DISABLE/ENABLE WI-FI CAPABILITY

Insert a thin paperclip into the hole on the back of the amplifier and press and hold for 2 seconds until the light on the back of the amplifier blinks white 3 times.

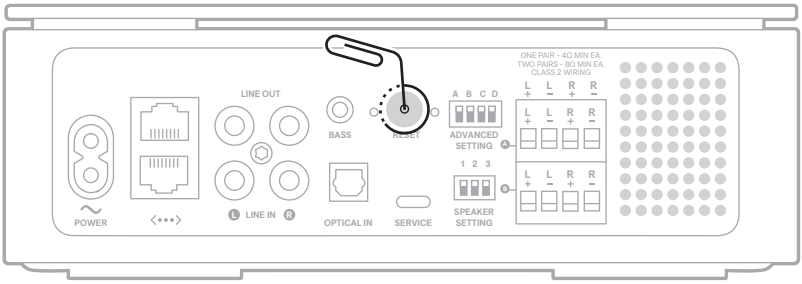

NOTE: Disabling/enabling Wi-Fi capability also disables/enables the *Bluetooth* feature.

OVERLOAD PROTECTION

The amplifier's overload protection feature automatically reduces maximum power output to prevent the amplifier from getting too hot. This may occur when the amplifier plays at high volume for a long duration or if it is installed in a location with limited ventilation. Full maximum output automatically returns as the amplifier cools down.

CONNECT A BOSE BASS MODULE

You can connect your Bose Bass Module to the amplifier using a 3.5 mm stereo audio cable (not provided).

NOTES:

- The 3.5 mm audio cable must be stereo and shielded.
- If you don't have a 3.5 mm audio cable, visit Bose.com/BM500 or Bose.com/BM700 to purchase a 15 ft (4.5 m) cable. You can also purchase this part at your local electronics store.

1. On the amplifier, connect one end of a 3.5 mm audio cable to the **BASS** port.
2. Connect the other end of the cable to the **BASS IN** port on the bass module.

Bose Bass Module 500

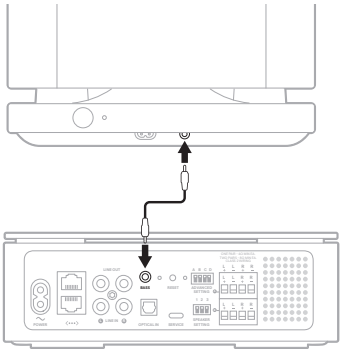

Bose Bass Module 700

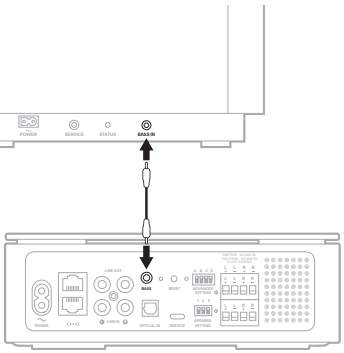

NOTE: For more information about your bass module, refer to your bass module owner's guide. Visit:

Bose Bass Module 700: Bose.com/BM700

Bose Bass Module 500: Bose.com/BM500

CONNECT A BOSE SOUNDLINK *BLUETOOTH* SPEAKER OR BOSE HEADPHONES USING SIMPLESYNC™ TECHNOLOGY

With Bose SimpleSync™ technology, you can connect certain Bose SoundLink *Bluetooth* speakers or Bose headphones to the amplifier for a new way to hear your music and movies.

Benefits

A personal listening experience: Listen to your TV or music without disturbing others by connecting your Bose headphones to the amplifier. Use independent volume controls on each product to lower or mute the amplifier while keeping your headphones as loud as you like.

Another room of audio: Listen to the same song in two different rooms at the same time by connecting your Bose SoundLink *Bluetooth* speaker to the amplifier.

NOTES:

- SimpleSync™ technology has a *Bluetooth* range of up to 30 ft (9 m). Walls and construction materials can affect reception. Depending on your environment, the range may be higher.
- You can't stream audio using a *Bluetooth* source when using SimpleSync™ technology.

Compatible products

You can connect most Bose SoundLink *Bluetooth* speakers to the amplifier, as well as Bose headphones.

Popular compatible products include:

- Bose SoundLink Revolve+ *Bluetooth* speaker
- Bose SoundLink Mini *Bluetooth* speaker
- Bose SoundLink Color *Bluetooth* speaker
- Bose Noise Cancelling Headphones 700
- Bose QuietComfort 35 wireless headphones

New products are added periodically. For a complete list and more information, visit: worldwide.Bose.com/Support/Groups

Connect using the Bose app

To connect your Bose SoundLink *Bluetooth* speaker or Bose headphones to the amplifier, use the Bose app. For more information, visit: support.Bose.com/BMAGrouping

NOTES:

- Make sure that the product you're connecting is powered on, within 30 ft (9 m) of the amplifier, and ready to connect to another device. For more information, refer to your product owner's guide.
- You can connect only one product at a time to the amplifier.

RECONNECT A BOSE SOUNDLINK *BLUETOOTH* SPEAKER OR BOSE HEADPHONES

Use the Bose app to reconnect the amplifier to a previously-connected compatible Bose product.

For more information, visit: support.Bose.com/BMAGrouping

NOTE: The amplifier must be within range (30 ft or 9 m) and powered on.

UPDATE THE AMPLIFIER

Main amplifier

After you complete the setup process in the Bose app and connect the Main amplifier to your Wi-Fi network, the amplifier updates automatically.

Supplemental amplifier

1. Flip switch A up to set it to a Main amplifier.
2. Add the amplifier to the Bose app (see page 24).

   The amplifier updates automatically. When the update is complete, the light on the back of the amplifier glows solid white.
3. Flip switch A down to revert it back to a Supplemental amplifier.

CLEAN THE AMPLIFIER

Clean the surface of the amplifier with a soft, dry cloth.

Use a brush attachment on a vacuum cleaner to clean the hard-to-reach areas.

CAUTIONS:

- Disconnect the power cord from the AC (mains) power outlet before cleaning.
- Do NOT use any sprays near the amplifier. Do not use any solvents, chemicals, or cleaning solutions containing alcohol, ammonia or abrasives.
- Do NOT allow liquids to spill into any openings.

REPLACEMENT PARTS AND ACCESSORIES

Replacement parts and accessories can be ordered through Bose customer service.

Visit: support.Bose.com/BMA

LIMITED WARRANTY

The amplifier is covered by a limited warranty. Visit our website at worldwide.Bose.com/Warranty for details of the limited warranty.

To register your product, visit worldwide.Bose.com/ProductRegistration for instructions. Failure to register will not affect your limited warranty rights.

SPECIFICATION	VALUE
Dimensions (approximate)	8 ¼" wide x 8 ¼" deep x 2 ⁹⁄₁₀" high (21 cm x 21 cm x 7.3 cm)
Weight (amplifier only)	4.8 lbs (2186g)
Power rating	100-240V∿ 50/60 Hz, 240W
Input sensitivity	RCA inputs: 2Vrms
Signal to Noise ratio (S/N)	>100 dB
Output power (continuous average)	125W / channel minimum into 8 ohms, from 20 Hz to 20 kHz, with no more than 0.1% THD
Temperature range	32° F to 95° F (0° C to 35° C) **NOTE:** Depending on your environment, it's possible to operate outside of the recommended temperature range without affecting performance.

TRY THESE SOLUTIONS FIRST

If you experience problems with the amplifier:

- Make sure the amplifier is connected to a live AC (mains) outlet.
- Secure all cables and speaker wires.
- Check the state of the amplifier (see page 36).
- Move the amplifier and mobile device away from possible interference (wireless routers, cordless phones, televisions, microwaves, etc.).
- Move the amplifier within the recommended range of your wireless router or mobile device for proper operation.
- Refer to your speaker owner's guide.

OTHER SOLUTIONS

If you could not resolve your issue, see the table below to identify symptoms and solutions to common problems. If you're unable to resolve your issue, contact Bose customer service.

Visit: worldwide.Bose.com/contact

SYMPTOM	SOLUTION
Can't complete network setup	Make sure the amplifier is set to Main (see page 27). Select correct network name and enter password. Connect your mobile device and amplifier to the same Wi-Fi network. Enable Wi-Fi on the mobile device you're using for setup. Change the default browser on your mobile device. Close other open applications. Restart your mobile device and router. Place the amplifier within range of the router. Reset the amplifier (see page 51). If your router supports both 2.4GHz and 5GHz bands, make sure both the mobile device and amplifier are connecting to the same band. Uninstall the Bose app, reset the amplifier (see page 51), and restart setup.

SYMPTOM	SOLUTION
Can't connect to network	Make sure the amplifier is set to Main (see page 27). If the amplifier set to Main and a device is connected to an Ethernet port, make sure it's another Bose Music Amplifier. In the Bose app, select the correct network name, and enter the network password (case-sensitive). Make sure the amplifier and your mobile device are connected to the same Wi-Fi network. Enable Wi-Fi on the mobile device you're using for setup. Close other open applications on your mobile device. If multiple amplifiers are connected by cable, reduce the number connected. Connect the Main amplifier to the network using an Ethernet cable (see page 24). If connected to your network using an Ethernet cable: • Check the cable (see page 24). • Use a different Ethernet cable (see page 24). If your network information has changed, see page 21. Restart your mobile device and router. If your router supports both 2.4GHz and 5GHz bands, make sure both the device (mobile or computer) and amplifier are connecting to the same band. **NOTE:** Give each band a unique name to make sure you're connecting to the correct band. Reset the router. If connecting to a different network and the app doesn't prompt you for setup, go to the main screen and add the amplifier.
Bose app doesn't work on mobile device	Make sure your mobile device is compatible with the Bose app and meets minimum system requirements. For more information, refer to the app store on your mobile device. Uninstall the Bose app on your mobile device then reinstall the app (see page 20).

SYMPTOM	SOLUTION
Poor or distorted audio	If two pairs of speakers are connected, use the same speaker model. Make sure the speakers are compatible: one pair of speakers requires 4 ohm minimum each, and two pairs of speakers require 8 ohm minimum each. Use the Bose app to group the Main amplifiers (see page 21). If the amplifier is connected to an external source using an RCA audio cable or optical cable, make sure it's set up using the Bose app (see page 20). If connected using an Ethernet cable or RCA audio cable: • Reduce the number of amplifiers connected. • Check the Ethernet cable (see page 24) or RCA audio cable (see page 25). • Use a different Ethernet cable (see page 24) or RCA audio cable (see page 25).
Intermittent or no audio	If the amplifier is set to Main and a device is connected to the Ethernet port, make sure it's another Bose Music Amplifier. Firmly insert the speaker wires into the terminals on the back of the speakers and on the amplifier's connector panel. Confirm that no individual wires are touching across terminals (see page 16). Make sure the external music source is firmly connected to either the analog (red and white) or optical inputs. Stop other audio or video streaming applications. Unmute or increase the volume on the amplifier and mobile device. Unplug the power cord; reconnect after 1 minute. Restart your mobile device and router. Make sure volume isn't muted or too low.
Interference (corrupted audio)	Keep the amplifier away from metal objects, other audio/video components, and direct heat sources (see page 14). Change the router channel or band. Refer to your router owner's guide. Connect the Main amplifier using an Ethernet cable (see page 24).
Speakers don't play	Make sure the speaker wires are connected properly (see page 16). Disconnect AC power from the amplifier for 3 minutes. Reconnect power to the amplifier (see page 19). Play content using the Bose app.

SYMPTOM	SOLUTION
One speaker doesn't play	Make sure the speaker wires are in good condition. Disconnect the wire from the working speaker and attach it to the non-working speaker. If the speaker doesn't play, the problem may be with the speaker and not the speaker wire. Disconnect the speaker wire from the terminal block connector. Connect it to the other terminal block connector. If the speaker plays, the problem may be the other speaker wire. Replace the speaker wire. If the speaker doesn't play, the problem may be in that channel of the amplifier.
Right and left stereo channels are heard on the wrong speakers	Make sure the speaker wires are connected properly (see page 16). Make sure that the red and white analog cables are properly connected, red to red and white to white on the amplifier and on the external music source.
Bass or treble is weak	Make sure the speaker wires are connected properly (see page 16). If they aren't, they could be playing out of phase. Make sure the speakers are compatible: one pair of speakers requires 4 ohm minimum each, and two pairs of speakers require 8 ohm minimum each. Make sure the amplifier software is up-to-date in the Bose app. Adjust the bass or treble level using the Bose app.
Can't connect with your mobile device using a *Bluetooth* connection	Make sure the amplifier is set to Main (see page 27).
Can't play *Bluetooth* audio	On your mobile device, turn the *Bluetooth* feature off and then on. Delete the amplifier from the *Bluetooth* list. Connect again (see page 34). Make sure you're using a compatible *Bluetooth* mobile device. Make sure you're within 30 ft of the amplifier, and there are no large metal obstructions in the way. Delete the amplifier from your mobile device *Bluetooth* list. Connect again (see page 34). Set up the Bose app first and perform all updates. Connect a different mobile device (see page 35). Clear the amplifier's device list (see page 35). Connect again (see page 34).

SYMPTOM	SOLUTION
Can't stream audio using AirPlay	Make sure the amplifier is powered on and in range (see page 19). Make sure your Apple device and the amplifier are connected to the same Wi-Fi network. Update your Apple device. Make sure the amplifier is up-to-date (see page 43). If you can't find the AirPlay icon in the music app you're streaming from, stream audio from the Control Center. For additional support, visit: https://www.apple.com/airplay
Google Assistant doesn't respond	Make sure you have a Google Assistant-enabled device connected to your network. Make sure Google Assistant has been set up using the Bose app (see page 30). **NOTE:** The amplifier must be set up and connected to your Wi-Fi network using the Bose app. Connect your mobile device to Wi-Fi. Make sure you're in a country where Google Assistant is available. Make sure you're using the most up-to-date version of the Google Assistant app. Make sure your mobile device is compatible. Make sure you say the name you assigned in the Bose app. Make sure you use the same audio service account on the Bose app and Google Assistant app. For additional support, visit: https://support.google.com/assistant
Alexa doesn't respond	Make sure you're speaking to a separate device with Alexa Built-In connected to your network. Make sure Alexa has been set up using the Bose app (see page 30). **NOTE:** The amplifier must be set up and connected to your Wi-Fi network using the Bose app. Connect your mobile device to Wi-Fi. Make sure you're in a country where Amazon Alexa is available. Make sure you're using the most up-to-date version of the Alexa app. Make sure your mobile device is compatible. Make sure you say the name you assigned in the Bose app. For additional support, visit: https://www.amazon.com/usealexa

SYMPTOM	SOLUTION
Amplifier doesn't connect to a Bose SoundLink *Bluetooth* speaker or Bose headphones	Make sure that your speaker or headphones are powered on, within 30 ft (9 m) of the amplifier, and ready to connect to another device. For more information, refer to your product owner's guide. Disconnect your speaker or headphones from other connected devices.
Amplifier doesn't reconnect to a previously-connected Bose SoundLink *Bluetooth* speaker or Bose headphones	Connect using the Bose app (see page 42).
Delayed audio from a connected Bose SoundLink *Bluetooth* speaker or Bose headphones	Not all Bose SoundLink *Bluetooth* speakers or headphones can play audio in perfect sync when connected to the amplifier. To check if your product is compatible, visit: worldwide.Bose.com/Support/Groups Install any available software updates for your speaker or headphones. To check for updates, open the appropriate Bose app for your product on your mobile device or visit btu.Bose.com on your computer.

RESET THE AMPLIFIER

Press the **RESET** button to reset the amplifier.

NOTE: Resetting the amplifier doesn't affect **ADVANCED SETTING** configurations, **SPEAKER SETTING** configuration, or network settings.

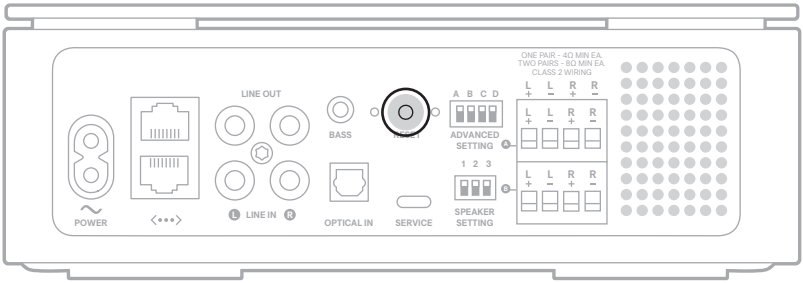

RESTORE THE AMPLIFIER TO FACTORY DEFAULT

Restoring the amplifier clears all source, volume, and network settings from the amplifier and returns it to original factory settings.

Insert a thin paperclip into the hole in the back of the amplifier and press and hold for 10 seconds until the light on the back of the amplifier blinks red 3 times.

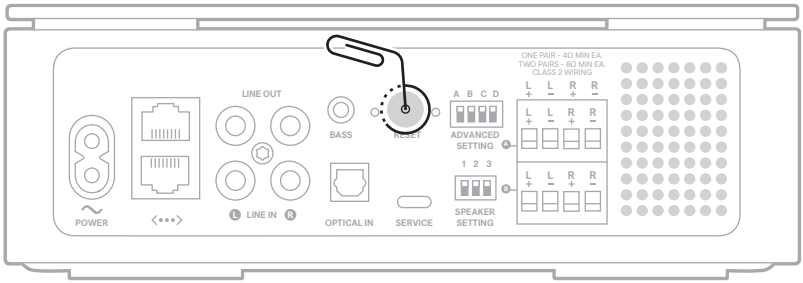

When the restore is complete, the light on the back of the amplifier slowly blinks amber.

NOTE: Restoring the amplifier doesn't affect **ADVANCED SETTING** configurations or **SPEAKER SETTING** configuration.

You can mount the amplifier on a rack (left or right side) using the mounting bracket, rack bracket, and hardware provided.

CAUTIONS:

- Only use mounting bracket, rack bracket, and hardware provided with the amplifier.
- When mounting multiple amplifiers on a rack, use a separate rack mount for each amplifier.
- Do NOT place or install the bracket or amplifier near any heat sources, such as fireplaces, radiators, heat registers, or other apparatus (including amplifiers) that produce heat.

CONNECT THE BRACKETS

1. With the rack mount arrow visible and pointing to the front of the rack, align the holes on the mounting bracket with the holes on the rack bracket.

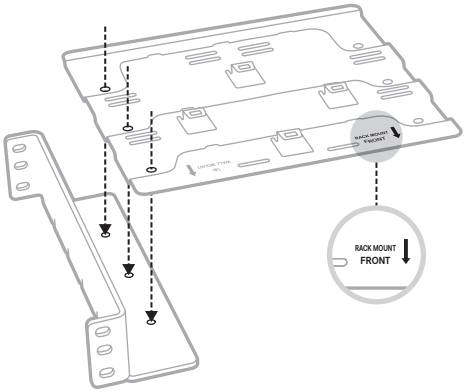

2. Insert the connecting screws through the mounting bracket and rack bracket.

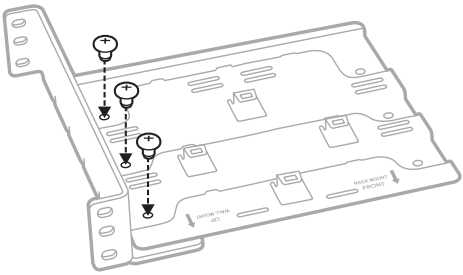

3. Using a small, Phillips-head screwdriver, turn the screws clockwise to secure the screws.

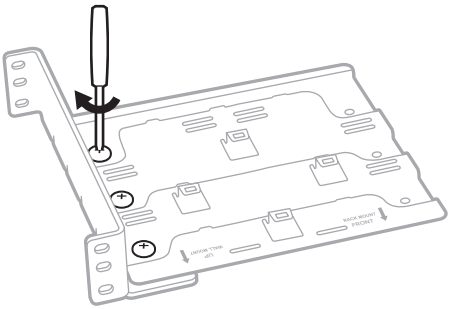

ATTACH TO THE RACK

1. Align the holes on the rack bracket to the rack.
2. Insert the rack screws through the rack bracket and rack.

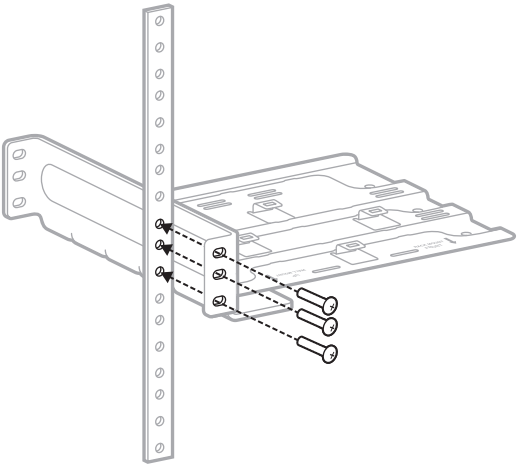

3. Turn the screws clockwise to secure the screws.

4. Repeat steps 1-3 to attach the other side of the rack bracket of the rack.

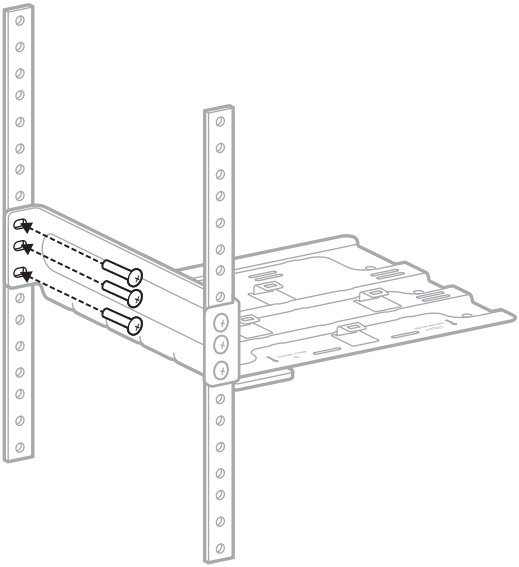

NOTE: You can also configure the assembly to attach the right side of the rack.

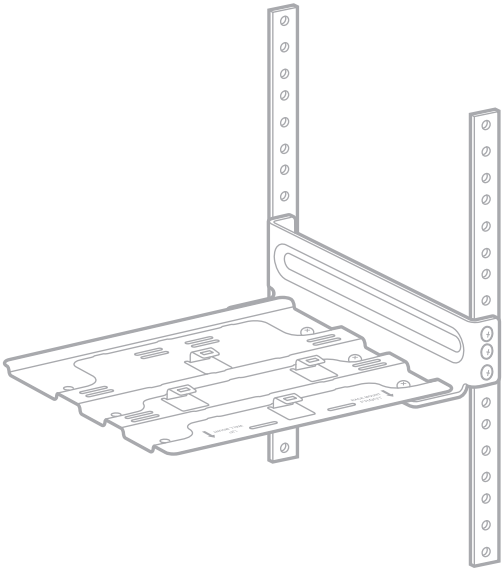

PLACE THE AMPLIFIER

1. Align the four openings on the bottom of the amplifier with the four tabs on the mounting bracket.

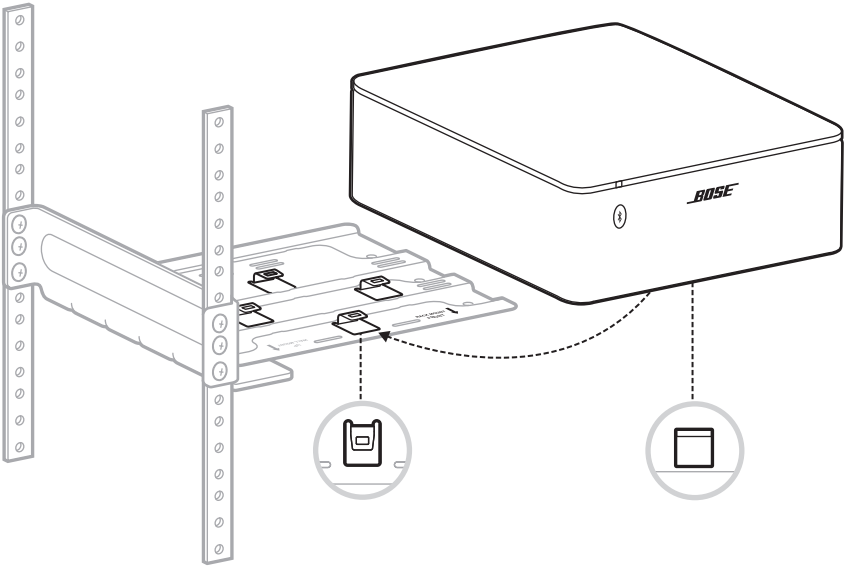

2. Gently slide the amplifier back onto the tabs until the amplifier clicks into place.

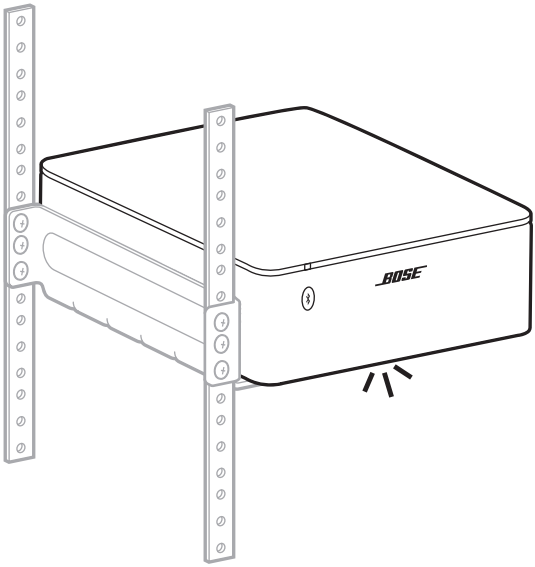

NOTE: To remove the amplifier from the mounting bracket, slide the amplifier forward to release from the tabs.

HARDWARE SPECIFICATIONS

You can mount the amplifier on a wall with the mounting bracket and hardware (not provided). When choosing the hardware, make sure you use hardware that is appropriate for the intended mounting surface.

ITEM	WOOD	WALLBOARD	MASONRY
Wall thickness	½" (12.8 mm) or thicker	⅜" (9.5 mm) or thicker	4" (101.6 mm) or thicker
Drill bit	3⁄32" (2.4 mm)	¼" (6.4 mm)	¼" (6.4 mm)
Phillips-head wood screws (4, not included)	#10 x 1¼" (M5 x 32 mm)	Not used	Not used
Anchors (4, not included)	Not used	#10 (M5) wallboard anchors **NOTE:** Requires a minimum of a 10 lb (4536g) rating.	#10 (M6) masonry anchors **NOTE:** Requires a minimum of a 10 lb (4536g) rating.

WARNING: Do NOT mount on surfaces that are not sturdy enough, or that have hazards concealed behind them, such as electrical wiring or plumbing. If you're not sure about installing the bracket, contact a qualified professional installer. Make sure the bracket is installed according to local building codes.

ATTACH THE MOUNTING BRACKET

CAUTIONS:

- Only use the mounting bracket provided with the amplifier.
- Do NOT mount the bracket on the ceiling.
- Do NOT place or install the bracket or amplifier near any heat sources, such as fireplaces, radiators, heat registers or other apparatus (including amplifiers) that produce heat.

1. With wall mount arrow visible and pointing up, position the mounting bracket on the wall.

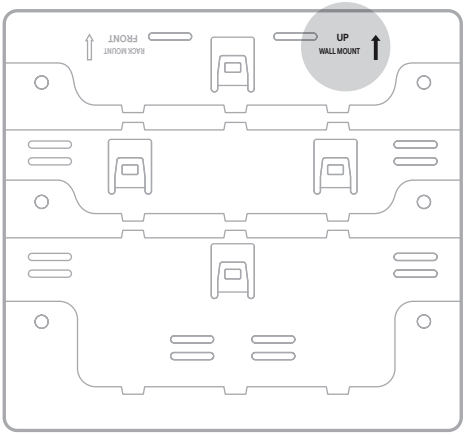

2. Mark the four mounting hole locations on the wall through the mounting bracket holes.

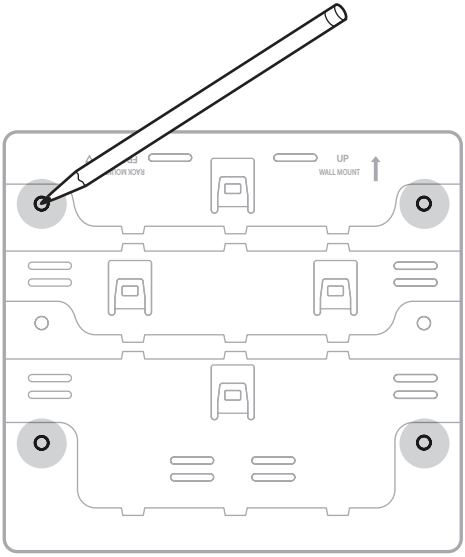

3. Remove the mounting bracket.

4. Drill four holes in the wall.
   - If mounting on wood, drill 3⁄32" holes, then continue with step 5.
   - If mounting on wallboard or masonry, refer to the instructions provided with the anchors for the proper hole size and instructions for mounting the bracket to the wall.

5. Align the mounting bracket to the drilled holes.

6. Insert four screws (not provided) through the mounting bracket.
7. Using a screwdriver, tighten the screws clockwise to secure the screws.

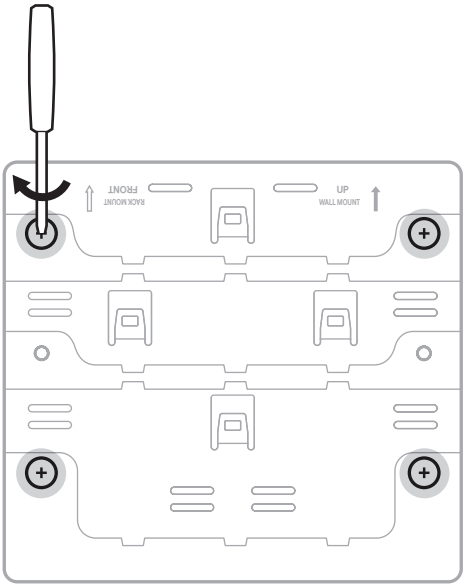

ATTACH THE AMPLIFIER

1. Align the four openings on the back of the amplifier with the four tabs on the mounting bracket.

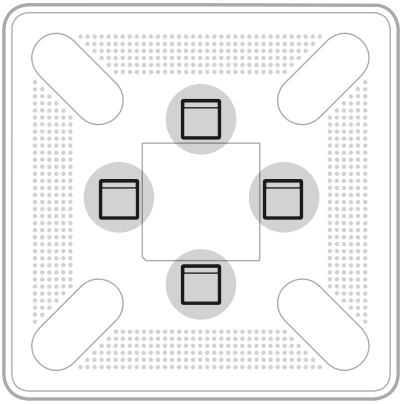

Bottom of amplifier

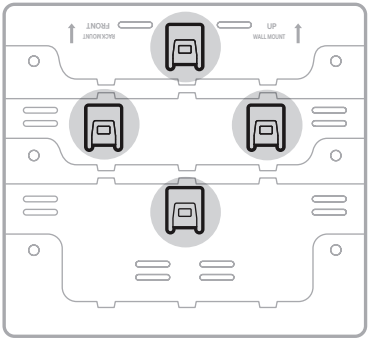

Mounting bracket

2. Gently slide the amplifier down onto the tabs until the amplifier clicks into place.

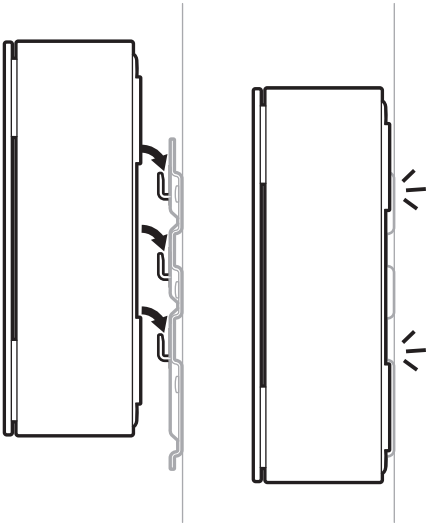

NOTE: To remove the amplifier from the mounting bracket, slide the amplifier up to release from the tabs.

You can connect the Main amplifier to your external analog or digital source using an RCA audio cable for an analog source or an optical cable for a digital source (both cables not provided).

NOTE: To play audio from an external source, the amplifier must be set up using the Bose app (see page 20).

USING AN RCA AUDIO CABLE

1. On the external source, connect the RCA audio cable's white connector to the white **LINE OUT** port and the red connector to the red **LINE OUT** port.

2. On the Main amplifier, connect the other white connector to the white **LINE IN** port and the red connector to the **LINE IN** port.

USING AN OPTICAL CABLE

1. Remove the protective cap from both ends of the optical cable.

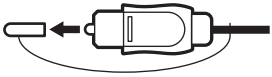

CAUTION: Inserting the plug with the cap attached can damage the plug and/or the port.

2. Insert one end of the optical cable into your source's **OPTICAL OUT** port.

CAUTION: Inserting the plug with the wrong orientation can damage the plug and/or the port.

3. On the Main amplifier, carefully insert the plug into the **OPTICAL IN** port.

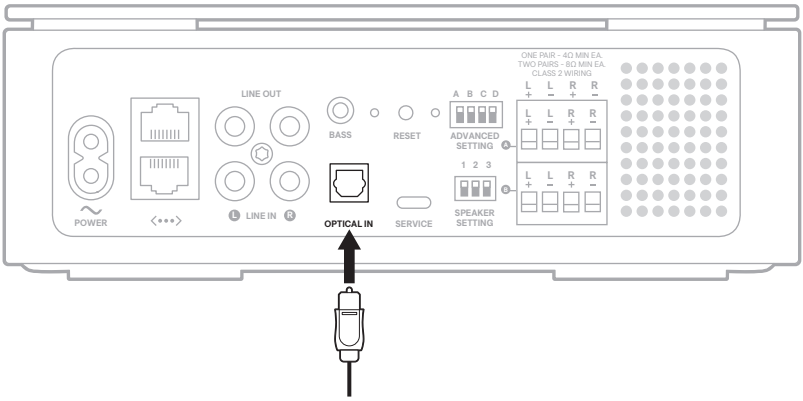

NOTE: The port has a hinged door that swings inward when inserting the plug.

4. Firmly push the plug into the port until you hear or feel a click.

872838-0010

©2026 Bose Corporation
100 The Mountain Road, Framingham, MA 01701-9168 USA AM872838-0010 Rev. 03