EWORK®

CORDLESS STRING TRIMMER

USER MANUAL

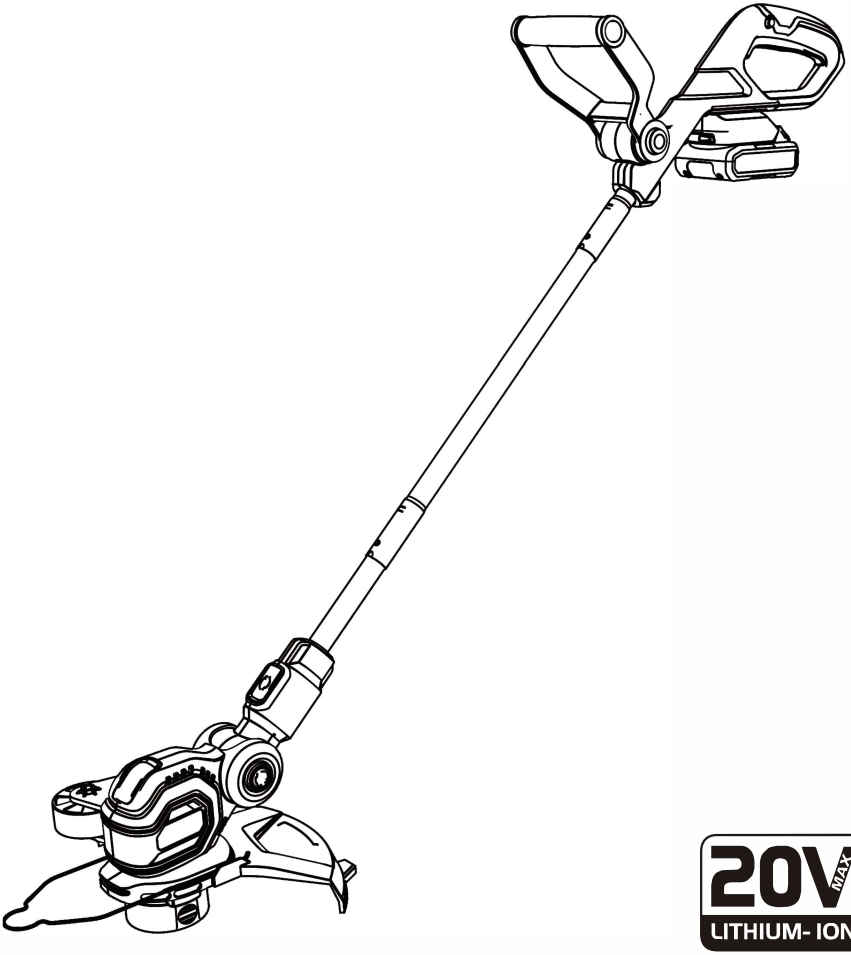

20V MAX
LITHIUM- ION

EK-DST30A-2MR

Please read before use. Keep for backup.

ASSEMBLY AND ADJUSTMENTS

Pack List (If anything wrong, contact our email to get free replacement.)

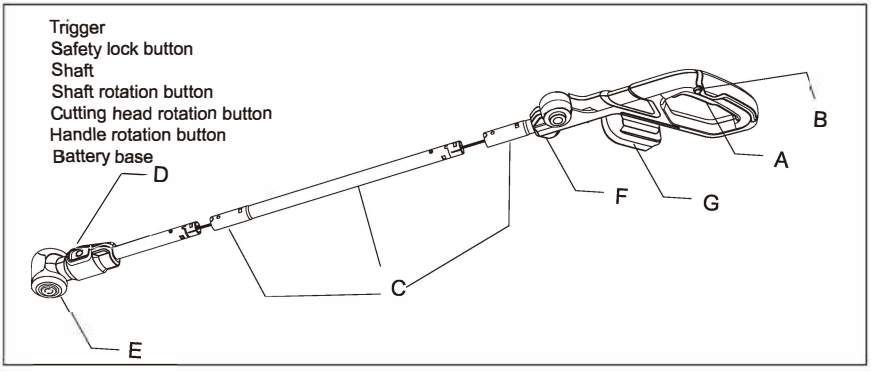

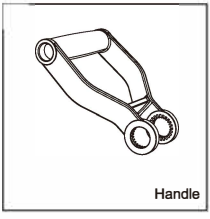
Handle

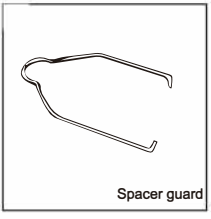
Spacer guard


Safety guard

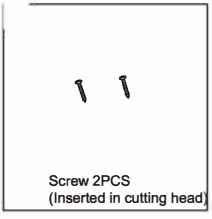
Screw 2PCS
(Inserted in cutting head)

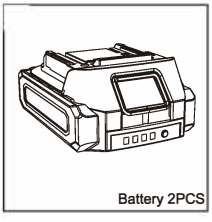
Battery 2PCS

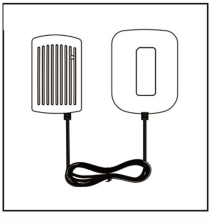


Spool cap

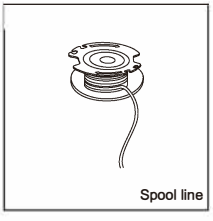
Spool line

2. Technical data

Model	EK-DST30A-2MR
Voltage	20V Max
Max no-load speed	9000 RPM
Max Cutting Diameter	12"
Cutting Line Diameter	0.055"

Installation Guide

1.Assembling the shaft

Step 1:

Unpack the tri-fold shaft carefully, they are joined by internal wiring.

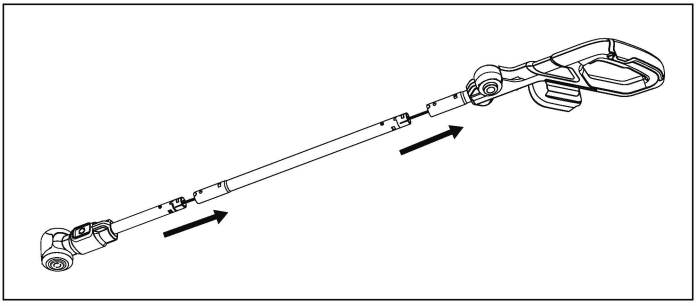

Step 2:

To connect the Lower shaft to the Middle section, align the Stop pin(A) and the Pinhole(B), press the pin and insert the Lower shaft into the Middle section until the pin locked in the pinhole securely.

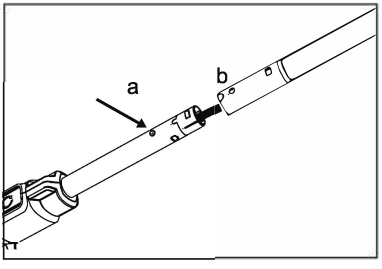

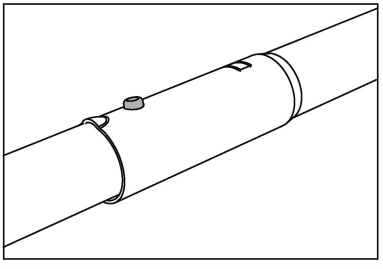

Step 3:

To connect the Middle section to the Upper shaft, align the Stop pin(A) and the Pinhole(B), press the pin and insert the Middle section into the Upper shaft until the pin locked in the pinhole securely.

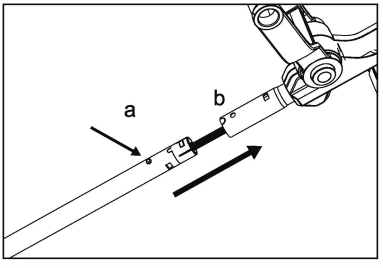

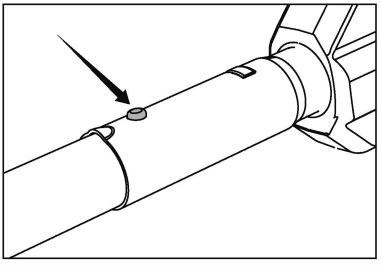

Installation Guide

2. Installing the Spacer guard and the Safety guard

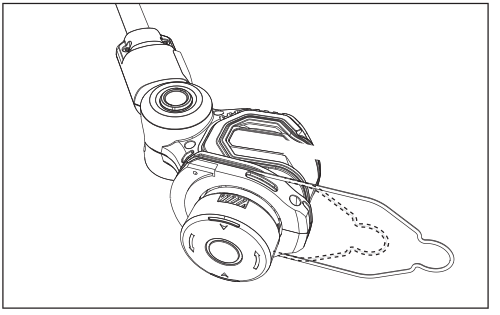

Step 1:
As shown below, fit the Spacer guard into the groove on Cutting head.

WARNING:

Using the string trimmer without proper installation of the Safety guard and Spacer guard may result in serious personal injury.

Step 2:
Use the supplied Phillips screwdriver to unscrew the screws on the Cutting head, fit the Safety guard into the slots and line up the screw holes, then install the screws and tighten them

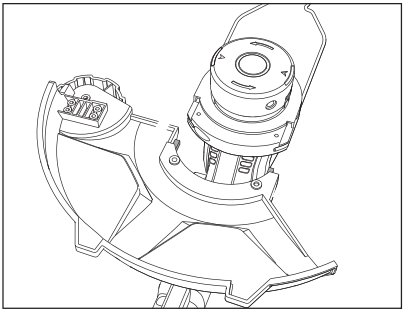

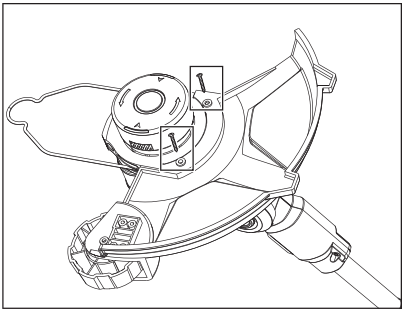

3. Installing the Auxiliary handle

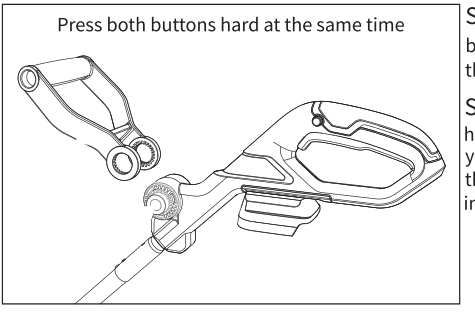

Step 1: Press in on Auxiliary handle rotation buttons on both sides of Upper shaft and position the handle as shown below.

Step 2: Partially push the handle on so it will hold the buttons in when you release them with your hand. Push the handle completely onto the housing and position it slightly until it “snaps” into place.

Installation Guide

4. Battery pack installing and removing

• To install the battery pack, align the tongue on the battery pack with the groove in the housing and slip it into place. Insert it all the way until it locks in place with a little click.

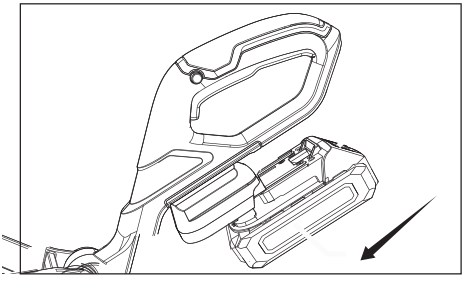

CAUTION:
Always install the battery pack fully until the click-lock cannot be seen. If not, it may accidentally fall out of the tool, causing injury to you or someone around you.

CAUTION:
Do not install the battery pack forcibly. If the pack does not slide in easily, it is not being inserted correctly.

• To remove the battery pack, slide it away from the tool while pressing the button on the front of the pack.

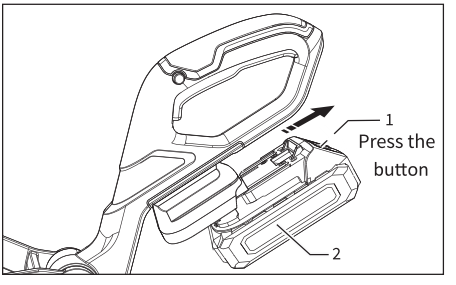

1.Button 2. Battery pack

CAUTION: Always switch off the tool before installing or removing the battery pack.

CAUTION: Hold the tool and the battery pack firmly when installing or removing the battery pack. Failure to hold the tool and the battery pack firmly may cause them to slip off your hands and result in damage to the tool and battery pack and a personal injury

I.Get ready to use

(1) Instruction

This trimmer is equipped with a line cut-off blade (Figure 1) on the guard. The line tips will fray and wear during use, and the special self-feeding spool will automatically feed and the cut-off blade will trim a new section.

Please remove the tape covering on the line cut-off blade, or it may affect the auto-feed function.

Figure 1

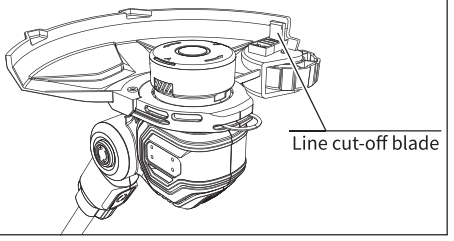

II.Operating the trimmer

(1) Turn the unit on

· The tool is equipped wih Safety lock buttons on both sides, so both left-handed person and right-handed person can easily start the machine.

· To turn the unit on, press the Safety lock button(A) first, then squeeze the Trigger(B) simultaneously.

Figure 2

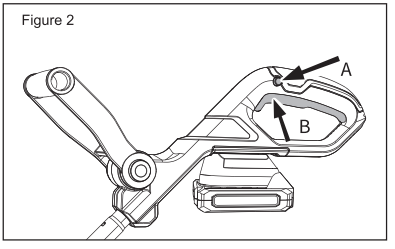

(2) Auto Feed Head & Adjusting the Line Length

· First time use, please press the auto feed button(A) to take a right length of spool line.

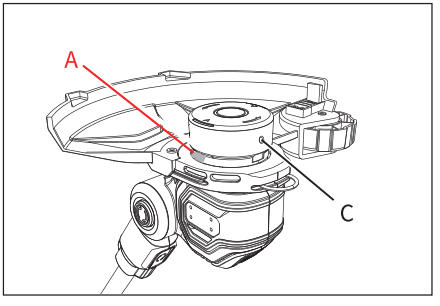

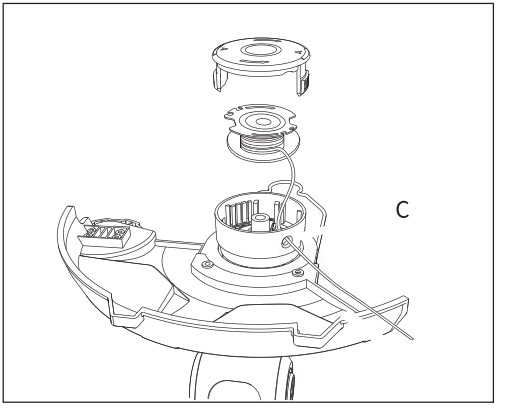

· The line will automatically feed when the trimmer is started.
· During use, the line will become wron, or may break off if it strikes a stone or a similar hard object.
· If the cutting line requires more feeding, please restart the trimmer, the line will automatically feed when the trimmer is being restarted. Excess line will be cut off by the cutting blade.
· After starting the tool for 3s-5s, the tool will be in a stable state. Before the tool enters a stable state, do not start the machine repeatedly, which will cause unnecessary consumption of string lines.

CAUTION: Before you begin trimming only use the appropriate type of string line.

CAUTION: Inspect area to be trimmed and remove any wire, cord,or string-like objects which could become entangLED in the rotating line or spool. Be particularly careful to avoid any wire which might be bent outwardly into the path of the appliance, such as barbs at the base of a chain link fence.

WARNING: Use personal protective equipment. ALWAYS wear eye protection. Protective equipment such as dust mask, non-skid safety shoes, hard hat, or hearing protection use a for appropriate conditions will reduce personal injuries.

WARNING: Dress properly. Do not wear loose clothing or jewelry. They can be caught in moving parts. Gloves and substantial rubber soled footwear are recommended when working outdoors. Don't operate the appliance when barefoot or wearing open sandals. Wear heavy long pants to protect your legs. Wear protective hair covering to contain long hair.

(3) Turn off the unit

· To turn the unit off, just release the Trigger(B).

WARNING: Operate the machine with both hands during operation, when you hold the rear handle with one hand, the other hand should hold the Auxiliary handle.

III. Adjusting the hadle

To adjust the handle up or down, press in on both Auxiliary handle rotation buttons and raise or lower the handle. The handle should be adjusted so that your front arm is straight when the trimmer is in the working position.

Figure 3

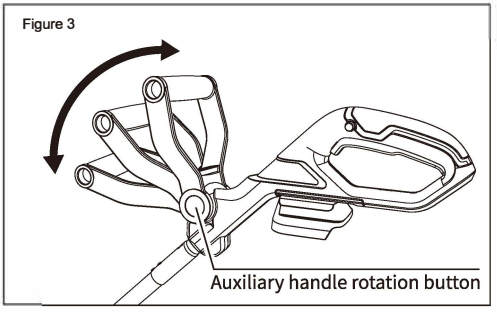

IV. Adjust the head

• According to differen cutting requirements, you can press the Cutting head rotation button and adjust the angle from 0°-90°.

Figure 4

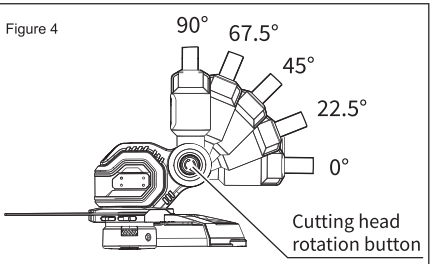

NOTE:

- Use the tip of the line to do the cutting. Do not cut in the dangerous area.
- Do not force the trimmer head into uncut grass.
- Wire fences, picket fences, brick wall, curbs, or wood can cause extra wear, even breakage.

CAUTION: The wheel ONLY serves for easier guidance when trimming edges, it should not be used for cutting.

WARNING: Risk of damage to the unit! Avoid contact with solid surfaces to prevent rapid wear of the string line.

V. Trimming

- Tilt the machine toward the area to be cut. Use the tip of the string line to cut grass. Slowly swing the machine from right to left to prevent thrown debris toward the operator.

Figure 5

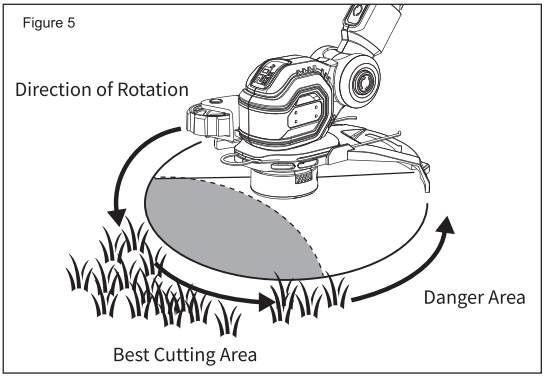

- While trimming, maintain a cutting angle of 5° to 10° (figure 6), do not exceed 10° (figure 7).

Figure 6

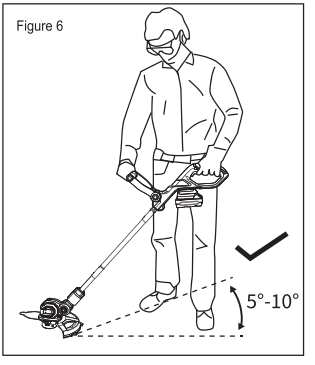

Figure 7

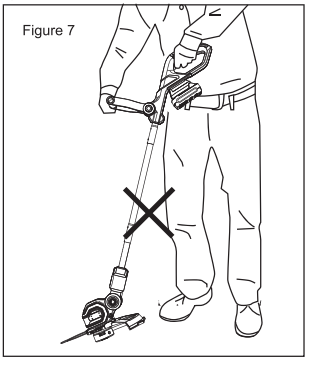

• Maintain a minimum distance of 24 inches (609.6 mm) between the guard and your feet as shown in figure 8 .

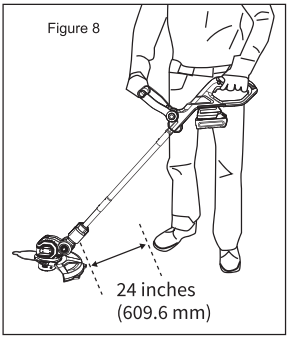

VI. Edging

The trimmer can be used in edging mode to trim overhanging grass along lawn edges and flower beds.

- Remove the battery pack from the tool.
- Press the Cutting head rotation button, rotate the cutting head to 0° as shown in Figure 9.
- Press the Shaft rotation button, rotate the shaft to 90° as shown in Figure 10.
- The string trimmer is in Edging mode, as shown in the figure 11.

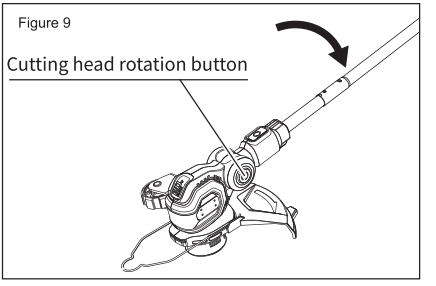

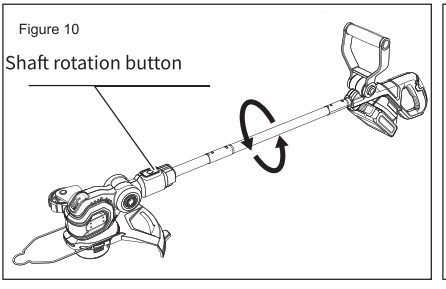

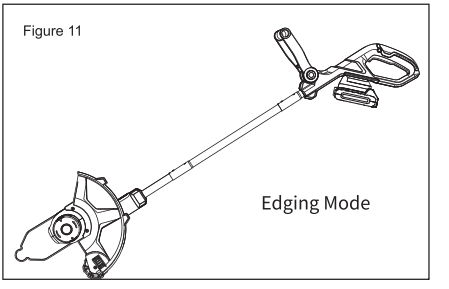

⚠ WARNING:

When being used as an Edger, stones, pieces of metal and other objects can be thrown out at high speed by the line. The trimmer and guard are designed to reduce the danger. However, the following special precautions should be taken ： MAKE SURE that other persons and pets are at least 100 feet (30m) away.

Optimum cutting results are achieved on edges deeper than 2 inches (50 mm).

Figure 12

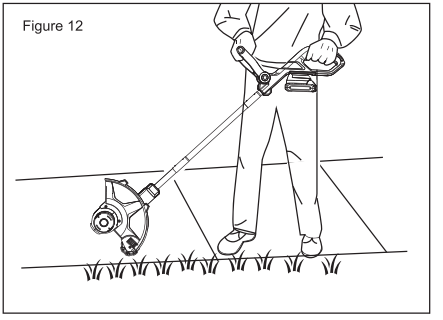

• Position the edging wheel on the edge of the sidewalk or abrasive surface so the string line is over the grass or dirt area to be edged.

• Using the edging wheel guide the trimmer as shown in figure 12.

NOTE:

• You will experience faster than normal string line wear if the trimmer line is positioned directly over the sidewalk or abrasive surface.

• To return to trimming mode, first press the Cutting head rotation button, adjust to your ideal angle, then press Shaft rotation button, rotate the shaft clockwise back to its original position.

VII. Instruction of the Spacer guard

When you use the tool where there are flowers and plants, to protect them, pull out the Spacer guard on the cutting head. As shown below, the Spacer guard helps distancing flowers and plants from the tip of cutting line.

Figure 13

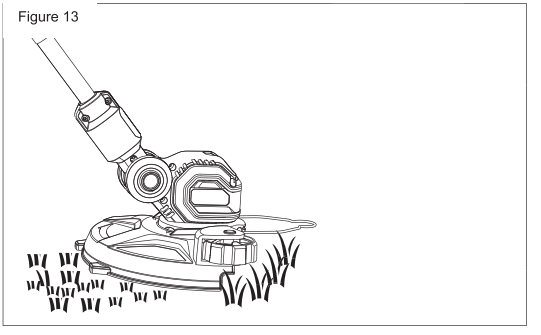

IX.Charger quick guide

For DC Charger

Plug the DC cable into the charge port of the battery, and plug into the outlet.

Note: Only use original charger

1. Connect the charger to an appropriate outlet before inserting cable into the battery pack.
2. Insert charging cable into port of the battery pack.
3. The red LED will be indicating that the battery is being charged.
4. The completion of the charge is indicated by the green LED remaining on continuously.

Please let the battery cool down before charged.

MAINTAINANCE

• Check for misalignment or binding of moving parts, breakage of parts and any other condition may affect the equipment's operation. If damaged, contact us (support_ework@yeah.net) before using. Many accidents are caused by poorly maintained equipment.

WARNING:
Before performing any maintenance, switch off tool and remove battery, and always put on gloves.

1. Clean and maintenance

(1) Clean

• Remove the battery first.
• Keep the machine and the motor free of leaves, branches or excessive oil to prevent fire risks. Clean the machine after use with a moist cloth dipped in neutral detergent.
• Do not use aggressive detergents or solvents to clean the plastic parts or handles. Keep the trimmer head free of grass, leaves, or excessive grease.
• Keep the air vents clean and free of debris to avoid overheating and damage to the motor or the battery.
• Do not spray water onto the motor and electrical components.
• Plastic parts may be cleaned by using a mild soap and a damp rag.

(2) Maintenance

CAUTION: Do not let brake fluids, gasoline, petroleum-based materials touch the plastic parts. Chemicals can cause damage to the plastic, and make the plastic unserviceable.

CAUTION: Do not use strong solvents or detergents on the plastic housing or components. WARNING! Remove the battery pack from the machine before maintenance.

2. Store the machine

• Clean the machine before storage.
• Make sure that the motor is not hot when you store the machine.
• We suggest checking all parts before storing the machine. If the screws on the Safety guard become loose, tighten them with screwdriver. If you find some part of machine is broken, contact us at: support_ework@yeah.net
• Disassembling the shaft into three sections for storage is not recommended. If you must, pay extra attention to sharp objects that may damage the internal wire.
• Make sure that children can not get close to the place you stored machine.

3. Tips for maintaining

• Charge the battery pack in time before it is completely drained out. When you find that the power of the tool is low, stop the tool operation and charge the battery pack.
• DO NOT recharge a fully charged battery pack. Overcharging will shorten the life of the battery.
• Longest life and best performance can be obtained if the battery pack is charged when the air temperature is between 65 ℉ and 75 ℉ (18 ℃ - 24 ℃).

⚠ CAUTION:

Read all warnings and instructions. Failure to follow the warnings and instructions may result in electric shock, fire and/or serious injury. AND DO NOT allow persons unfamiliar with the equipment or these instructions to operate the equipment. The equipment is dangerous by untrained users.

1.Important details before using the String trimmer

• Wear safety glasses and hearing protection. Further protective equipment for head, hands, legs and feet is recommended. Adequate protective clothing will reduce personal injury by flying debris or accidental contact with the blade.
• Always keep proper footing and operate the String trimmer only when standing on fixed, secure and level surface. Slippery or unstable surfaces may cause a loss of balance or control of the Power tool.
• Before turning the String trimmer on, remove any adjusting key or wrench. A wrench or a key left attached to a rotating part of the String trimmer may result in personal injury.
• AVOID accidental starting. DO NOT push any switch the of the String trimmer before connecting the battery pack.
• Check for misalignment or binding of moving parts, breakage of parts and any other condition may affect the equipment's operation. If damaged, contact us (support_ework@yeah.net) before use.
• DO NOT allow to be used as a toy. Close attention is necessary when used by or near children. Not recommended for use by children.
• STAY ALERT, watch what you are doing. Use common sense.
• DO NOT operate String trimmer when you are tired.
• Keep handles and grasping surface dry, clean and free from oil and grease. Slippery handle and grasping surfaces do not allow for safe handling and control of the String trimmer in unexpected situations.
• Before inserting the battery pack into the tool, always check that the Trigger and the Safety lock buttons can be pulled freely and will return to its original position when released, please check that the tool is in good and safe working condition, make sure the Guard cover is in place, and do not use the tool until it is fully installed.

⚠ WARNING:

• DO NOT attempt to modify this Power tool or create accessories not recommended for use with this Power tool. Any such alteration or modification is misuse and could result in a hazardous condition leading to possible serious injury.
• To prevent accidental starting that could cause serious personal injury, always remove the battery pack from the Power tool when assembling parts, making adjustments, or cleaning the tool.
• Operate the tool only by grasping the insulated handle, because the blade may come into contact with hidden wires. When the blade comes into contact with a live wire, exposed metal parts of the power tool may also become live and shock the operator.
• Keep all parts of the body at a certain distance from the blade. Do not remove the cutting material or hold down the material while the blade is moving.
Make sure the switch is off when removing jammed material, distraction during operation of the Power tool can result in serious personal injury.

2.Operating environment

• Operate the Power tool in well-ventilated areas only.
• AVOID DANGEROUS ENVIRONMENTAL CONDITIONS – DO NOT use the String trimmer in the rain or any wet environment, never let water and any liquid get inside the Power tool.
• AVOID body contact with earthed or grounded surfaces such as pipes, radiators, ranges and refrigerators. There is an increased risk of electric shock if your body is earthed or grounded.
• Keep work area clean and well. Cluttered or dark areas invite accidents.
• DO NOT operate String trimmer in explosive atmospheres, such as in the presence of flammable liquids, gases or dust. The equipment may create sparks which may ignite the dust and fumes.

3. About battery and charger

• USE THE String trimmer ONLY as described in this manual. USE ONLY manufacturer's recommended attachments of the Power tool. USE ONLY charger supplied by the manufacturer to recharge, and DO NOT CHARGE Power tool's battery outdoors.
• USE BATTERY OPERATED UNIT ONLY with specifically designated battery pack. Use of any other batteries may create a risk of fire.
• EXERCISE CARE in handling batteries in order not to short the battery with conducting materials such as rings, bracelets and keys. The battery or conductor may overheat and cause burns.
• DO NOT OPEN OR MUTILATE the batteries. Released electrolyte is corrosive and may cause damage to the eyes or skin. It may be toxic if swallowed.

4. Protection system

The tool is equipped with a tool/battery protection system. This system automatically cuts off power to the motor to extend tool and battery life. The tool will automatically stop during operation.

OVERLOAD PROTECTION

When the tool is operated in a manner that causes it to draw an abnormally high current, the tool automatically stops without any indication. In this situation, turn the tool off and stop the application that caused the tool to become overloaded. Then turn the tool on to restart.

OVERHEAT PROTECTION

Continuous operation of the tool will cause the battery temperature to rise and heat up. The tool will automatically stop without any instructions. In this case, the battery activates the temperature protection and will reboot after tool and battery cool down.

LOW POWER PROTECTION

When the battery capacity is not enough, the tool stops automatically. In this case, remove the battery from the tool and charge the battery.

Replace the Line Spool

The string trimmer comes with 8 string spools.

- As shown in the Figure 14, press the Lock tabs (A) on both sides of the spool housing, and remove the Spool cap(B).
- Grasp empty spool with one hand and spool housing with other hand and pull spool out.
- Remove any dirt and grass from the spool and housing.
- Insert the end of string line into the Eyelet (C) and fit the replacement spool into housing until it is seated, the line should protrude approximately 10 inches.
- Install the Spool cap(B) back securely Figure 15.

Figure 14

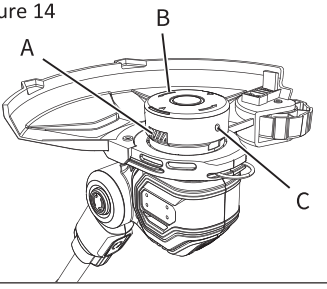

Figure 15

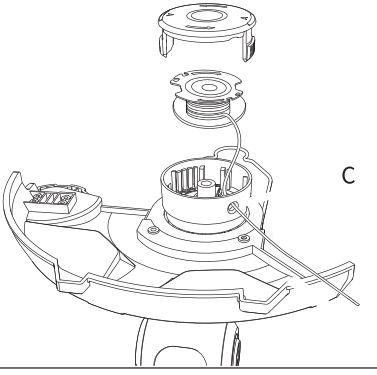

NOTE:

- You can buy replacement String line spool on Sunchers Amazon store.
- DO NOT LOSE THE SPOOL CAP, the String trimmer can not work properly without the spool cap, if you miss the spool cap accidentally, contact us at: support_ework@yeah.net

NOTE:

To install bulk line, follow the steps below:

• Remove battery from the String trimmer, and remove the empty String spool.

• Remove any remaining cutting line from the spool.

• Make a fold at the end of the cutting line at about 3/4 inch (19mm), insert the end into the Anchoring hole(A) marked in the figure 16.

• Wind the string line onto the spool in the direction of the arrow on the spool.(Figure 17) Make sure to wind the line on neatly and in layers, do not crisscross (figure 18).

• When the wound cutting line reaches the Recesses(B), cut the line(Figure 19).

figure 16

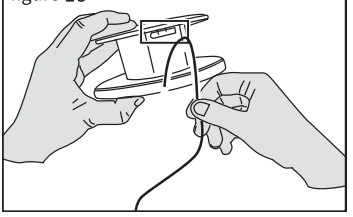

figure 17

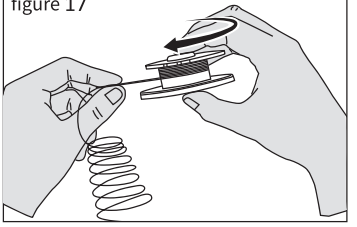

Figure 17

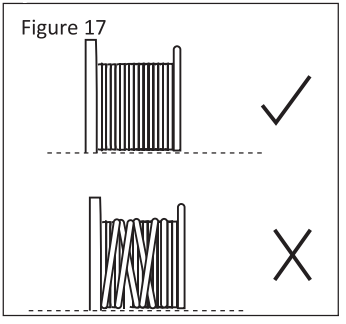

figure 19

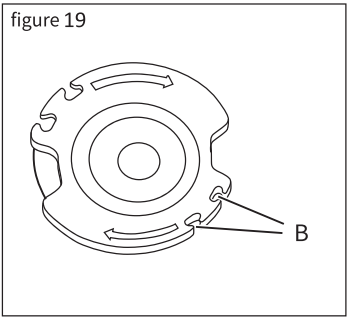

8. Important warnings while using the String trimmer

• Never position hand near or directly in front of working area. Always hold the tool with both hands and must wear protective equipment.

• Disconnect the battery pack from the equipment before making any adjustment or storing the equipment. Such preventive safety measures reduce the risk of starting the equipment accidentally.

⚠ WARNING:

After each use, to prevent accidental start, please ensure that the battery on the Power tool has been pulled out. And to prevent accidental cuts, please wear protective gloves.

Trouble Shooting

Please keep this manual for further use or any questions.

If the problem still unsolved or having any other problem, please feel free to contact us. We will do our best to solve your problem and provide with free replacement parts or set.

Email address:support_ework@yeah.net

1. Problem of String Trimmer

(1). After turning on, the trimmer turn off once the safety lock button(A) released while the trigger(B) still pressing on.

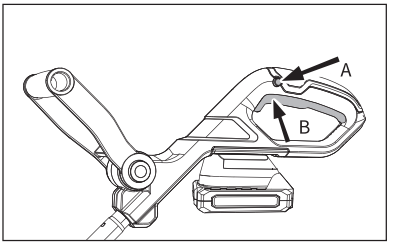

The locking setting maybe wrong. Please feel free to contact Ework for a new mechaine. (Email:support_ework@yeah.net)

(2). The string trimmer can not get started.

Please follow the steps to help confirm which part is wrong and contact EWORK for a free new part without your returning.

Step 1: Please help confirm the batteries and charger are working properly. Then the batteries are fully charged.

The charger will have the red light meaning it is working properly. And it will turn green when the work is finished.

If not, the charger is wrong, please contact EWORK to get a free new one.

Step 2: Please make sure the safety lock button was fully press before press the trigger.

If step1 and step2 can not solve the problem, the trimmer itself may go wrong. Please contact Ework to get a free new products.(Email: support_ework@yeah.net)

(3). The string trimmer shuts down in use.

Please follow the steps to help confirm which part is wrong and contact Ework for a free new part without your returning.

Step 1: Please check the state of battery, if it is lack of power, please recharge.

Step 2: Please check if it is lack of spool line, If yes, please replace the spool line. Please also make sure the spool line is not cross, if they are corss, please rewind and note to not cross the spool line.

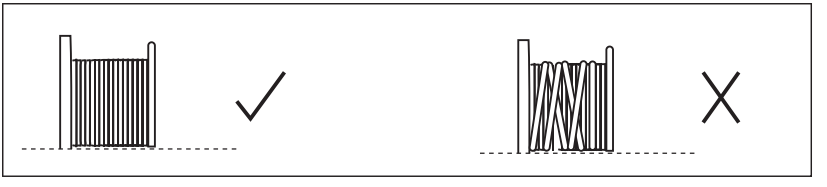

Step 3: The string trimmer may stop by the over-temperature protection, please let it cool down and then restart.

If it always stops during working time, please feel free to contact Ework for a free new mechaine.



If step1 to step3 can not solve the problem, the trimmer itself may go wrong. Please contact Ework to get a free new products.(Email:support_ework@yeah.net)

2. Problem of Auto Feed Spool line

(1). The automatic line feed doesn't work or the spool is jammed.

Please follow the steps to help confirm which part is wrong and contact Ework for a free new part without your returning.

Step 1: Please carefully clean the spool and housing. Stains may prevent sensors from working.
Step 2: Please carefully check that the bottom of the string trimmer is not tangled with weeds, and clean the weeds tangled in the machine in time.

Step 3: Please make sure you are using
the correct size of spool line smaller and larger size will affect the auto feed function.
(We recommend using the spool line that comeswith the machine.)

Step 4: Please remove the spool and check if the lever in the spool housing can move freely.
(Press the auto feed button to see if the lever move freely.)

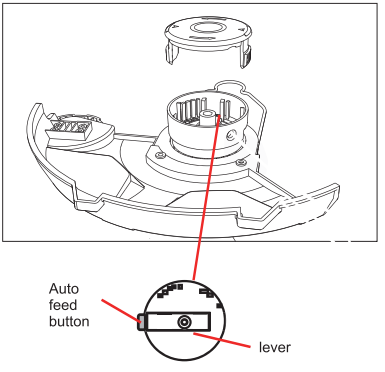

(2). When hit the hard roots of the plant, the rope may break, follow the steps the solve it.

Step 1: There's no rope end at all, you need to pull the rope out manually.
Step 2: There's a little bit of rope left, you can turn on - turn off - restart the machine. (The machinecomes to a steady stop before switching it on and off again, and this may need to be repeated several times.) Then the machine can resume automatic feed spool line.

(3). The auto feed head doesn't feed more line.

Please follow the steps to help confirm which part is wrong and contact Ework for a free new part without your returning.

Step 1: Keep the lock tabs depressed and remove the spool from the spool housing in the trimmer head. Ensure that the line is not crisscrossed on the spool. If it is, please unwind the cutting line, then wind it back on the spool neatly so that the lines do not cross.

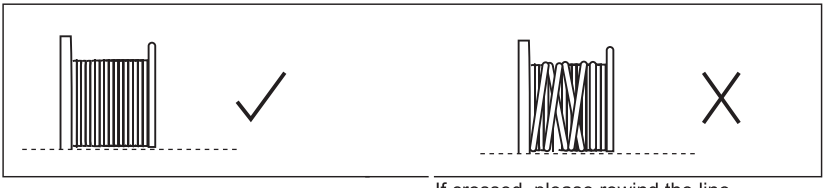

If crossed, please rewind the line.

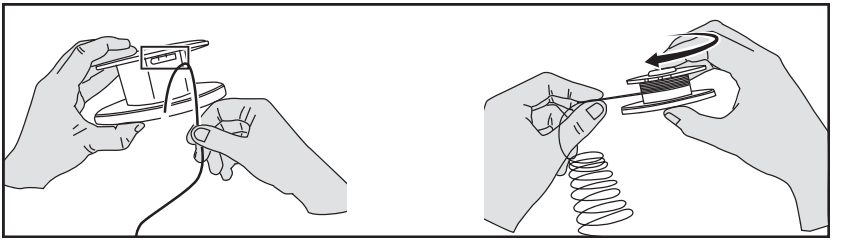

Step 2: Please check if the inspect tracks at the bottom of spool for damage. If damaged, contact us for a free new spool.

Step 3: Please pull the cutting line until it protrudes approximately 4-13/16 inches(122mm) from the spool. If insufficient cutting line is left on the spool, install a new spool of cutting line.

3. Problem of Battery and Charger

(1). The battery won't charge.

Please follow the steps to help confirm which part is wrong and contact Ework for a free new part without your returning.

Step 1: Please insert battery into cheger until red charging light illuminates. Charge up to 8 hours if battery is totally drained.

Step 2: Please let the battery cool down first and then try to charge again.

Step 3: Please check the current in the outlet by plugging in other appliance, for example a lamp. If other appliance work, the battery may go wrong, please contact us for a free new battery. If other appliance doesn't work, the charger may go wrong, please contact us for a free new charger.

DEFINITIONS

The information it contains relates to protecting your safety and preventing problems.
The symbols below are used to help you recognize this information.

DANGER: Indicates an imminently hazardous situation that, if not avoided, will result in death or serious injury.

WARNING: Indicates a potentially hazardous situation that, if not avoided, could result in death or serious injury.

CAUTION: Indicates a potentially hazardous situation that, if not avoided, may result in minor or moderate injury.

NOTICE: Used without the safety alert symbol indicates a potentially hazardous situation that, if not avoided, may result in property damage.


Read instruction manual before using the tool.


Wear eye protection before using the tool.


Wear dust mask before using the tool.


Do not expose power tools to rain or wet conditions.

1. Symbols

The label on your tool may include the following symbols. The symbols and their definitions are as follows:

V.....volts
A.....amperes
Hz.....hertz
min.....minutes
~or AC.....alternating current
or DC.....direct current
⚠ .....safety alert symbol
.../min or rpm...revolutions or reciprocation per minute

GENERAL POWER TOOL SAFETY WARNINGS

⚠ TO REDUCE RISK OF INJURY:

• Before any use, be sure everyone using this unit reads and understands all safety instructions and other information contained in this manual.
• Save this manual and review frequently before using and instructing others.
• DO NOT point unit discharge at self or bystanders.

⚠ WARNING:

When using an electric tool, basic safety precautions should always be followed to reduce risk of fire, electric shock, and personal injury.

⚠ WARNING:

Some dust created by power sanding, sawing, grinding, drilling and other construction activities contains chemicals known to the state of California to cause cancer, birth defects, or other reproductive harm. Some examples of these chemicals are Lead from lead-based paint, crystalline silica from bricks and cement and other masonry products, and arsenic and chromium from chemically treated lumber.
To reduce your exposure to these chemicals, wear approved safety equipment such as dust masks that are specially designed to filter out microscopic particles.

1. Work area safety

• Operate the power tool in well-ventilated areas only.
• Keep work area clean and well lit. Cluttered or dark areas invite accidents.
• Do not operate power tools in explosive atmospheres, such as in the presence of flammable liquids, gases or dust. Power tools create sparks which may ignite the dust or fumes.
• DO NOT immerse any part of the unit in liquid.
• DO NOT handle charger, including charger plug, and charger terminals with wet hands.
• KEEP CHILDREN, BYSTANDERS AND ANIMALS AWAY from the work area a minimum of 30 feet (10 meters) when starting or operating the unit.
• INSPECT THE AREA before using the unit. Remove all debris and hard objects such as rocks, glass, wire, etc. that can be kickback, be thrown, or otherwise cause injury or damage during operation.

2. Personal safety

• Use personal protective equipment. ALWAYS wear eye protection. Protective equipment such as dust mask, non-skid safety shoes, hard hat, or hearing protection use a for appropriate conditions will reduce personal injuries.
• Dress properly. Do not wear loose clothing or jewellery. Keep your hair, clothing and gloves away from moving parts. Loose clothes, jewellery or long hair can be caught in moving parts.
• Stay alert, watch what you are doing and use common sense when operating a power tool. Do not use a power tool while you are tired or under the influence of drugs, alcohol or medication. A moment of inattention while operating power tools may result in serious personal injury.
• If devices are provided for the connection of dust extraction and collection facilities, ensure these are connected and properly used. Use of dust collection can reduce dust-related hazards.
• Do not let familiarity gained from frequent using of tools allow you to become complacent and ignore tool safety principles and the instruction manual. A careless action could cause severe injury within a fraction of a second.

3. Power tools use and care

• USE ONLY as described in this manual. USE ONLY manufacturer's recommended attachments. USE ONLY charger supplied by the manufacturer to recharge.
• DO NOT CHARGE the unit outdoors.
• USE BATTERY-DRIVEN TOOLS ONLY with specifically designated battery pack. Using any other batteries may create a risk of fire.
• EXTRAODINARILY CARE in handling batteries in order not to short out the battery with conducting materials such as rings, bracelets and keys. The battery or conductor may overheat and cause burns.
DO NOT OPEN OR MUTILATE the batteries. Released electrolyte is corrosive and may cause damage to the eyes or skin. It may be toxic if swallowed.

AVOID DANGEROUS ENVIRONMENTAL CONDITIONS – DO NOT use electric units in damp or wet locations. Don't use the unit in the

AVOID body contact with earthed or grounded surfaces such as pipes, radiators, ranges and refrigerators. There is an increased risk of electric shock if your body is earthed or grounded.

AVOID accidental starting. Ensure the switch is in the off position before connecting to power source and/or battery pack, picking up or carrying the tool.

DO NOT use unit if switch does not turn it on or off. A unit that cannot be controlled with the switch is dangerous and must be repaired.

DISCONNECT battery pack from unit or place the switch in the locked or off position before making any adjustments, changing accessories, or storing the unit.

DON'T OVERREACH. Always keep proper footing and balance. This enables better control of the power tool in unexpected situations.

Before turning the power tool on, remove any adjusting key or wrench. A wrench or a key left attached to a rotating part of the power tool may result in personal injury.

ACCURATELY USE UNIT – DO NOT use this unit for any job except that for which it is intended.

DO NOT allow to be used as a toy. Close attention is necessary when used by or near children. Not recommended for use by

STAY ALERT – Watch what you are doing. Use common sense.

DO NOT operate unit when you are tired. Keep handles and grasping surface dry, clean and free from oil and grease. Slippery handle and grasping surfaces do not allow for safe handling and control of the tool in unexpected situations.

DO NOT attempt to repair the power tools. To assure product safety and reliability, repairs, maintenance, and adjustments should be performed by pro-workers.

- MAINTAIN UNIT WITH CARE. Keep unit clean for best and safest performance.
- STORE IDLE UNITS. When not in use, the power tool should be stored in a dry, high or locked-up place, out of reach of children.

BATTERY CHARGERS

1. Important safety instructions for battery charger

SAVE THESE INSTRUCTIONS:
This manual contains important safety instructions for battery chargers.
Before using the charger, read all instructions and cautionary markings on the charger.
Before using the battery pack and charger, read the safety instructions below. Then follow the charging procedures outlined.

⚠ **WARNING:** Shock hazard. DO NOT allow any liquid to get inside charger.

⚠ **CAUTION:** Burn hazard. To reduce the risk of injury, charge only designated batteries. Other types of batteries may burst to cause personal injury and damage.

⚠ **CAUTION:** Under certain conditions, with the charger plugged into the power supply, the charger can be shorted by foreign material. Foreign materials of a conductive nature such as, but not limited to, steel wool, aluminum foil, or any buildup of metallic particles should be kept away from charger cavities. Always unplug the charger from the power supply when there is no battery pack in the cavity. Unplug the charger before attempting to clean.

- DO NOT attempt to charge the battery pack with any chargers other than the ones in this manual. The charger and battery pack are specifically designed to work together.
- These chargers are not intended for any uses other than charging designated rechargeable batteries. Any other uses may result in a risk of fire, electric shock, or electrocution.
- DO NOT expose the charger to rain or snow. Pull by plug rather than cord when disconnecting charger. This will reduce the risk of damage to the electric plug and cord.
- Make sure that the cord of charger is located suitably so that it will not be stepped on, tripped over, or otherwise subjected to damage or stress.
- DO NOT use an extension cord. Use of improper extension cord could result in a risk of fire, electric shock, or electrocution.

- DO NOT operate chargers with damaged cords or plugs — have them replaced immediately.
- DO NOT operate the charger if it has received a sharp blow, been dropped, or otherwise damaged in any way. If the above problem occurs, please contact us at: support_ework@yeah.net
- DO NOT disassemble charger, incorrect reassembly may result in a risk of electric shock, electrocution or fire. When service or repair is required, contact us at: support_ework@yeah.net
- Disconnect the charger from the outlet before attempting any cleaning. This will reduce the risk of electric shock. Removing the battery pack will not reduce this risk.
- NEVER attempt to connect two chargers together.
- The charger is designed to operate on standard household electrical power (120 Volts). DO NOT attempt to use it on any other voltage.

2. Battery charger storage

- Put the charger in the room where the temperature is between 10 ℃and 22 ℃
- The battery charger should be stored in a dry environment, and prevent any possible moisture from entering.

BATTERY PACKS

1. Important safety instructions for battery packs

This manual contains important safety instructions for battery packs.
Before using the charger, read all instructions and cautionary markings on the battery pack. Before using the battery pack and charger, read the safety instructions below. Then follow the charging procedures outlined.
- Use equipment only with specifically designated battery packs. Use of any other battery packs may cause a risk of injury and fire.
- Recharge only with the charger specified by the manufacturer. A charger that is suitable for one type of battery pack may cause a risk of fire when used with another battery pack.
- DO NOT incinerate the battery pack even if it is severely damaged or is completely worn out. The battery pack could explode in fire. Toxic fumes and materials are created when battery packs are burned.
- DO NOT place the battery pack in water or let it get wet in the rain. Short circuit of battery will generate large current due to overheating and may cause fire or even breakdown.
- DO NOT charge or use the battery in explosive atmospheres, such as in the presence of flammable liquids, gases, or dust. Inserting or removing the battery from the charger may ignite dust or fumes.
- Charge the battery pack timely before it is completely exhausted. When the power of the equipment is found to be low, please stop using and charge the battery pack.
- Please charge the hot battery pack only after cooling it down.
- DO NOT recharge the battery pack that fully charges already. Overcharging will cut down its service life.
- Under abusive conditions, liquid may overflow in the battery. Please avoid contact. If battery contents encounter the skin, immediately wash the area with mild soap and water. If battery liquid gets into the eyes, wash eyes with clean water for 15 minutes or until irritation ceases. If medical attention is needed, the battery electrolyte for Lithium-Ion batteries is composed of a mixture of liquid organic carbonates and lithium salts.
- If the battery is damaged and used improperly, vapors may be emitted, the battery could explode. The vapors may irritate the respiratory system. Ensure the area is well ventilated and seek medical attention should you experience any adverse effects.
- If the battery runs shorter than usual, stop using it immediately. Otherwise, it may lead to overheating, fire and even explosion.
- When not using the battery pack, keep it away from other metal objects, like paper clips, coins, keys, nails, screws or other small metal objects. That can make a connection from one terminal to another. These objects may create short-circuit for the battery terminals causing burning or fire.

2. Battery protection system

- The battery pack is equipped with a tool/battery protection system that automatically cuts off the output power of the motor to extend the tool and battery life.
- While working, the tool may stop running when the tool and/or battery are in the following conditions. This is due to the activation of the protection system, not a tool failure.
- When the tool is overloaded: At this time, please release the trigger switch and remove the overload fault. When the tool does not work even after releasing the trigger switch, it is due to the automatic battery power stop function. Please charge the battery pack before use.
- When the remaining power of the battery becomes low: Please charge the battery pack.

WARNING: Burn hazard

Battery liquid may be flammable if exposed to spark or flame.

- Charge the battery packs only with the charger specified by the manufacturer.
- DO NOT splash or immerse in water or other liquids.
- DO NOT store or use the tool and battery pack in locations where the temperature may reach or exceed 105°F (40˚C) (such as outside sheds or metal buildings in summer).

WARNING: Fire hazard

DO NOT store or carry batteries in the condition that exposed battery terminals could contact metal objects.
For example, do not place batteries in aprons, pockets, toolboxes, product kit boxes, drawers, etc., with loose nails, screws, keys, etc. Transporting batteries can possibly cause fire if the battery terminals inadvertently encounter conductive materials such as keys, coins, hand tools. The US Department of Transportation Hazardous Material Regulations (HMR) prohibits transporting batteries in commerce or on airplanes (i.e., packed in suitcases and carry-on luggage). UNLESS they are properly protected from short circuits. Hence, when transporting individual batteries, make sure that the battery terminals are protected and well insulated from materials that could contact them and cause a short circuit.

NOTICE:

Lithium-Ion batteries should not be put in checked baggage.

WARNING:

- Never attempt to open the battery pack for any reason
- DO NOT crush, drop or damage the battery pack.
- If the battery pack case is cracked or damaged, do not insert it into the charger.
- DO NOT use the battery pack or charger that have been received a hard crush, been dropped, or damaged in any way (i.e., pierced with a nail, hit with a hammer, stepped on). If your batteries are damaged, contact us at: **support_ework@yeah.net**

3. Battery storage suggestion

- The best storage place is one that is cool and dry, away from direct sunlight and excess heat or cold.
- Long-term storage will not harm the battery pack or charger.

NOTICE:

Lithium-ion battery packs should not be constantly kept in the state that power is exhausted. When you don't use your batteries very often, charge the battery to approximately 50% capacity at least once every six months.

4. Important charging notes

- Longest life and best performance can be obtained if the battery pack is charged when the air temperature is between 65°F and 75°F (18°- 24°C). DO NOT charge the battery pack in an air temperature below +40°F (+4.5°C), or above +105°F (+40.5°C). This is important and will prevent serious damage to the battery pack.
- The charger and battery pack may become warm to the touch while charging. This is a normal condition and does not indicate a problem.
- To facilitate the cooling of the battery pack after use, avoid placing the charger or battery pack in a warm environment such as in a metal shed, or an uninsulated trailer.
- If the battery pack does not charge properly:

1. Check the current in the outlet by plugging in other appliance, for example a lamp.

2. Move charger and battery pack to a location where the surrounding air temperature is approximately 65°F-75°F (18°-24°C).
3. If charging problems persist, contact us at: **support_ework@yeah.net**. The battery pack should be recharged when it fails to produce sufficient power on jobs that were easily done previously. Follow the charging procedure. You may also charge a partially used pack whenever you desire with no adverse effect on the battery pack.

WARNING: Shock Hazard
DO NOT allow any liquid to get inside the charger. Never attempt to open the battery pack for any reason.

ABOUT WARRANTY

Q: Do you have warranty for this product?

A: We strictly abide by the Amazon regulations which cover a full refund or a free replacement within 30 days since your purchase. Additionally, we offer a one-year warranty, if there are any problems with this product, please always feel free to contact us at **support_ework@yeah.net**. We promise our team always stands behind our product and we will try our best to offer you a better user experience.

No.20251128


EWORK®

SAFETY GUIDELINES