REVOLUTION™

4 BURNER

FLARE FREE TECHNOLOGY™

ASSEMBLY MANUAL

85-3167-4 (G53208)

LIMITED 5-YEAR WARRANTY

Read and save manual for future reference.

Assemble your barbecue immediately. Missing or damaged parts should be claimed within 30 days of purchase.

For product inquiries, parts, warranty and troubleshooting support, please call 1-800-275-4617.

www.colemanbbqs.com

Manual Revision #: 01222021JC

HEAVY ARTICLE NEEDS 2 TO LIFT

THIS MANUAL MUST REMAIN WITH THE PRODUCT AT ALL TIMES

To ORDER non-warranty replacement parts or accessories, or to register your warranty, please visit us on the web at **www.colemanbbqs.com**

⚠ CAUTION

Sharp edges. Wear gloves when assembling your barbecue.

⚠ CAUTION

Read and follow all safety statements, assembly instructions, use and care directions before attempting to assemble and cook.

⚠ INSTALLER OR ASSEMBLER/ CONSUMER

This manual should be kept with the barbecue at all times.

⚠ WARNING

Failure to follow all of the Manufacturer's instructions could result in hazardous fires, explosions, property damage, or serious personal injury or even death.

Follow all leak check procedures carefully prior to operation of barbecue, even if grill was dealer assembled. Do not try to light this barbecue without reading the Lighting Instructions section of this manual.

⚠ DANGER

1. If you smell Gas:
   a. Shut off gas to the appliance
   b. Extinguish any open flame
   c. Open lid
   d. If oduor continues, keep away from the appliance and immediately call your gas supplier or your fire department
2. Requires two people to complete the assembly process.
3. Beware of sharp edges.

⚠ WARNING

1. Do not store or use gasoline or other flammable liquids or vapours in the vicinity of this or any other appliance.
2. An LP cylinder not connected for use shall not be stored in the vicinity of this or any other appliance.

⚠ WARNING

IN DIRECT SUN, AND IN OPERATION, YOUR BARBECUE'S STAINLESS STEEL AND PAINTED STEEL PARTS CAN BECOME VERY HOT.

THIS BARBECUE IS FOR OUTDOOR USE ONLY

CONTACT CALL CENTRE IF ANY PARTS ARE MISSING
1-800-275-4617

HARDWARE PACK

TOOLS NEEDED FOR ASSEMBLY

- #2 Phillips screwdriver (long and short)
- 1/4" Slotted screwdriver (long and short)
- Adjustable wrench
- Pliers

No.	Description	Part Number	Qty.
1	1/4-20UNCx38 Screw	20120-13038-250	6
2	1/4-20UNCx16 Screw	20120-13016-250	26
3	NO.10-24UNC x13 Screw	20124-10013-250	18
4	NO.8-32UNC x18 Screw	20132-08018-250	2
5	NO.8-32 X 3/8, Philips Flat Head	20332-08010-250	3
6	ST4.2X10 Tapping Screw	22500-42010-137B	9
7	φ7 Fiber washer	G501-0054-9100	10
8	1/4"-20UNC Nut	30220-13000-250	2
9	NO.8-32UNC Nut	30232-08000-250	2
10	Knob	G532-3600-9000	1
11	M4 Wing Nut	33301-04000-032	1
12	Venturi Clip, Side Burner	G405-0019-9200	1
13	Wheel Lock Pin	G350-0026-9000	1
14	AA Battery	G610-0028-9100	1

Caution:
Sheet metal can cause injury. Wear gloves when installing the barbecue.

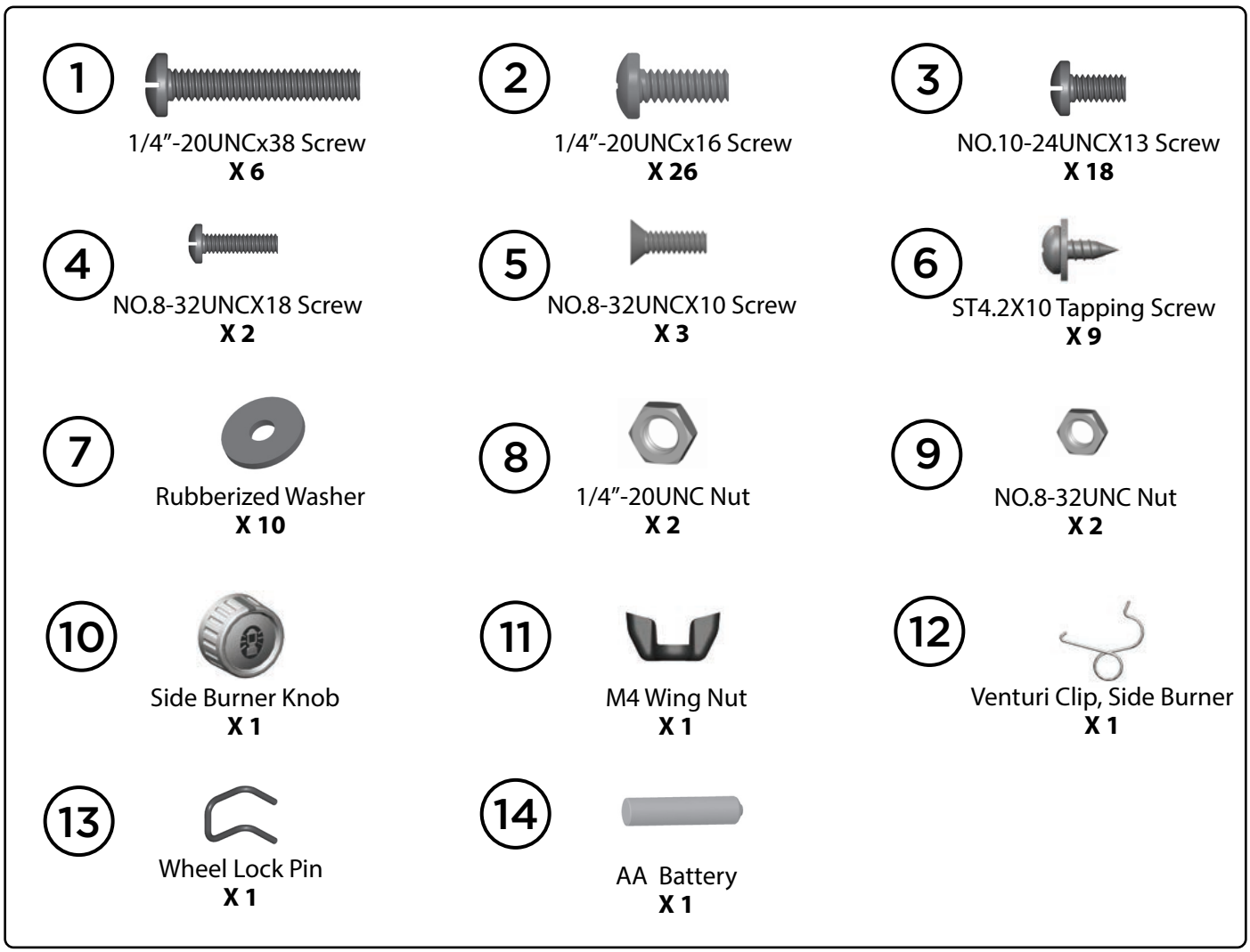

BEFORE ASSEMBLING THIS BARBECUE, READ THE INSTRUCTIONS CAREFULLY.

Assemble the barbecue on a flat, clean surface. Grill is heavy. Two people are recommended to assemble this barbecue.

PARTS LIST FOR 85-3167-4 (G53208)

Item No.	Qty.	Description	Part No.
AA	1	Top Lid Assembly	G532-2500-02
AB	1	Lid Handle	G532-0004-02
AC	1	Thermometer	G532-0007-01
AD	1	Thermometer Bezel	G532-0006-01
AE	2	Screw, Top Lid	G466-0007-01
AF	2	Lid Bumper, Front	G527-0002-02
AG	2	Lid Bumper, Rear	G303-0038-01
BA	1	Burner Box Assembly	G532-2700-01
BB	4	Main Burner	G532-3500-01
BC	3	Carryover Assembly	G614-0095-01
BD	4	Heat Distribution Plate	G532-0016-01
BE	1	Grease Channel	G532-0015-01
BF	3	Upper Cooking Grate	G532-0081-01
BG	1	Cleaning Tool	G532-0083-01
BH	1	Warming Rack	G532-0018-01
BI	1	Match Holder	G501-0068-01
BJ	1	Grease Channel Shield	G532-0063-01
BK	3	Lower Cooking Grate	G532-0080-01
BL	4	Main Burner Brace	G466-0047-01
CA	1	Manifold Assembly	G532-9700-01
CB	1	Regulator	G606-0008-01
CC	1	Side Stove Valve	G532-0072-01
CD	1	Metal Hose, Side Stove	G401-0068-01
CE1	1	Electronic Ignition Assembly	G532-0019-01
CE2	1	Ignition Battery Cover	G532-0019-02
CE3	1	Instastart™ Ignition Button	G532-0082-01
CF	1	Electrode Set, Main Burner	G515-0067-01
CG	5	Control Knob	G532-3600-01
CH	5	Knob Bezel	G363-0026-01
CI	1	Control Panel	G532-0076-01
CJ	1	Front Brace	G532-9000-01
CK	1	Grease Cup - Burner Box	G416-0015-01
CL	2	Grease Cup Rails	G466-0034-01
CM	1	Upper Back Panel	G532-0067-01
CN	1	Lower Back Panel	G532-0066-01
CO	1	Heat Shield - Burner Box	G532-0023-01
CP	1	Heat Shield - Tank	G532-0033-01
CQ	1	Tank Exclusion Wire	G532-0077-01

Item No.	Qty.	Description	Part No.
DA	1	Side Stove Side Shelf, Left	G532-0900-01
DB	1	Side Shelf Fascia, Left	G532-C800-01
DC	1	Side Shelf Table Rear Brace, Left	G532-1300-01
DD	1	Side Stove Burner	G532-5200-01
DE	1	Side Stove Support Drip Pan	G515-0083-03
DF	1	Electrode Set, Side Stove	G515-0039-02
DG	1	Side Stove Lid	G532-0029-01
DH	1	Side Stove Cooking Grate	G501-0077-01
DI	1	Side Shelf Table, Right	G532-0030-01
DJ	1	Side Shelf Fascia, Right	G532-A800-01
DK	1	Side Shelf Table Rear Brace, Right	G532-1700-01
DL	1	Grease Cup Holder - Flare-Free	G532-0031-02
DM	1	Grease Cup - Flare-Free	G532-0031-02
EA	1	Cart Side Panel, Left	G532-1000-02
EB	1	Cart Side Panel, Right	G532-1100-02
EC	1	Left Door Assembly	G532-A100-01
ED	1	Right Door Assembly	G532-A200-01
EE	2	Door Handle	G532-0026-01
EF	1	Bottom Shelf	G532-0600-02
EG	2	Locking Castor	G350-0023-01
EH	2	Castor	G350-0024-01
EI	2	Door Magnet Assembly	G527-0037-01
F1	1	Hardware Pack	G532-B007-01
F2	1	Assembly Manual	G532-M008-01
F3	1	Safe Use and Care Manual	G363-M003-02
F4	1	Tank Screw	G505-0047-01

EXPLODED DIAGRAM FOR 85-3167-4 (G53208)

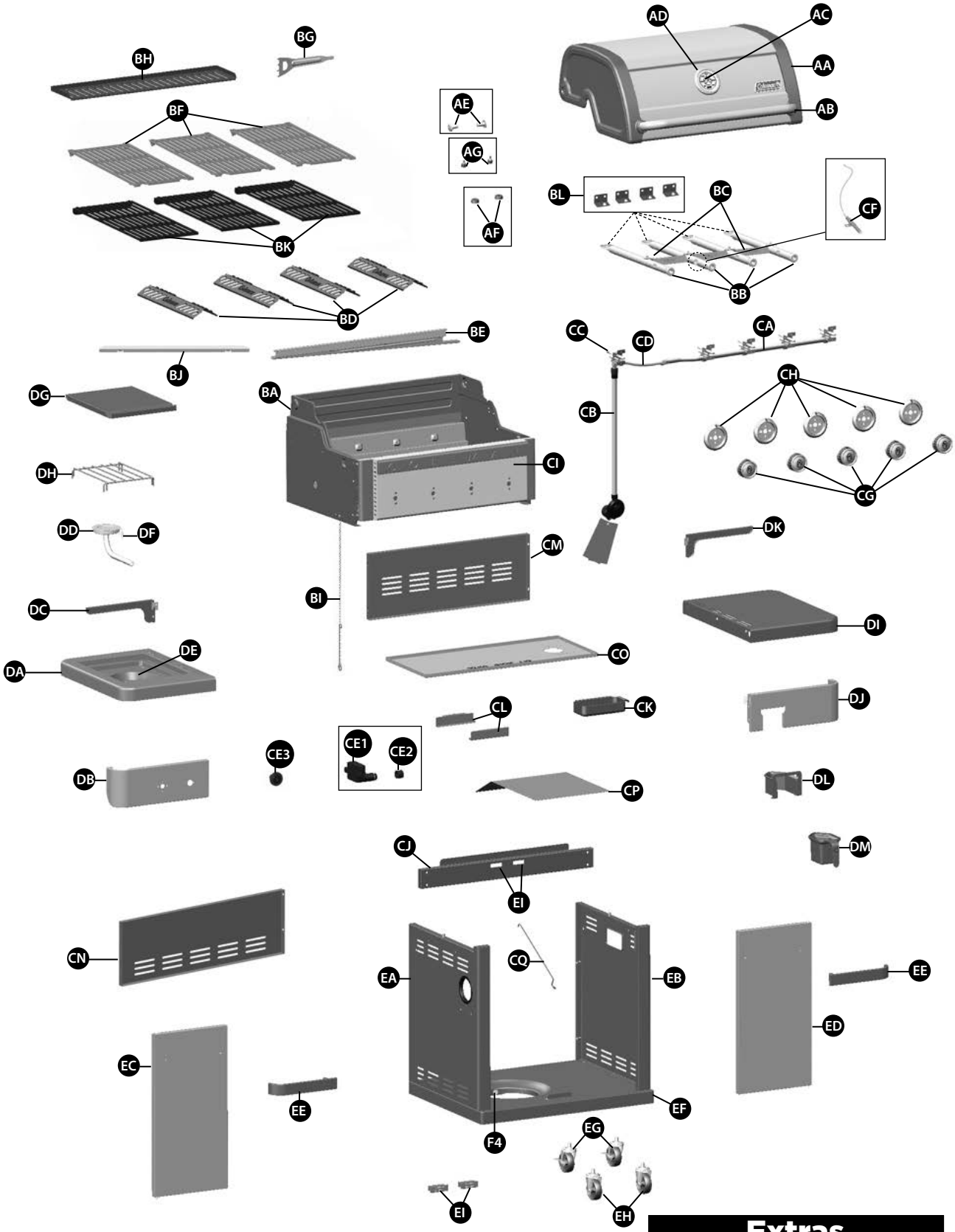

Extras

Hardware Pack F1	Assembly Manual F2	Safe Use & Care Manual F3

1

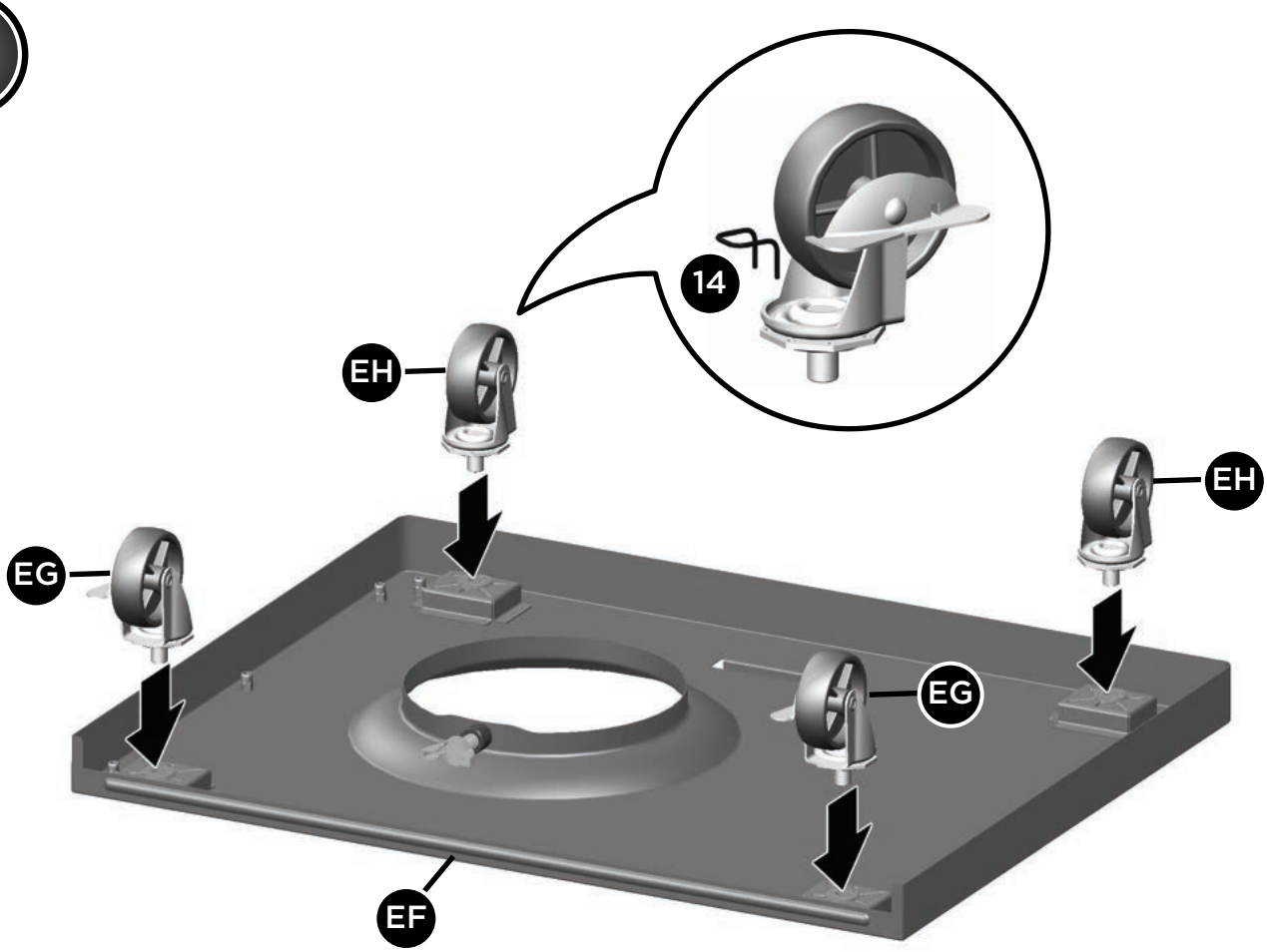

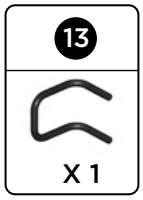

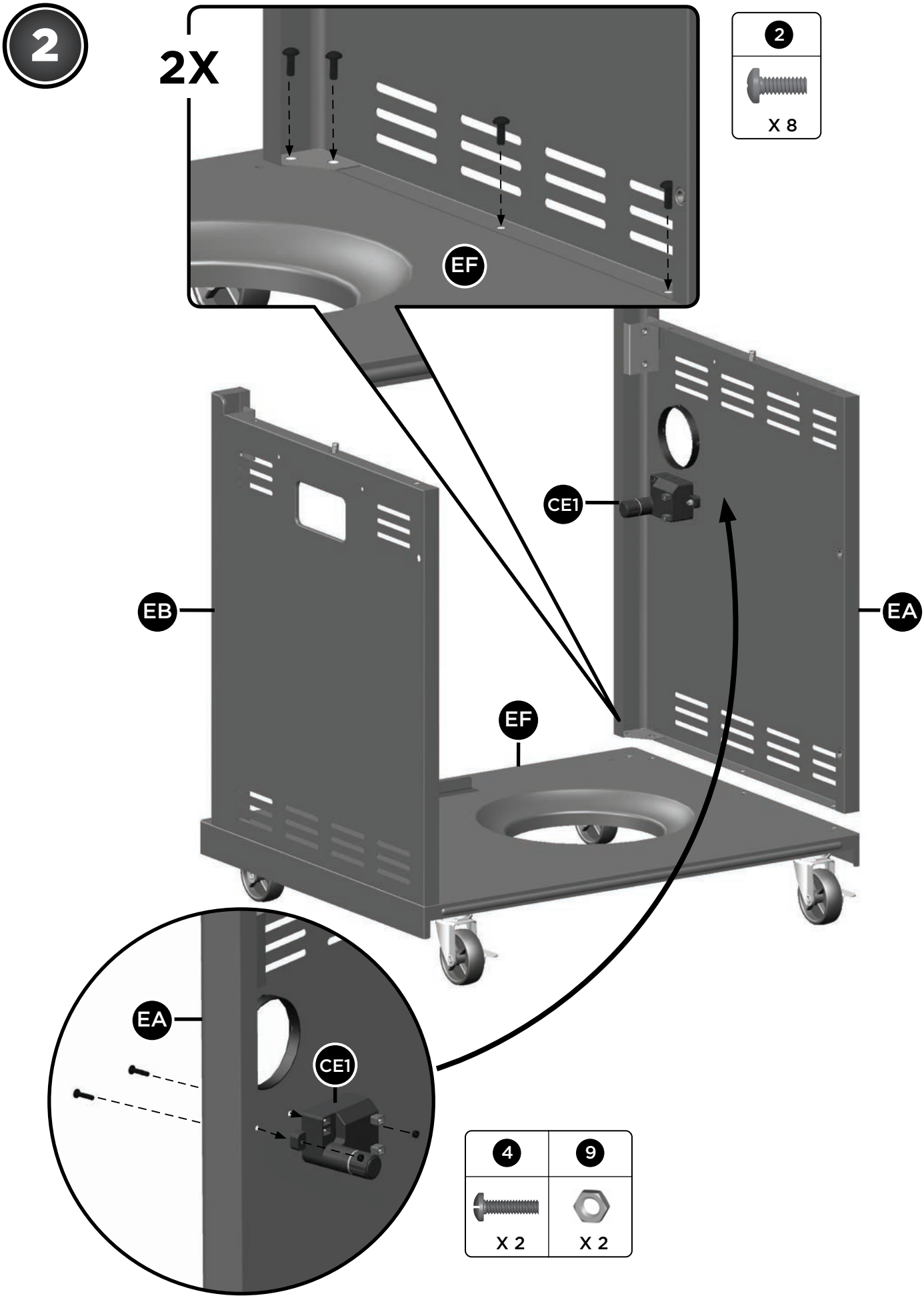
2
2X
EF
2
X 8
CE1
EB
EA
EF
EA
CE1
4
X 2
9
X 2

3

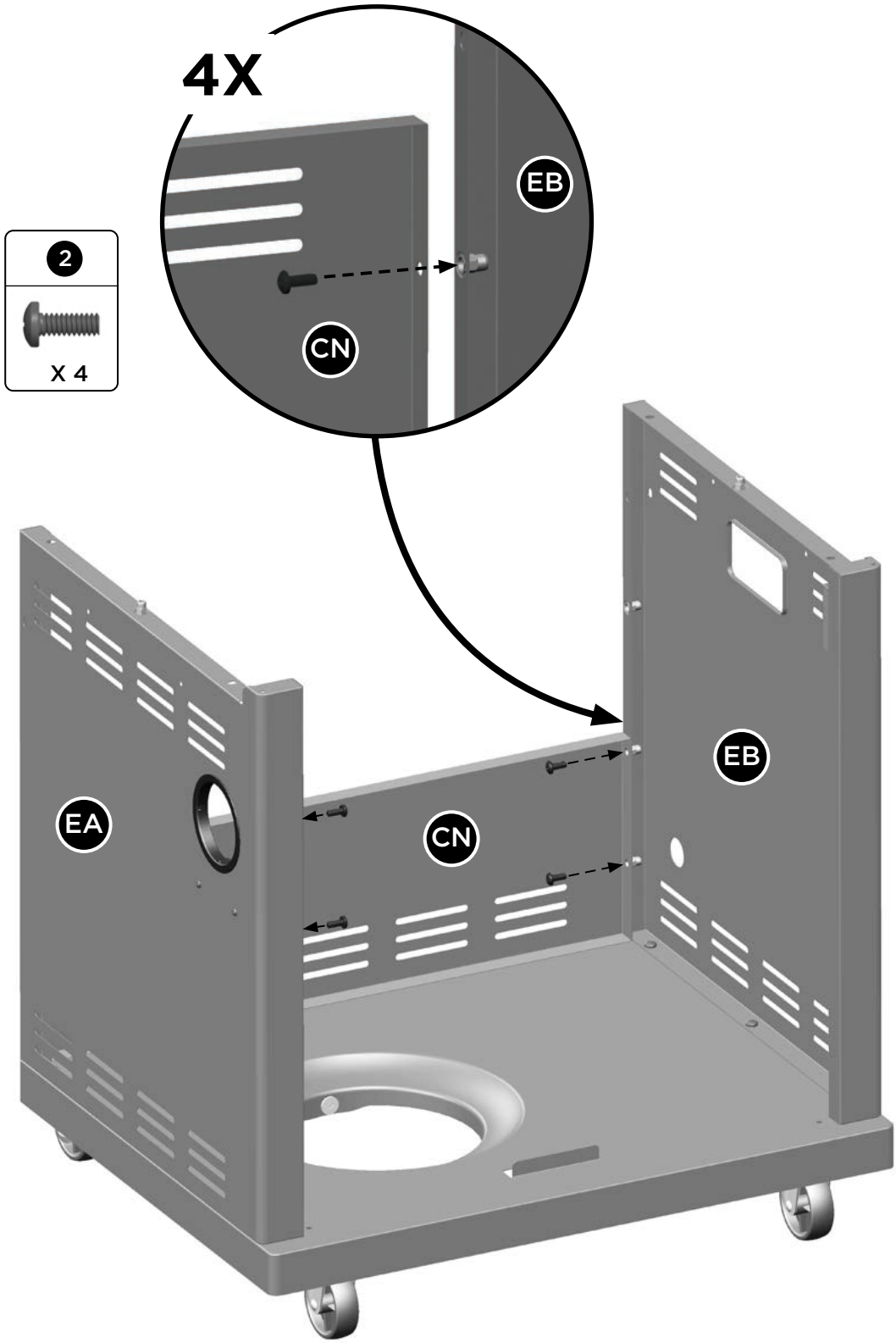

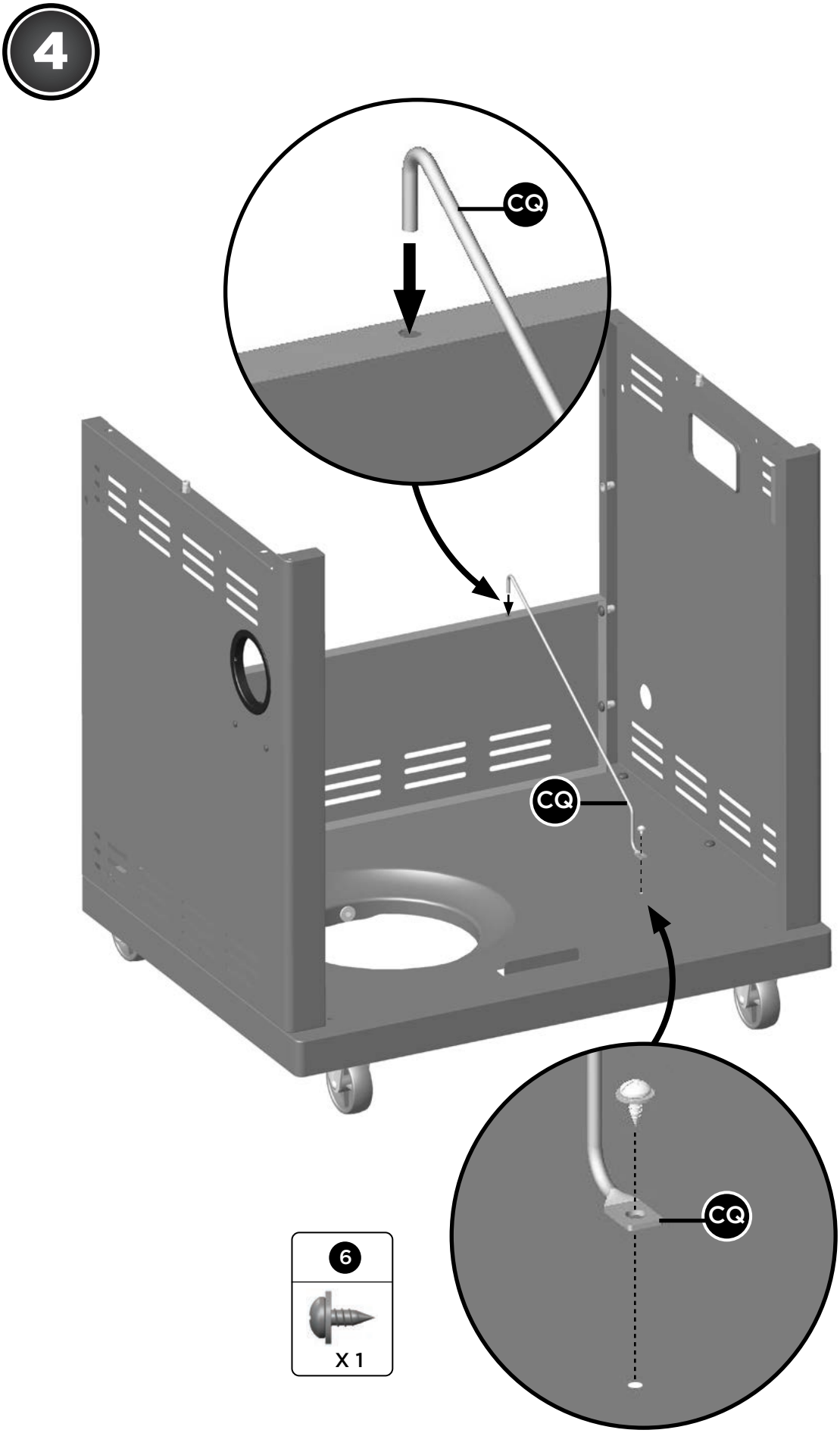
4
CQ
CQ
CQ
6
X 1

5

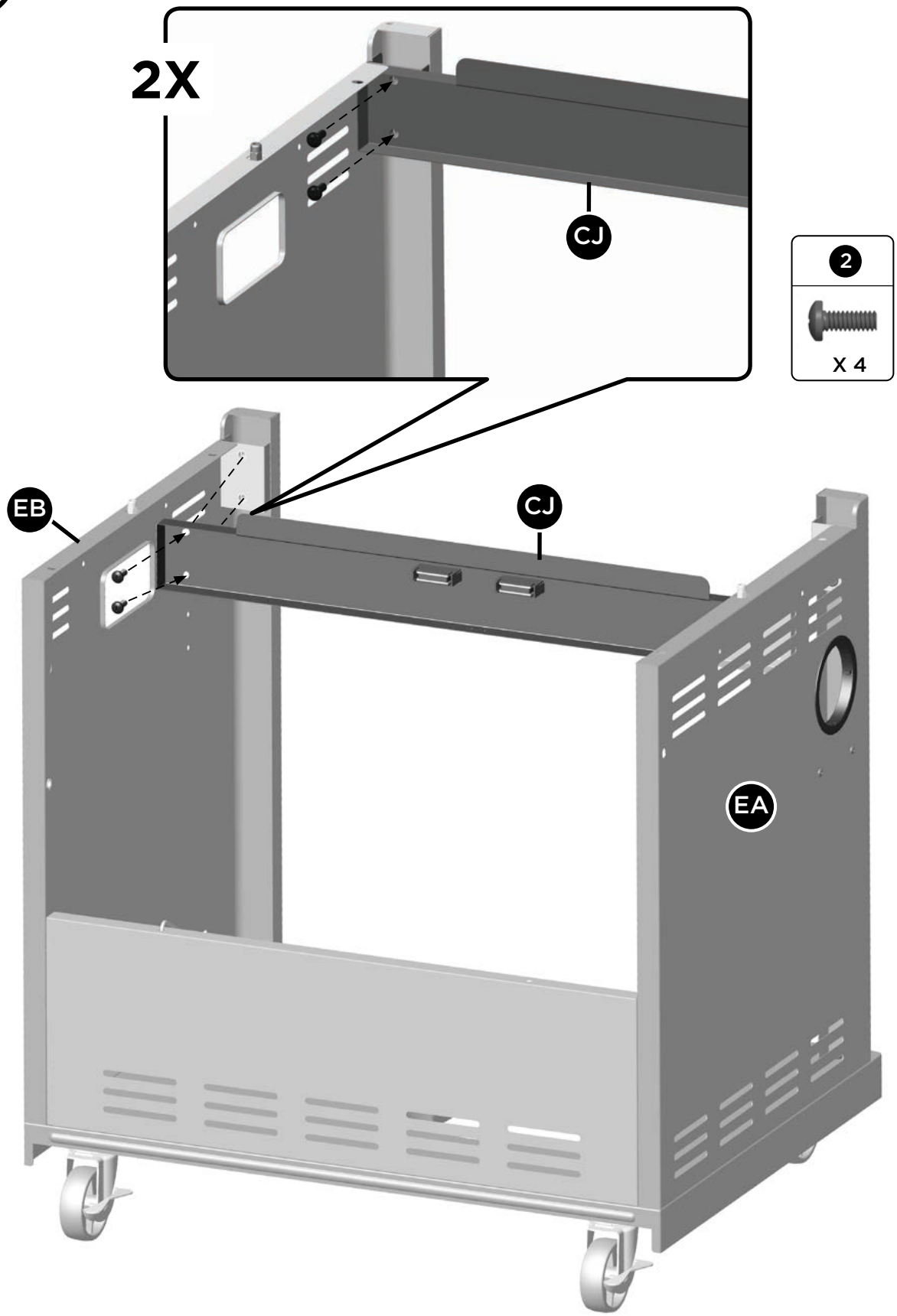

6

A.

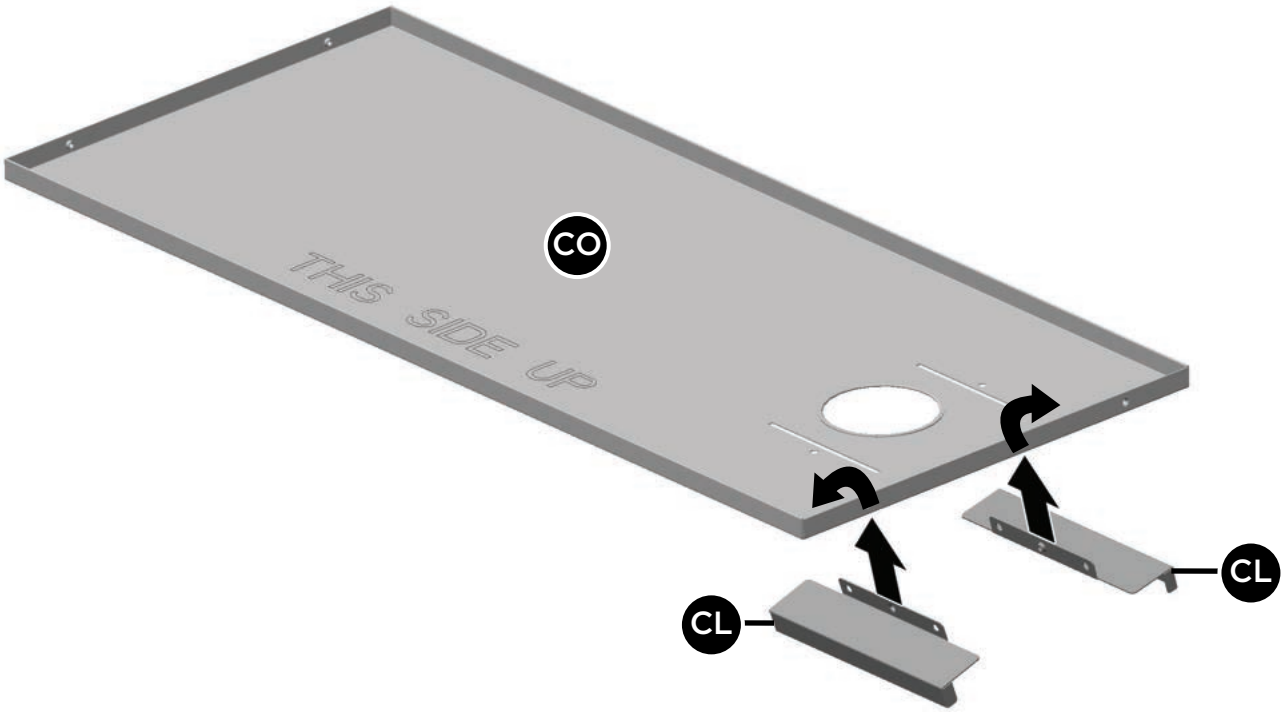

B.

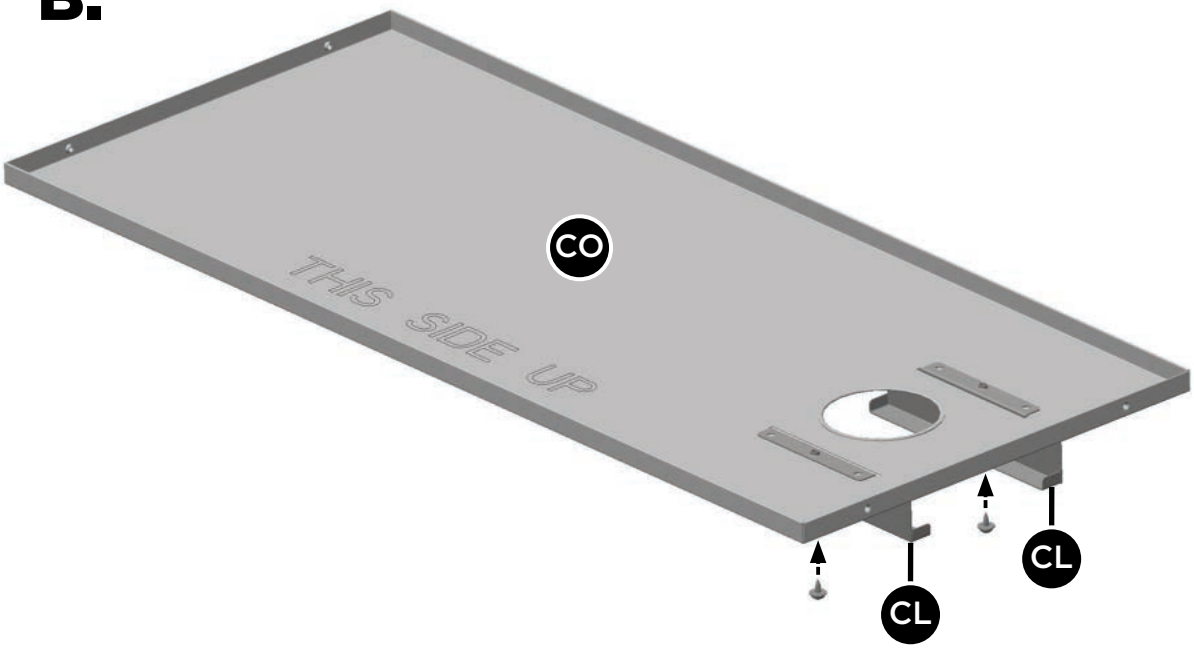

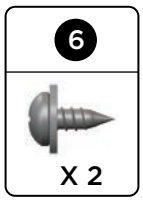

6

C.

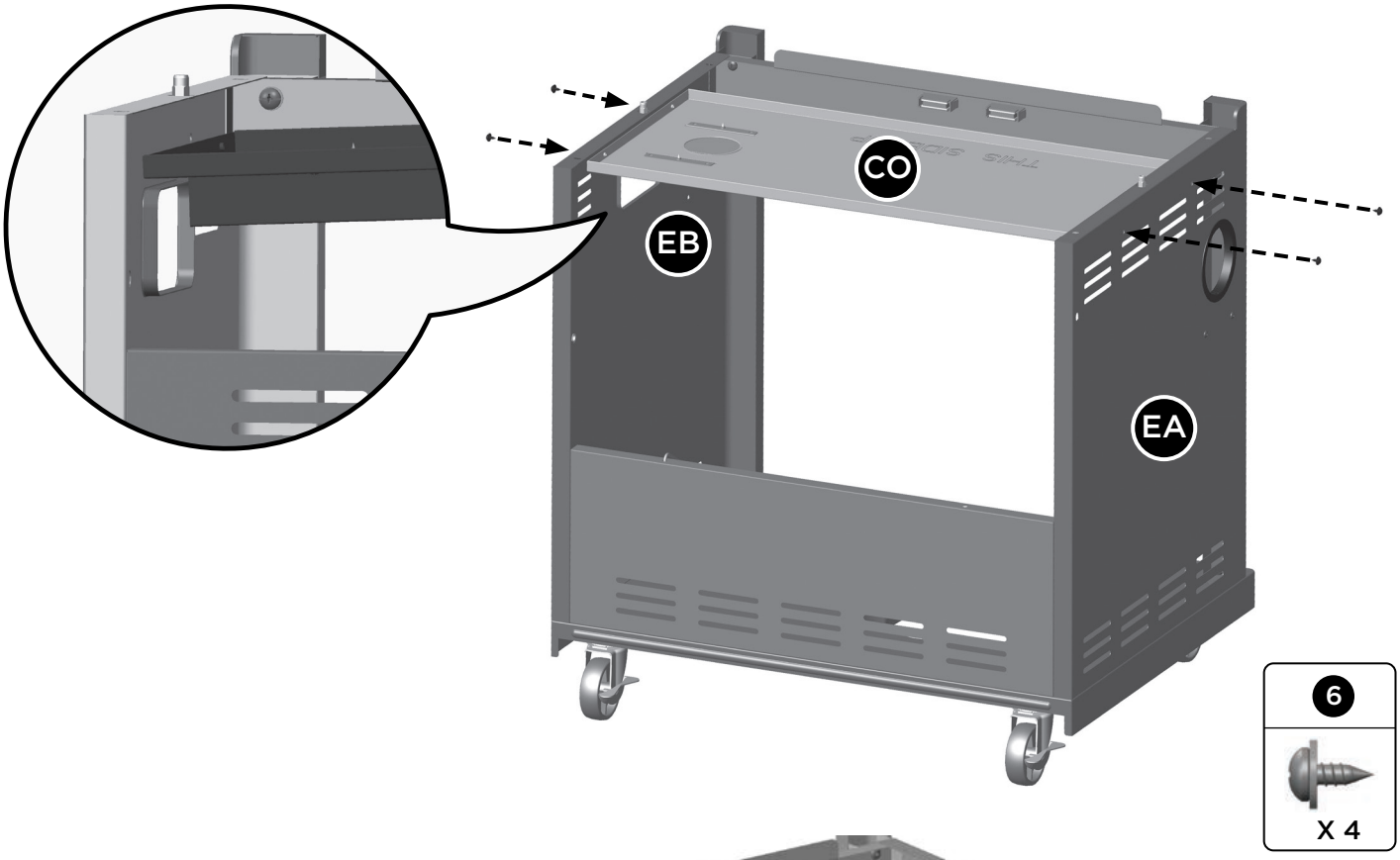

D.

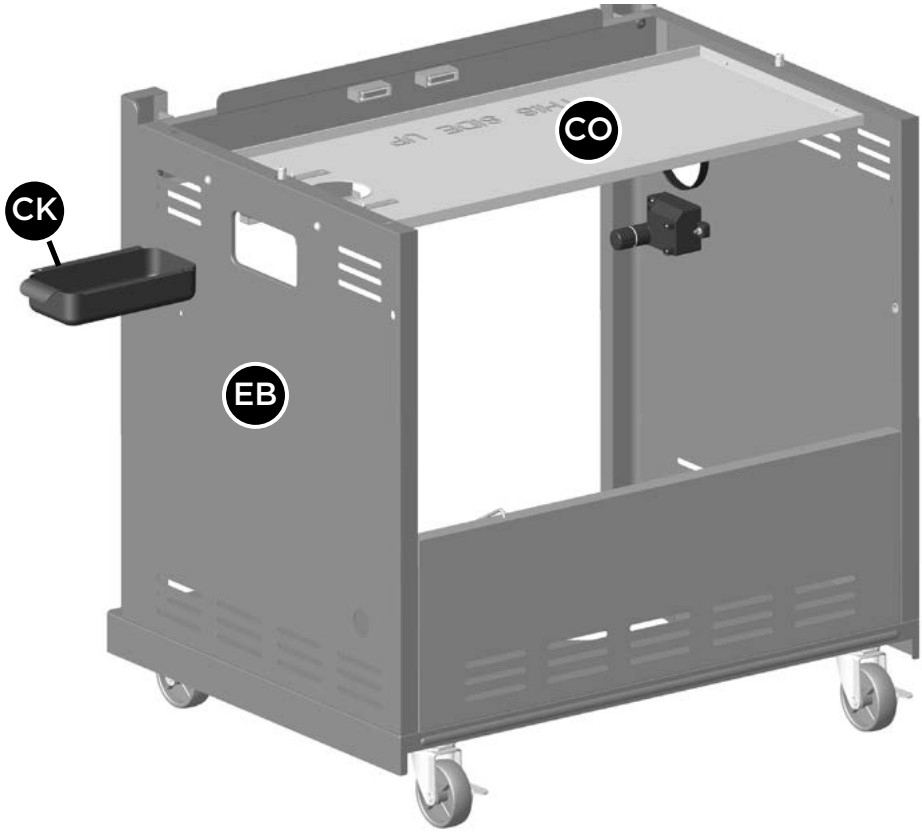

7

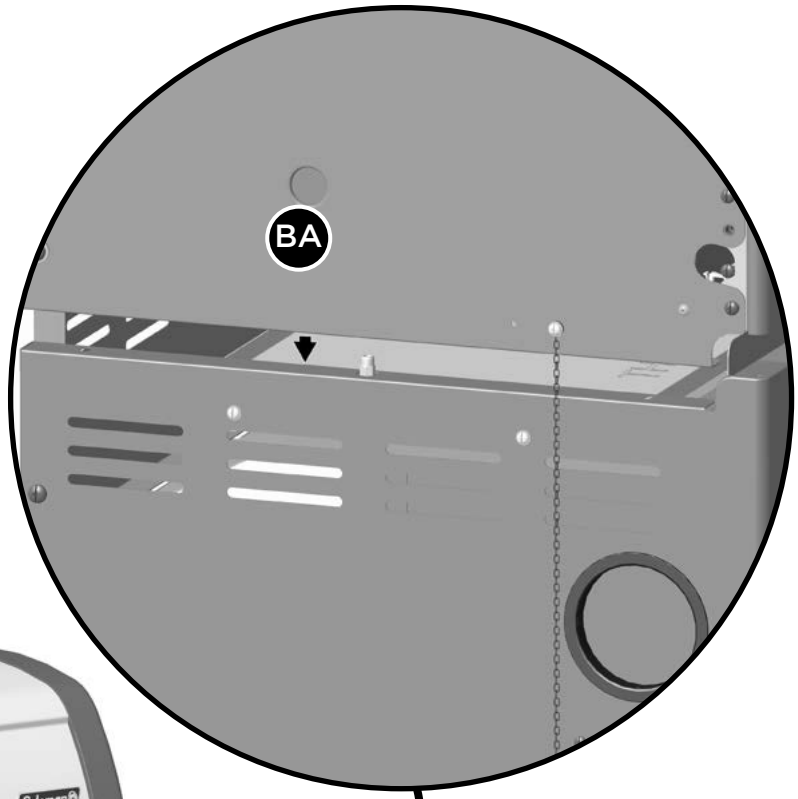

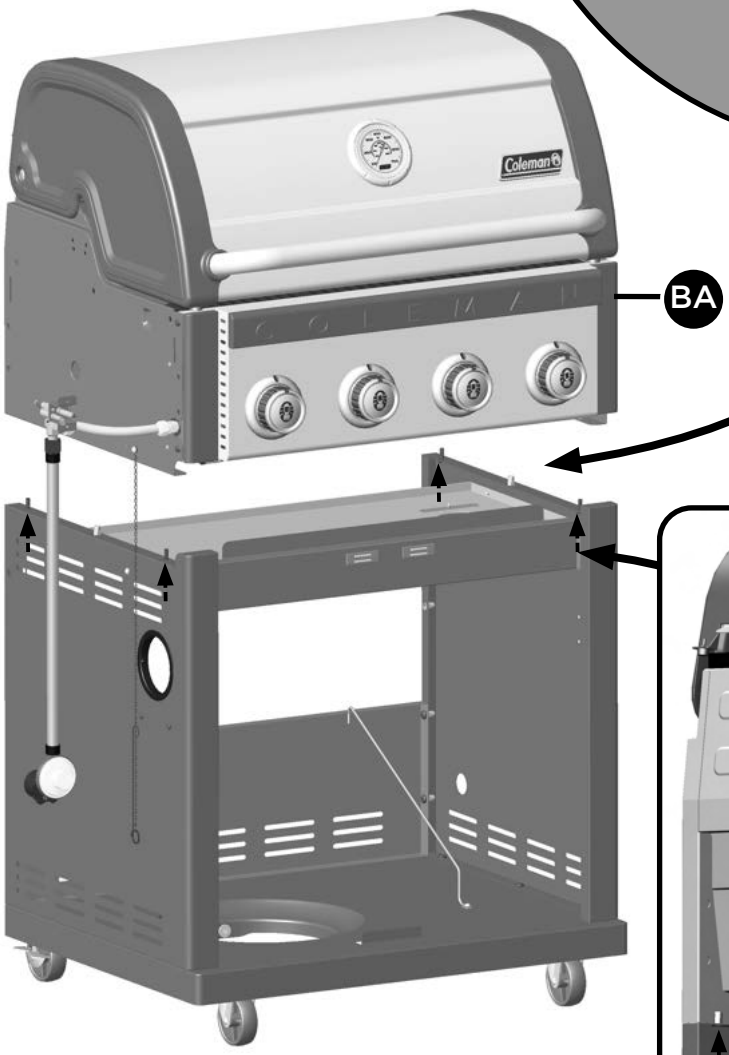

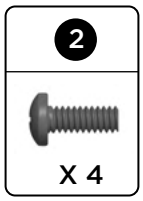

2X

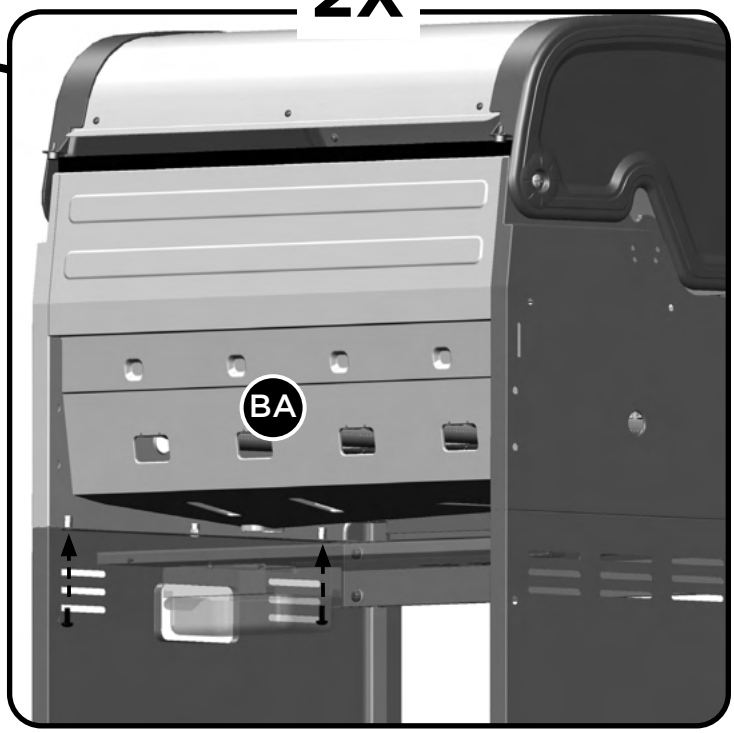

⚠ WARNING:
WATCH YOUR HANDS!

8

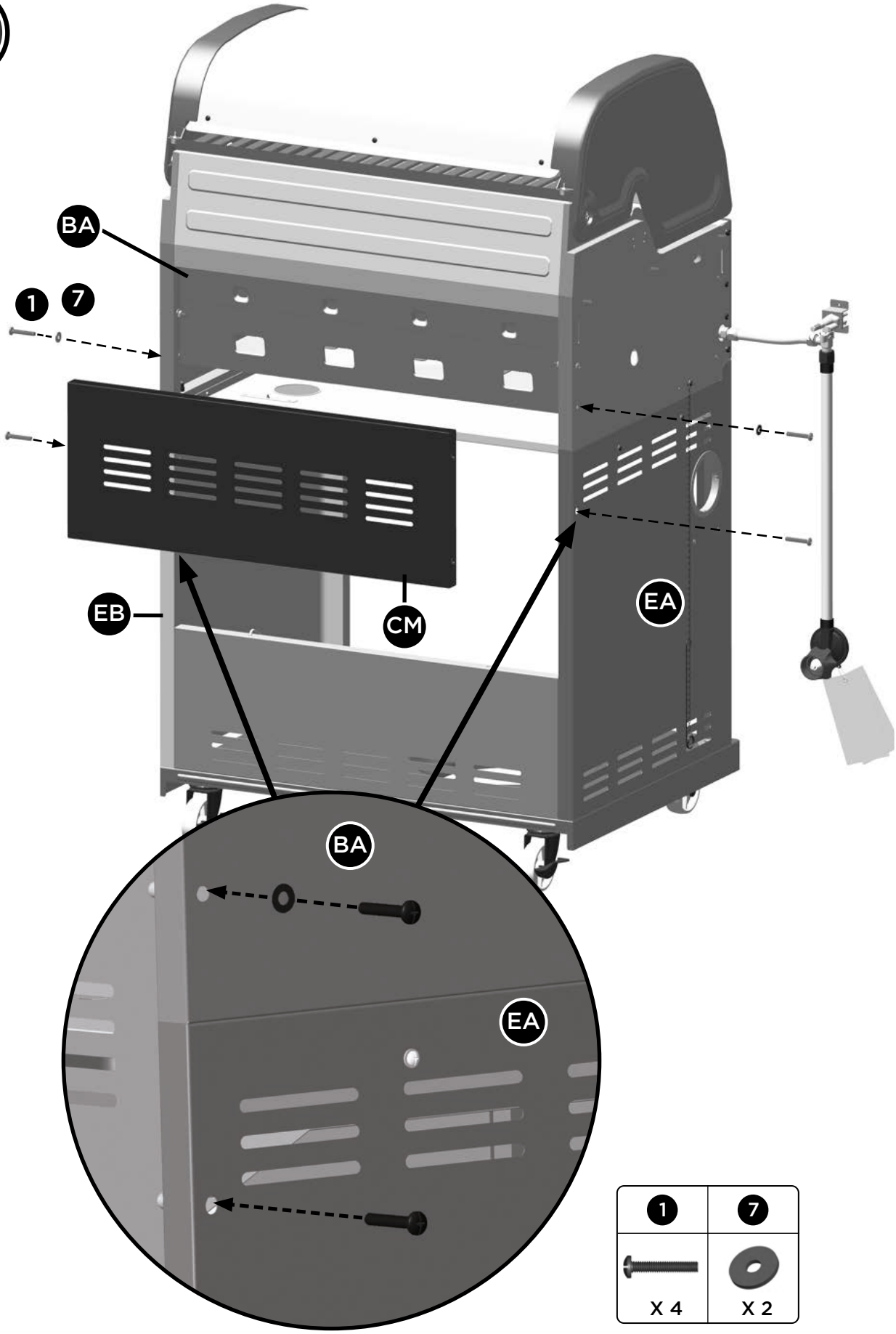

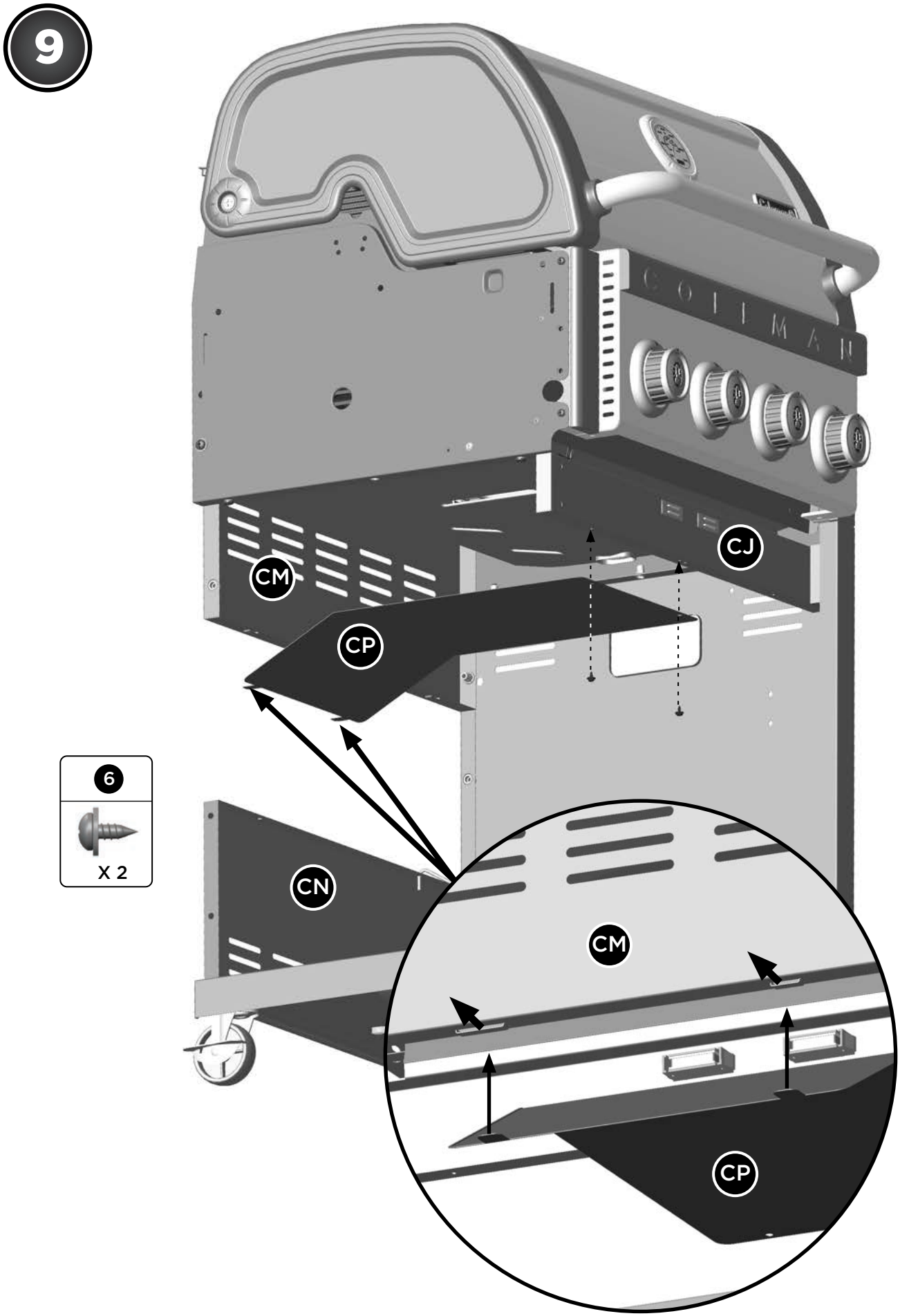
9
CJ
CM
CP
CN
CM
CP
6
X 2

10

A.

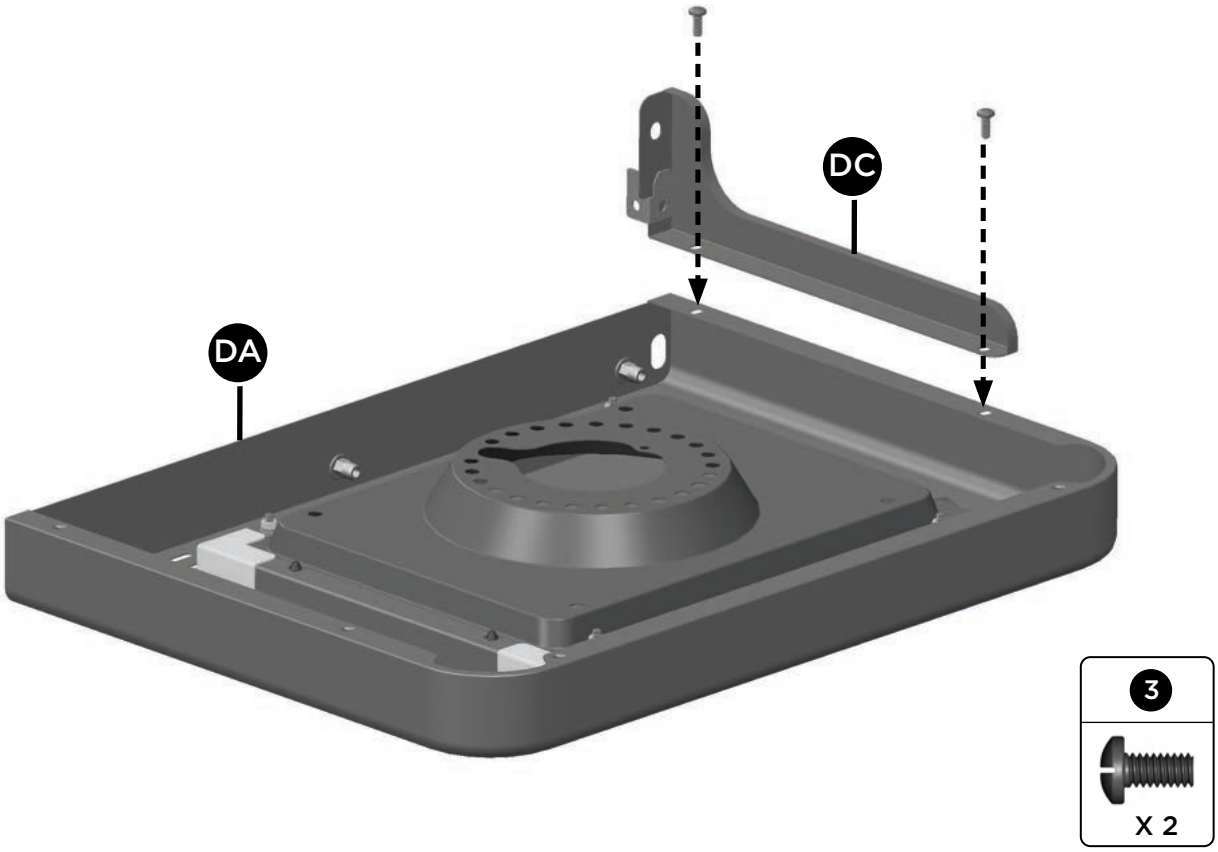

B.

11

A.

DA

BA

DA

B.

DA

BA

TIP:
Ensure that the rubber side of the rubberized washer makes contact with the burner box.

2	7
X 3	X 3

11

C.

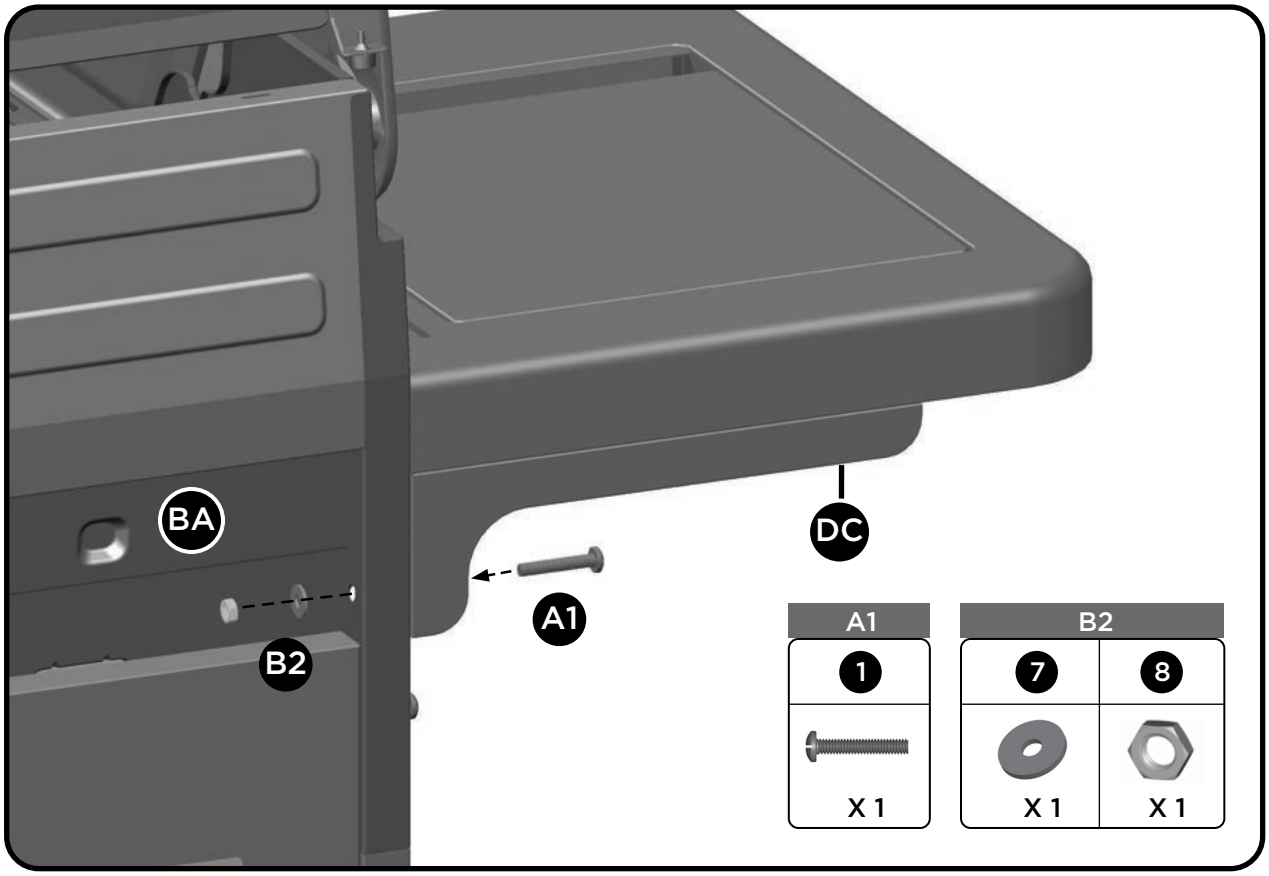

D.

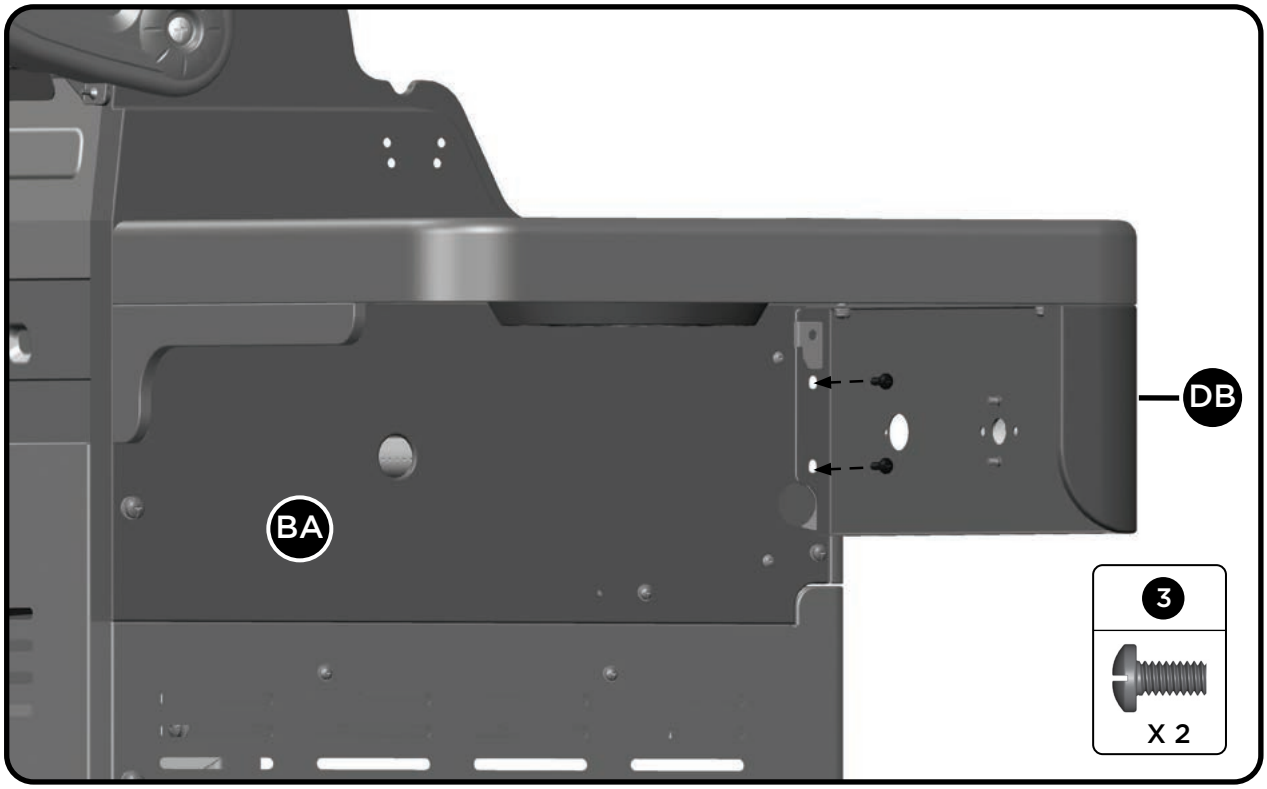

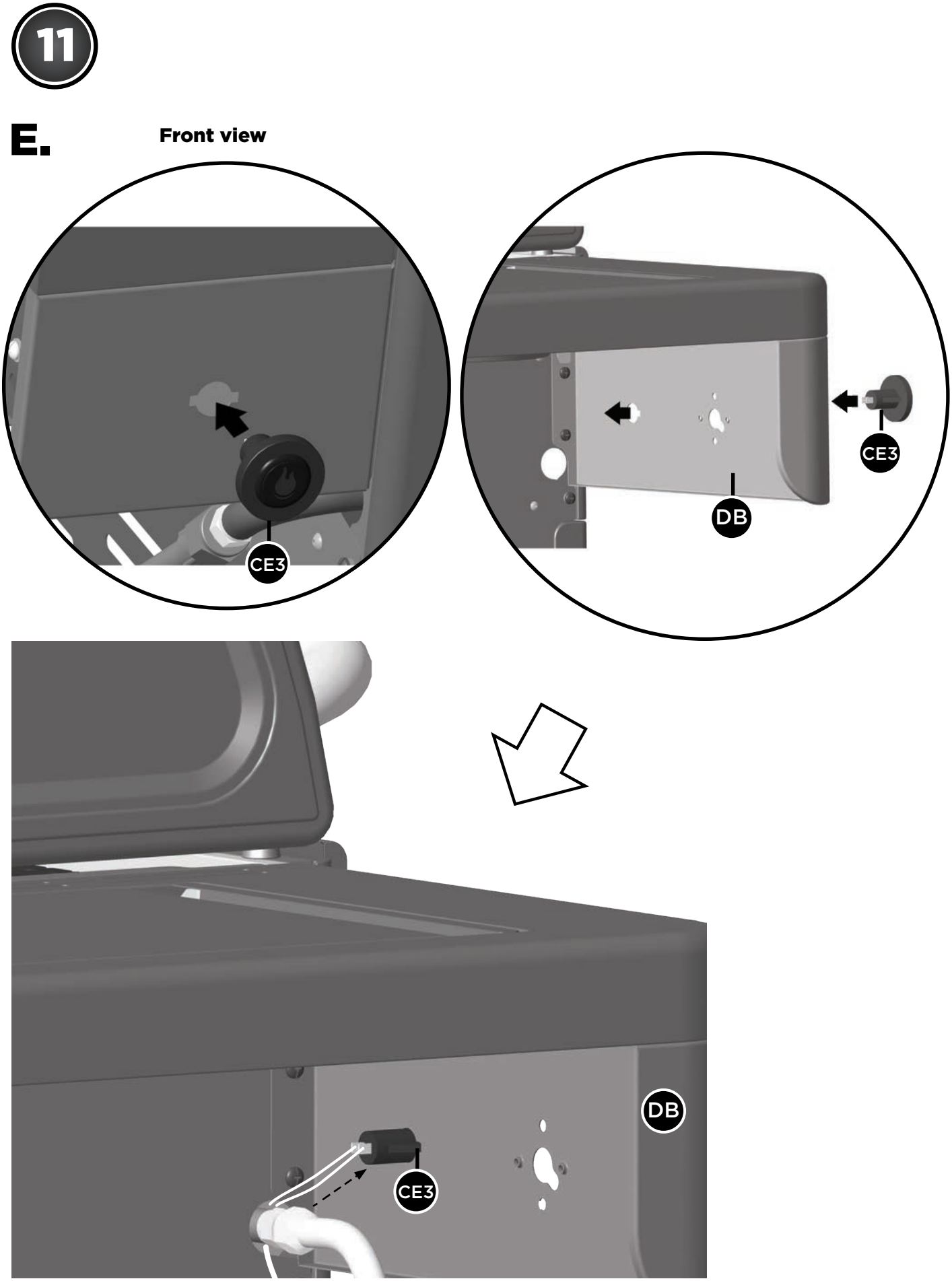
11
E.
Front view
CE3
CE3
DB
DB
CE3

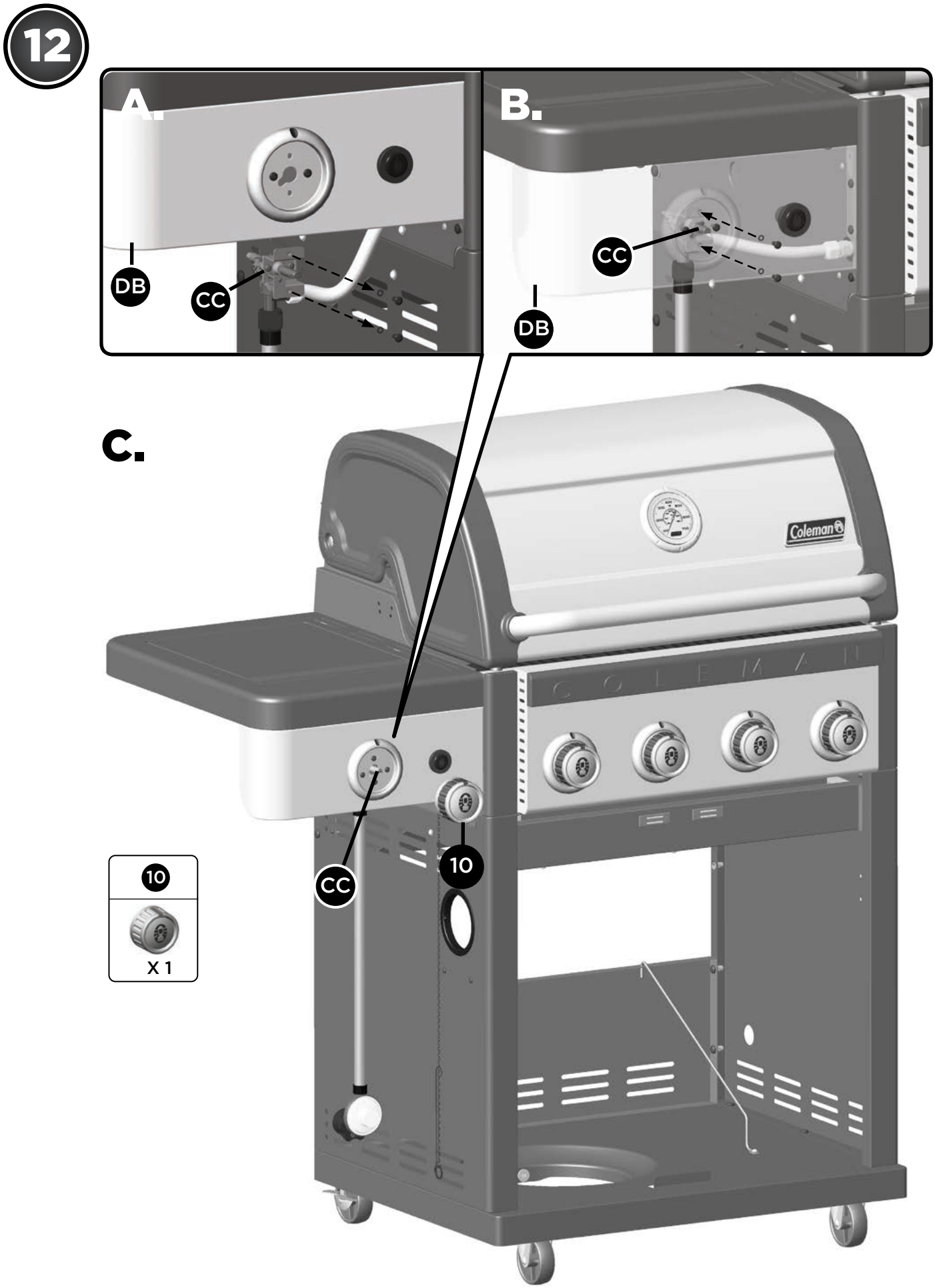
12
A.
DB
CC
B.
CC
DB
C.
Coleman
CC
10
10
X 1

12

D.

DD

E.

DE

DD

F.

DE

DD

DF

12

11

X 1

12

X 1

12

H.

13

14

X 1

Electronic Ignition Assembly:

The electrode set for main burner (CF), side stove (DF) and Instastart button (CE3) are found under the control panel (CI) attached to the manifold (CA). Insert the electrode sets into the electronic ignition (CE1)

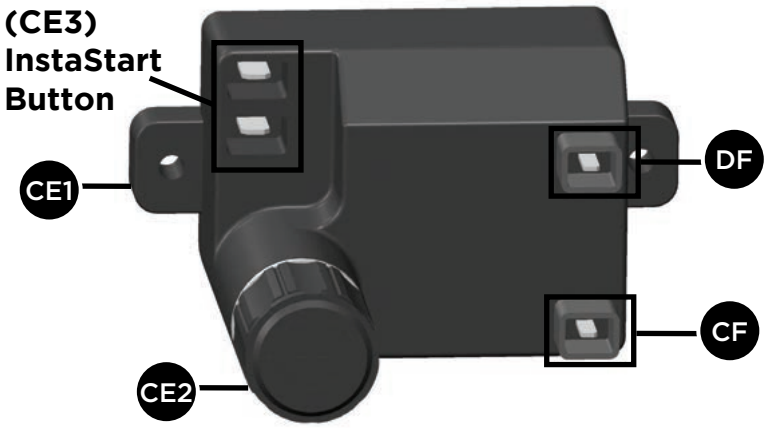

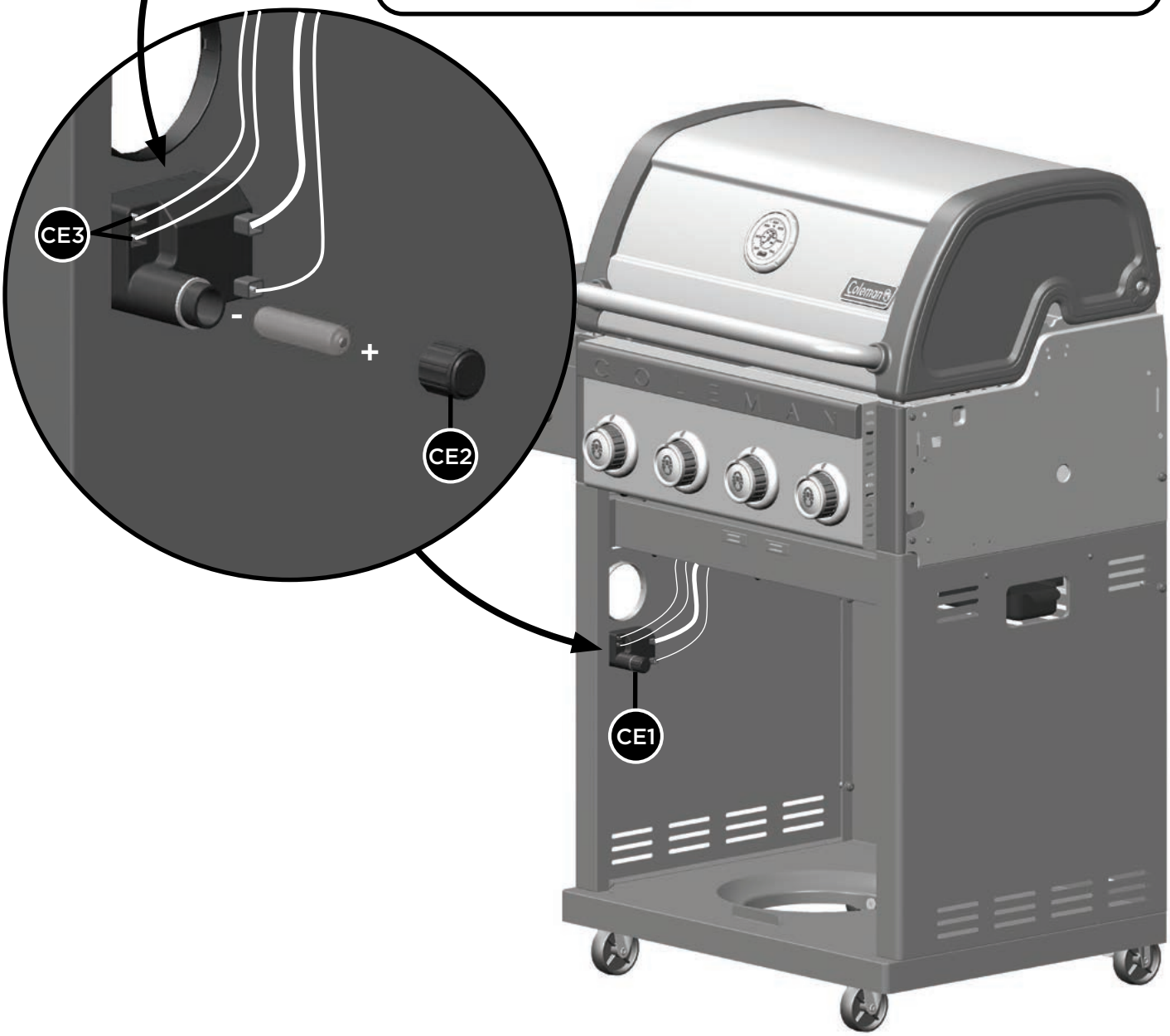

14

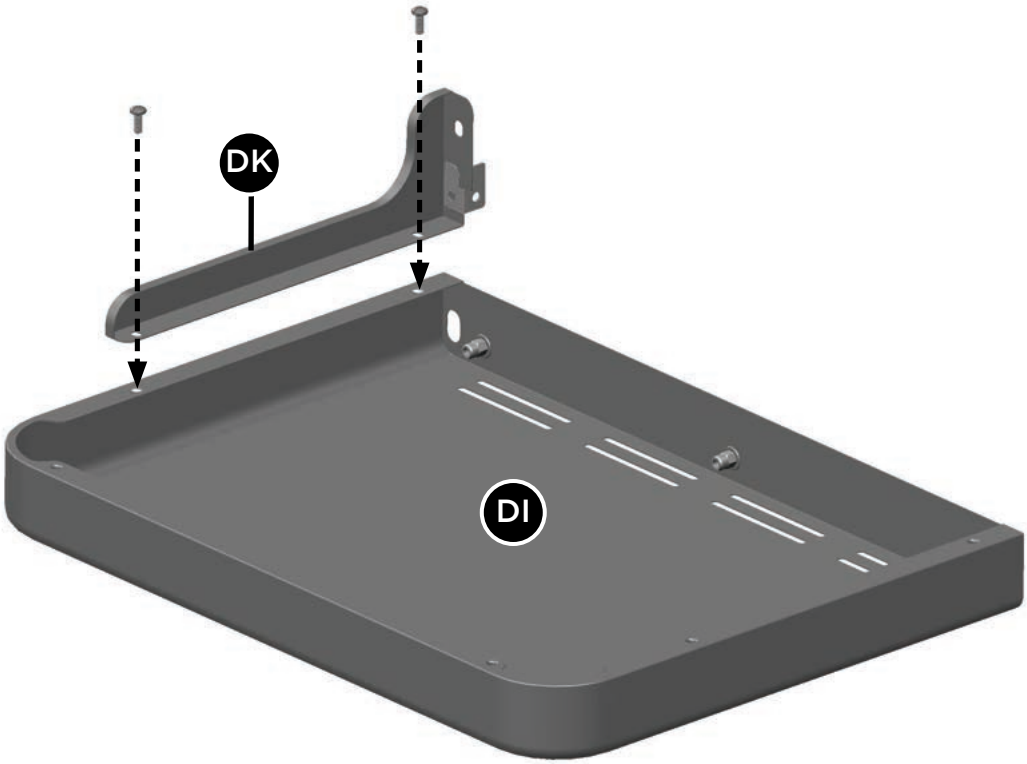

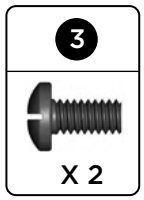

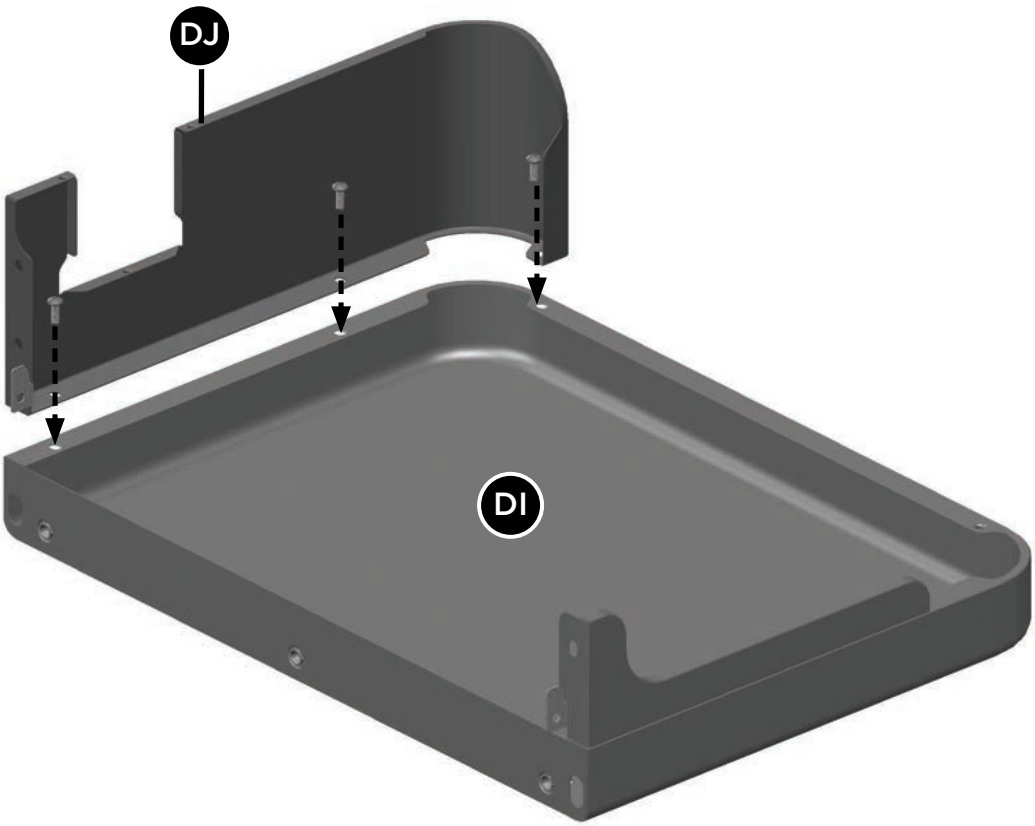

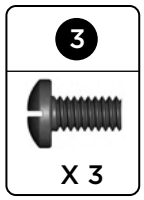

15

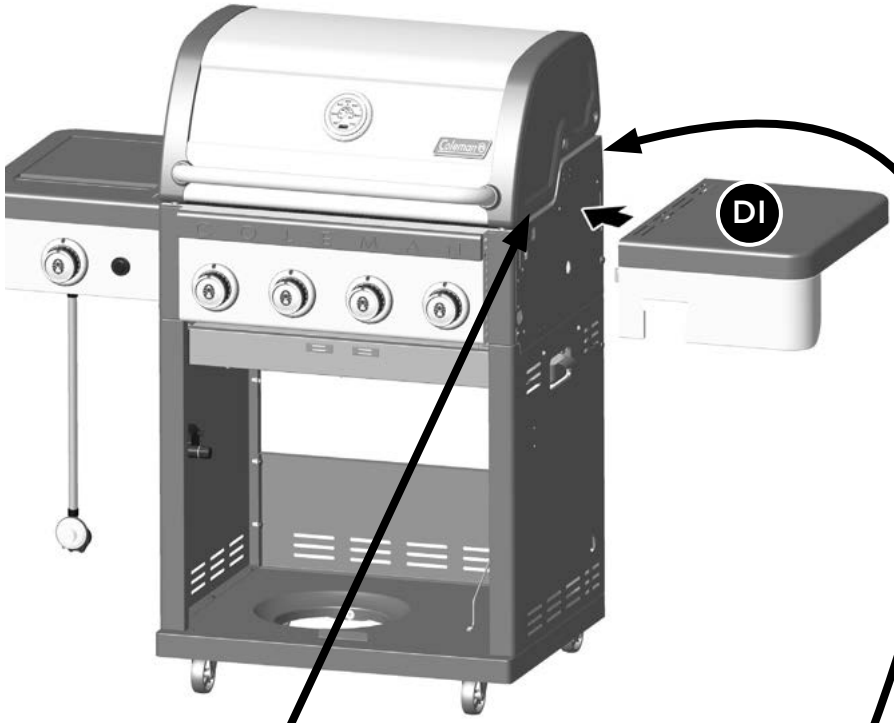

2	7
X 3	X 3

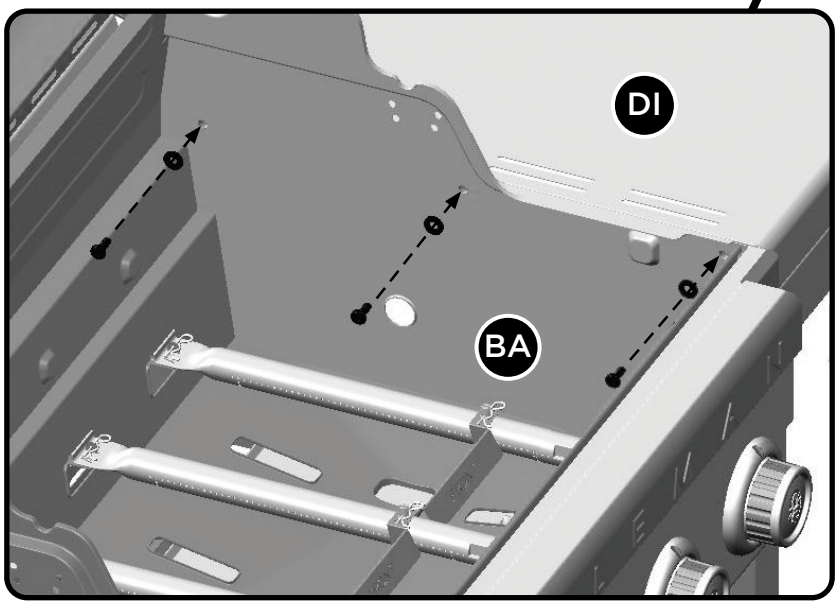

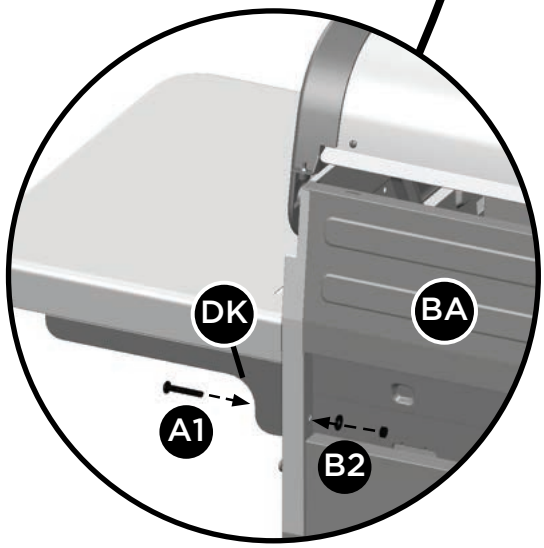

A1	B2	
1	7	8
X 1	X 1	X 1

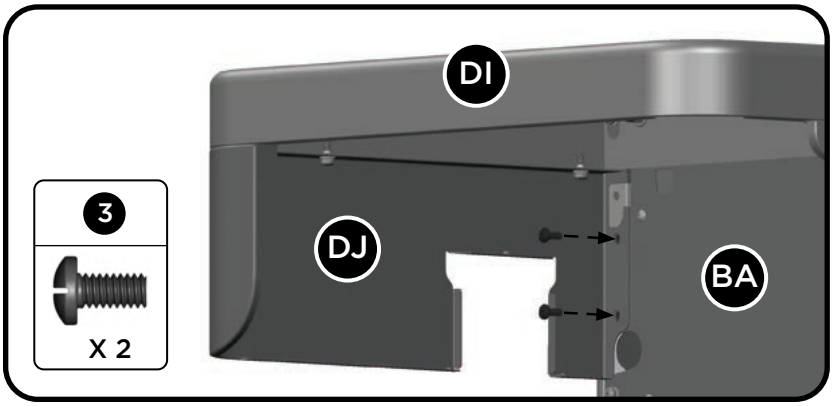

3
X 2

16

DJ

DL

DL

DJ

DL

DM

5

X 3

ATTENTION:
EMPTY GREASE CUP AFTER EACH USE.

17

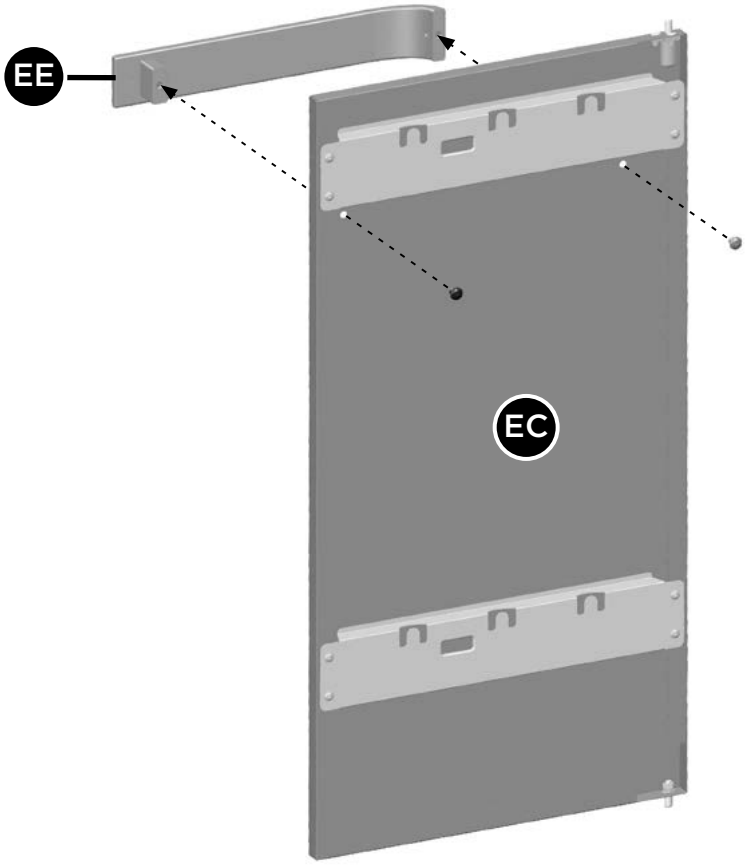

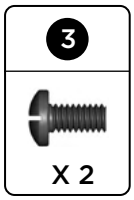

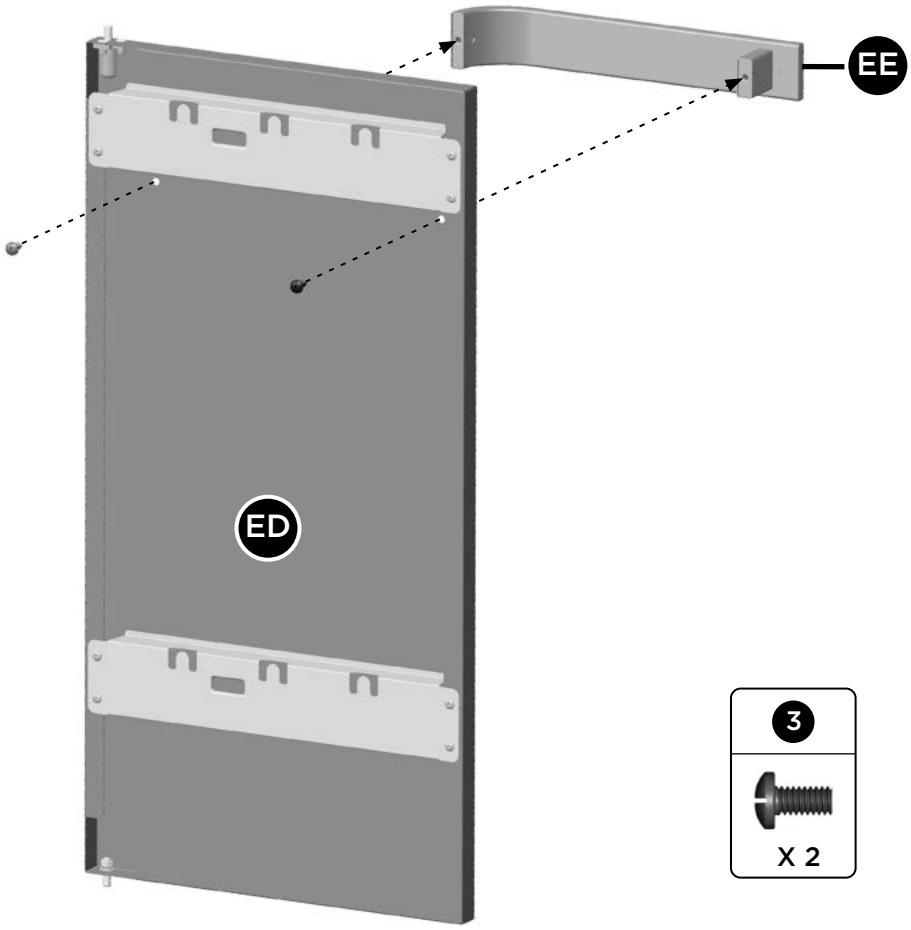

18

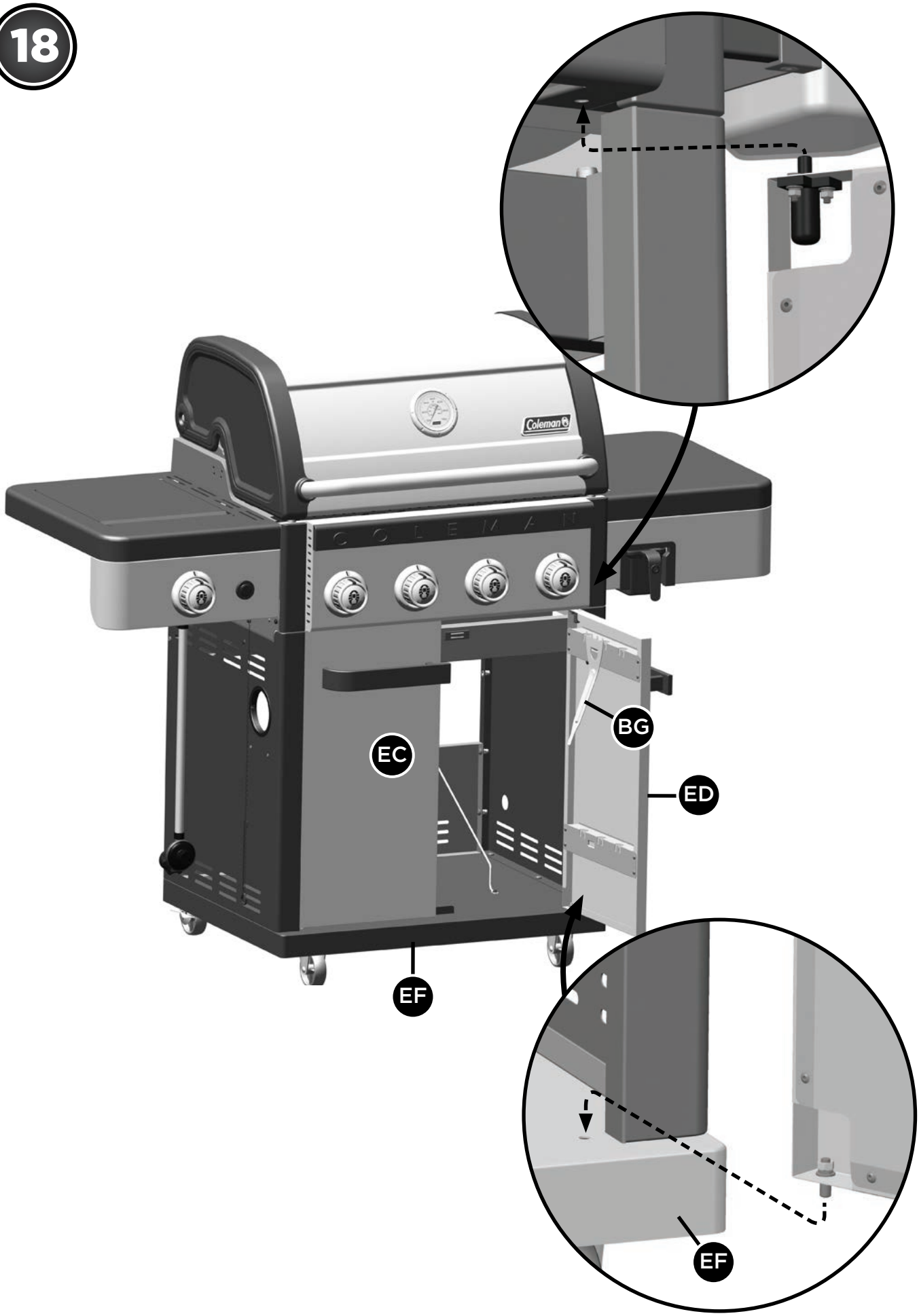

CONVERTIBLE VALVE SYSTEM™

ATTENTION: YOUR MODEL includes the CONVERTIBLE VALVE SYSTEM™. If you would like to convert your BBQ from PROPANE to NATURAL GAS, the following kit is required

Convertible Valve System™ Natural Gas Conversion Kit - product number: 85-2261-4 (available at Canadian Tire)

Before completing steps 19 to 24, follow the steps outlined in the CONVERTIBLE VALVE SYSTEM™ instruction manual that accompanied the kit.

19

20

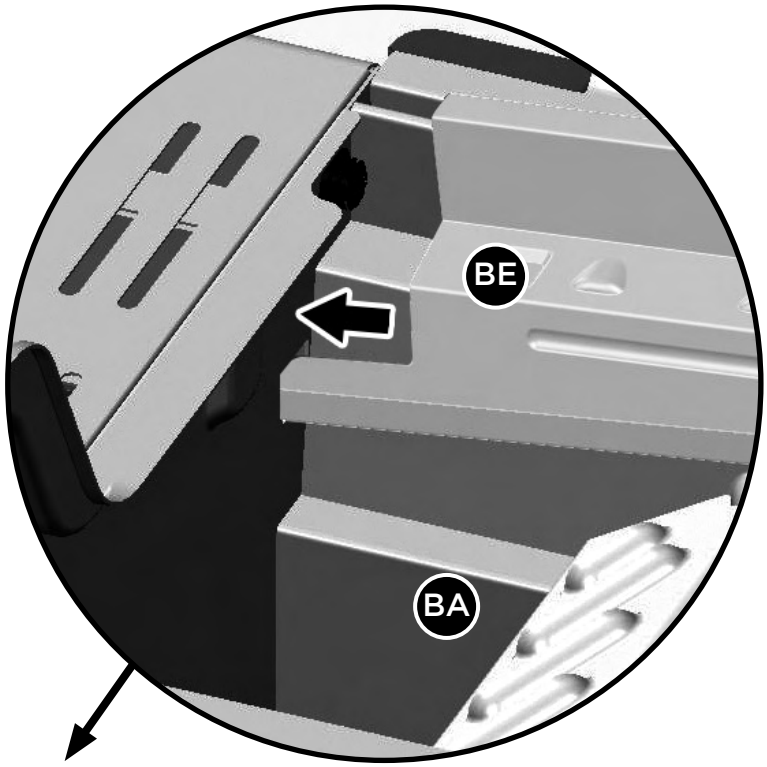

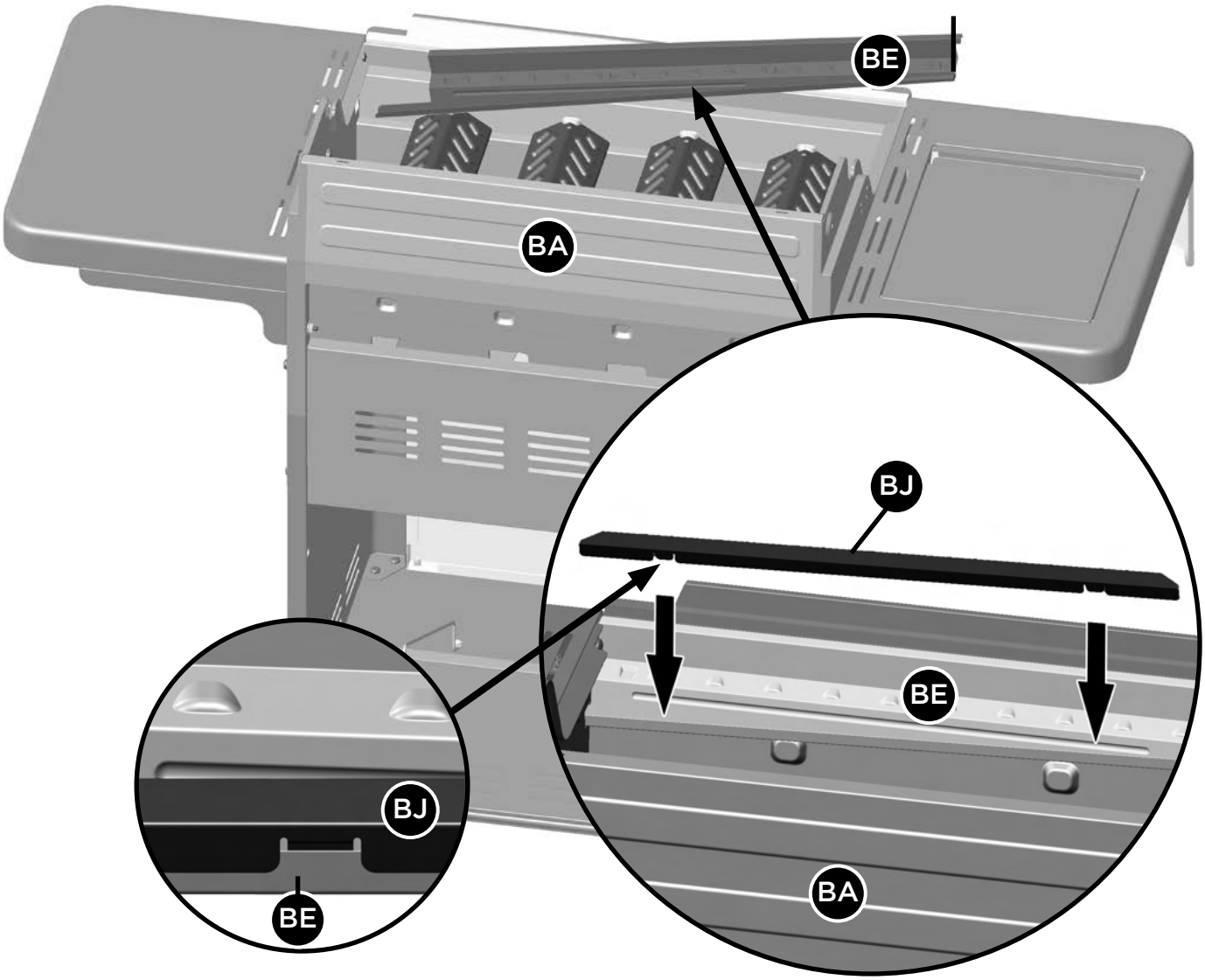

21

⚠ ATTENTION:
STACK GRATES BEFORE POSITIONING.

Upper Cooking Grate:
BF - Porcelain Cast Iron Cooking Grate
Lower Cooking Grate:
BK - Stamped Steel Cooking Grate

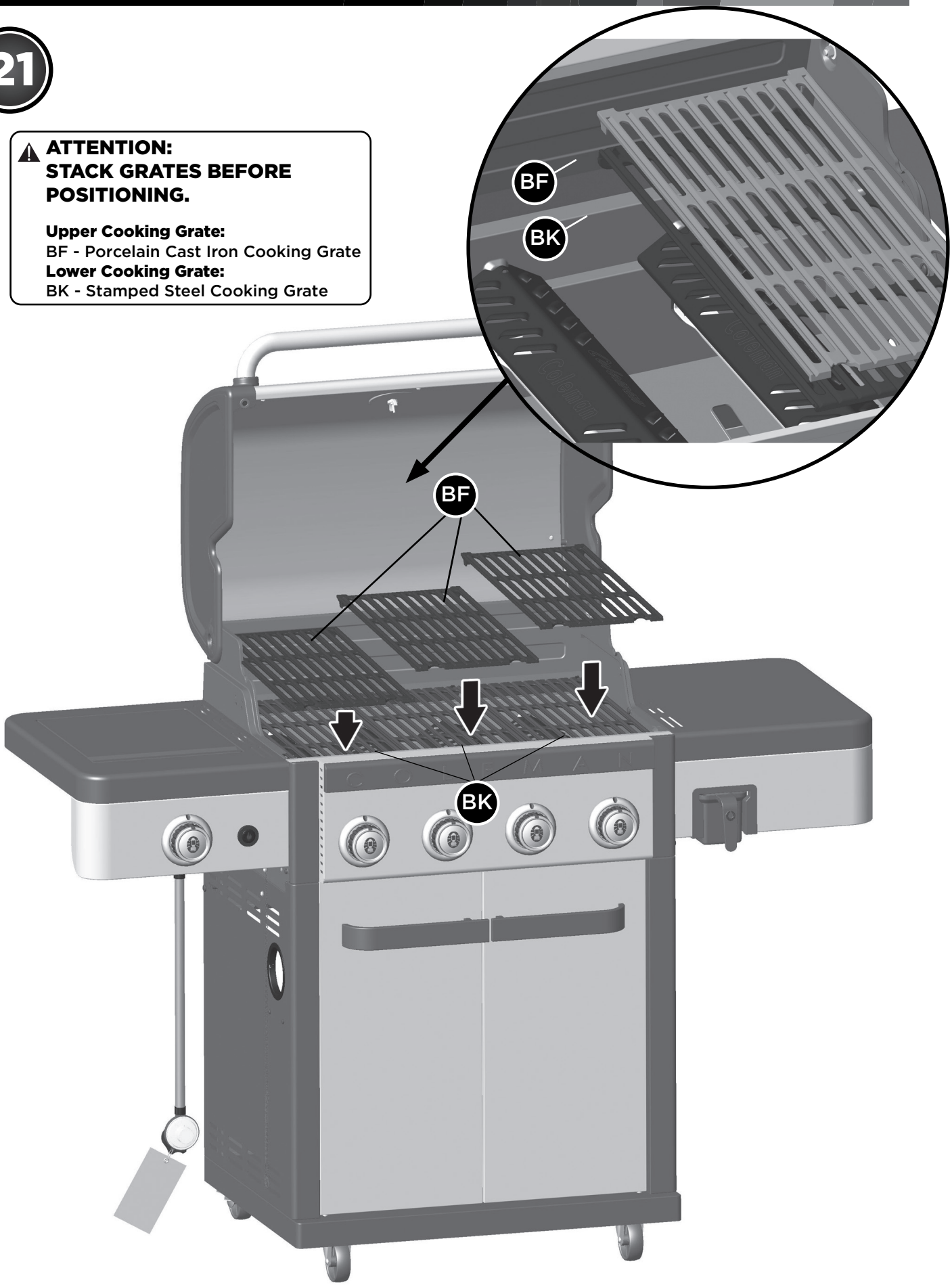

22

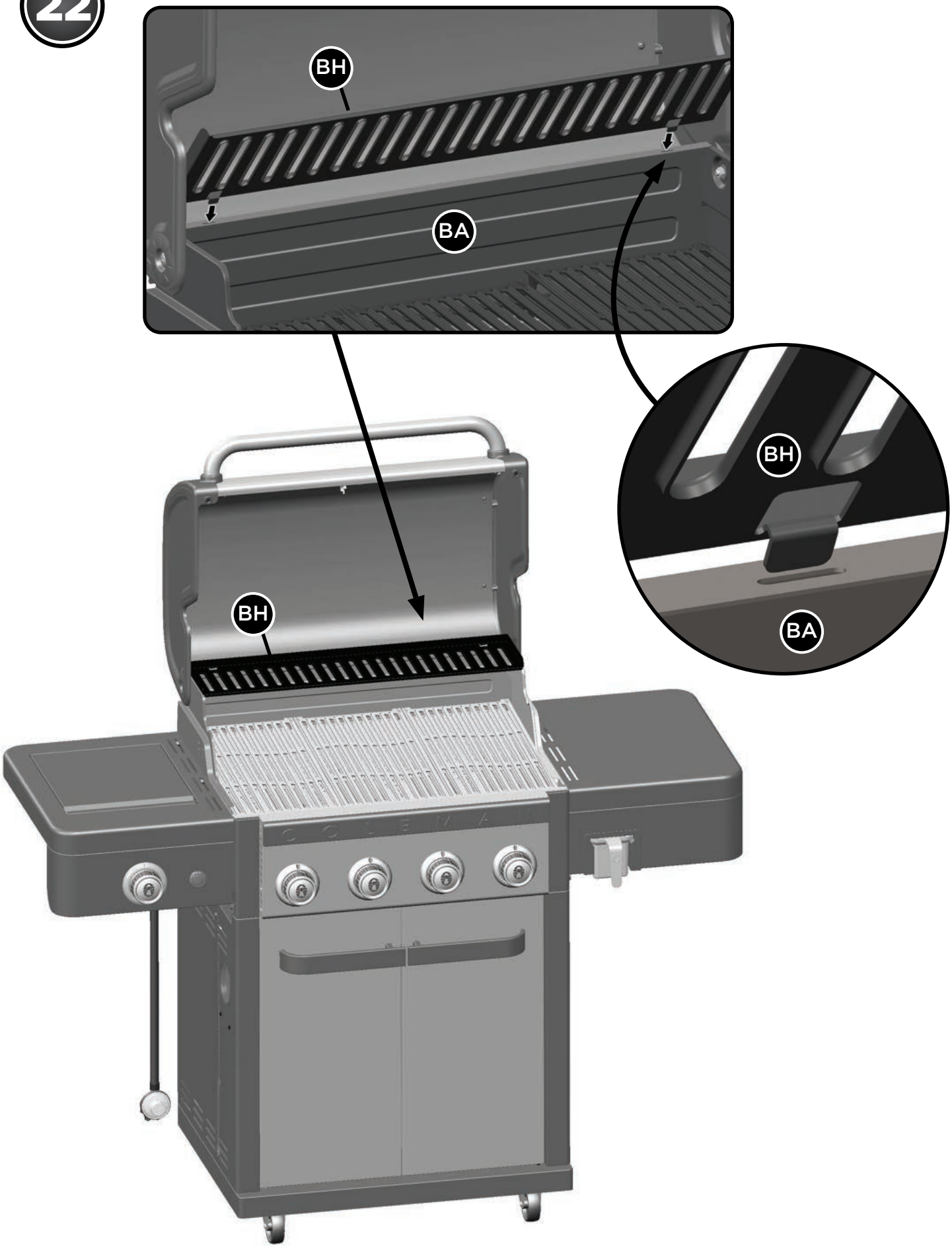

23 FOR PROPANE MODEL ONLY
FOR NATURAL GAS MODEL , FOLLOW STEP 24

⚠ ATTENTION:
DO NOT STORE EXTRA PROPANE TANK WITHIN BBQ CART.

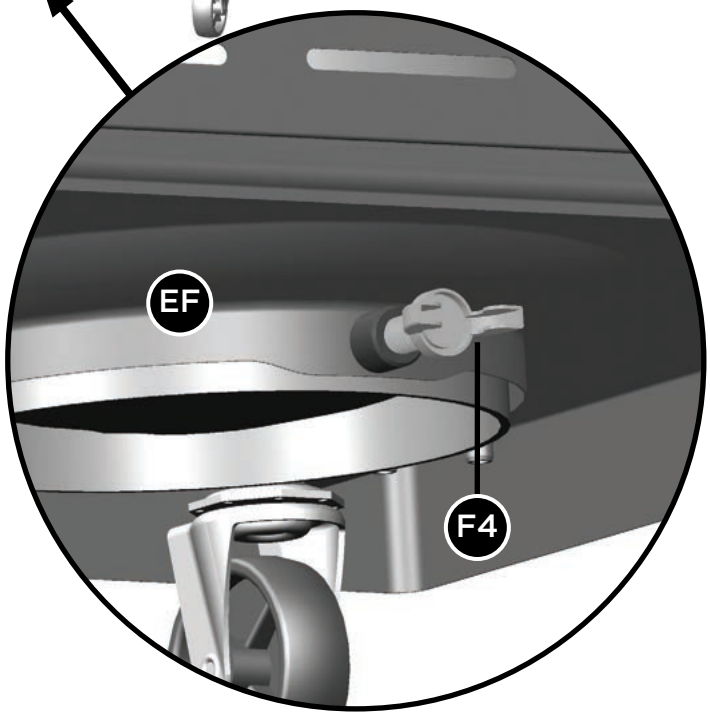

24

HOW TO CONVERT YOUR BBQ TO NATURAL GAS

This barbecue was sold PROPANE READY, if you wish to convert your barbecue to Natural Gas you must purchase the Natural Gas Conversion Kit sold at Canadian Tire, product #85-2261-4.

IMPORTANT

Make sure the conversion kit packaging has the following symbol on it:

CONVERTIBLE
VALVE SYSTEM™

ADDITIONAL WARNINGS

You have now completed the Assembly of your COLEMAN® REVOLUTION™ BARBECUE.

NEXT STEPS:

1. Position your BARBECUE
2. Read SAFE USE & CARE MANUAL
3. Perform Grill Safety Check-list

⚠ **WARNING:**
FOR YOUR FAMILIES SAFETY, DO NOT ATTEMPT TO LIGHT THIS BBQ UNTIL YOU HAVE REVIEWED PAGES 4-7 OF THE COLEMAN® SAFE USE & CARE MANUAL. ALL SAFETY AND LEAK TESTS MUST BE PERFORMED BY THE END USER, PRIOR TO LIGHTING THIS BBQ.

⚠ **WARNING HOT SURFACES**:

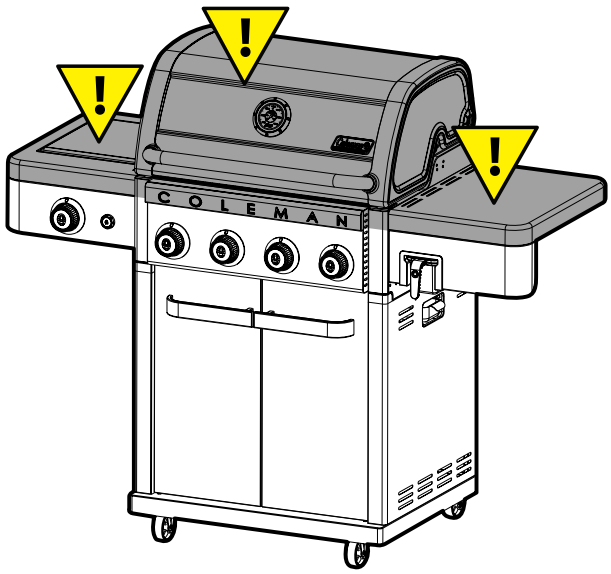

POSITION YOUR BARBECUE

Always confirm that this Barbecue is not positioned under a combustible object (e.g., an awning or umbrella) or in a covered area (e.g., porch or gazebo) before lighting it, to prevent a possible fire.

Always confirm that this Barbecue is not positioned under the overhang of a house, a garage or other structure before lighting it. An overhang will serve to deflect flare-ups and radiate heat into the structure itself, which could result in a fire.

Always confirm that this Barbecue is positioned more than 36” (91.4cm) away from any combustible materials or surfaces before lighting it, and that no gasoline or other volatile substances are stored in the vicinity of this Barbecue. The temperature of a grease fire or of the radiated heat might otherwise be sufficient to ignite nearby combustibles or volatile substances. Do not position near windows, siding, or fencing.

Always locate the Barbecue where there will be ample combustion and ventilation air, but never position it in the direct path of a strong wind.

Level your barbecue for optimal performance of Flare-Free Technology™.

Join the conversation

facebook.com/colemangrills

twitter.com/colemangrills

Manufactured by Winners Products Engineering Ltd.

©2021 The Coleman Company, Inc.
Coleman®, Coleman and are registered trademarks of
The Coleman Company, Inc. used under license.