## ATTENTION:

1.The HID bulb may need a few seconds to reach 100% brightness from cold start.

2.Please make sure installing the correct headlight bulb for your vehicle. If it does not fit your vehicle, it may cause the vehicle to ignite spontaneously, the assembly melts and wiring damaged. And we will not be responsible for the damage cause by inappropriate operation.

3.Please use the gloves when installing. Prevent the defective brightness of the bulb and light shape from your fingerprints.

4.The HID bulb may occur chromatic aberration after installation within 5 minutes. Please don't worry, it's a normal phenomenon and will be right after 5 minutes.

5.Please check the vehicle's main computer system whether there is a fault light or error message after the installation. If yes, please consult the professional to use a decoding rectifier.

6.Please install the Xenon bulb legally according to the relevant local laws and regulations.

7.It is not suitable to use high power and large current rectifier.

8. The following conditions are beyond warranty scope.

A. Man-made reason lead to broken HID bulb, user modify or repair the bulb themselves etc.

B.Natural disaster: damage because of irresistible natural disaster like earthquake, flood etc.

## PHENOMENON&SOLUTION

| PHENOMENON | SOLUTION |
|---|---|
| Lights do not turn on | Exchange the installation positions of the two bulbs to check if the same bulb can't light up. If yes, please take some photos or video of the bulb and contact us, we will give you a satisfactory solution. |
| Lights turn on, flicker or shut off quickly | 1.It may occur chromatic aberration after the installation within 5 minutes. Please don't worry, it is the normal phenomenon and will be right after 5 minutes.<br>2.Change both bulbs to the another sides. If the bulb still flicker, please contact us and provide the photos or video of the bulb. We will give you a satisfactory solution. |

## INSTALLATION INSTRUCTIONS:

Please read these instructions carefully before installation and the incorrect installation may cause the damage to your vehicle. If you are not sure how to install, please consult us or professional technician for help.

| | |
|---|---|
| STEP 1 | Before installing, please make sure the headlight, air-condition and other devices are turned off. And please open the Engine Cover Box. |
| STEP 2: | Use the right tool to remove the original headlight. |
| STEP 3: | Please use the gloves to install the HID bulb in the appropriate position to fix it. (Prevent the defective brightness of the bulb and light shape from your fingerprints. ) |
| STEP 4: | Connect the rectifier , connect the power cord and arrange the wiring. |
| STEP 5: | Test the bulb:<br>1)Start the vehicle and turn on the headlights and check the brightness.<br>2)Turn off the headlights and the light will off slowly. |

## PRODUCT SPECIFICATION

| | |
|---|---|
| OPERATING VOLTAGE : | D1S/D2S:85V D3S/D4S:45V |
| LIFESPAN: | 3000 hrs |
| COLOR TEMPERATURE: | 6000K |
| OPERATING TEMPERATURE: | -40℃~+105℃ |
| POWER: | 35W |

# NEED HELP?

If you're having any issue with the product or need technical support, Nilight team is always here to help and make sure your **100% satisfaction.**

**Please contact us by headlight @nilight.com**

LIGHT
www.nilight.com

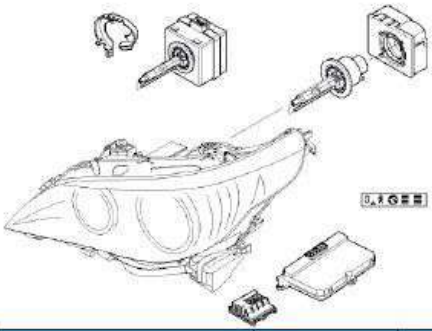

| Type | Headlight Assembly Required | Position | Voltage |
|---|---|---|---|
| D1S | High Intensity Discharge (HID) | High/Low Beam | 85V |
| D2S | High Intensity Discharge (HID) | Low Beam | 85V |
| D3S | High Intensity Discharge (HID) | High/Low Beam | 45V |
| D4S | High Intensity Discharge (HID) | Low Beam | 45V |

LIGHT

# PRODUCT INSTRUCTIONS
## HID LIGHTING

