Rowing machine user manual

Model Number: **RW211**

The model number is helpful when you place an order enquiry.

(Please keep these instructions in a safe place)

Customer service

EU Email:
Support@Wenoker.com

Monday-Friday

From 8:00 am to 6:30 pm

(excluding public holidays)

Activate guarantee

Please contact us at the e-mail address to register your product and activate the warranty.

⚠ WARNING

Before starting an exercise programme, consult your doctor.

This is especially important for people over 40 or those with existing health problems. Read all instructions before using fitness equipment.

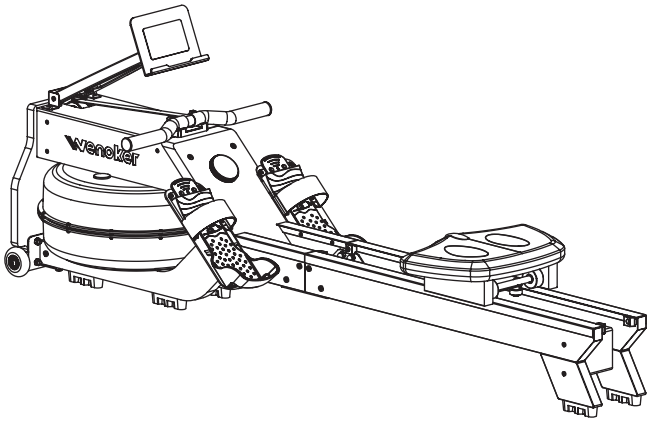

EN

Set your fitness goals

Table of Contents

Safety Instructions 1
Important Safety Notice 2
Specifications 3
Parts List 4
Assembly 6
Monitor Instruction 8
Product Movement 9
Exercise Instructions 10
Kinomap 11
Display Screen Overview 12
Kinomap Connection Operation 17
Detailed Explanation Of Product Parts 18
Detailed List Of Product Parts 19
Contact us 21

Safety Instructions

This symbol stands for "Conformité Européene", which means "conformity with EU directives". With the CE mark, the manufacturer confirms that this product conforms to the relevant European directives and regulations.

EU REP **Simplified EU Declaration of Conformity**

Name:Murano Luigi Commerce
Address:37 PASSAGE DU PONCEAU 75002 PARIS
Contact Person:Luigi MURANO
Tel:0782915536
E-mail: MuranoLuigi@outlook.com

Manufacturer: Xiamen Derby Healthechnogy Co.,Ltd.
Address: No.133, Tongji North Road, Tong'an District, Xiamen, China

UK REP

Name: KOVAASSOCIATES LTD
Address:72a Kingston Road,
PortsmouthHampshire PO2 7FA,
United Kingdom
E-mail:KOVA Compliance@outlook.com

NOTES ON DISPOSAL

Packaging materials are raw materials and can be reused. Separate the packaging into different types and dispose of it properly in the interests of the environment. You can also obtain more information from your local authority.

Used devices do not belong in household waste!
Dispose of used devices properly! Doing so helps fulfill our responsibility to protect the environment. your localadministration can provide **information on collection points and opening hours.**

Batteries do not belong in household waste!
As the end user, you are legally required to return discharged batteries to a collection point. you can take your old batteries to the public collection points in your community, or you can take them to any place where batteries of that type are being sold.

Important Safety Notice

1. Assemble the Rower exactly as described in this manual. Do not modify it.
2. Check all the screws, nuts and other connections before each use for any signs of damage of looseness. Do not use the trainer if it is impaired in any way.
3. Ensure that the trainer is in a safe and secure indoors location on a level floor away from moisture and water.
4. Place a suitable base (e.g. mat) beneath the trainer during assembly to limit dust and dirt entering the components. Only use the supplied tools or suitable tools of your own for assembly.
5. Before beginning training remove all objects within a radius of 2 meters.
6. Wipe all sweat from the trainer with a soft absorbent cloth after training. Avoid aggressive solvents or harsh brushes when cleaning.
7. Your health can be affected by incorrect or excessive training. Consult a doctor before beginning a health program. Your doctor can define settings (heart rate, duration etc.) to which you may train yourself. This trainer is not for therapeutic purposes. It is for private home use.
8. Use only original spare parts for any necessary repairs.
9. This trainer should be used by only one person at a time.
10. Never use when under the influence of drugs, alcohol or medication that causes disorientation.
11. Wear training clothes and shoes that are suitable for fitness training. Your training shoes should be enclosed and tight fitting.
12. Do not put hands, fingers, feet, toes or any objects on or near this equipment when in use.
13. If you have a feeling of chest pain, shortness of breath, dizziness, sickness or other abnormal symptoms, please stop training and consult a doctor immediately.
14. Disabled or handicapped persons should only use the trainer after gaining doctor's approval and in the presence of an adult who can give aid and advice.
15. This trainer is not designed for use by children. Keep pets away from trainer during use.
16. This trainer has been certified by EN957 Class HC. The maximum user's weight is 160kg/352.74Lbs.

Specifications

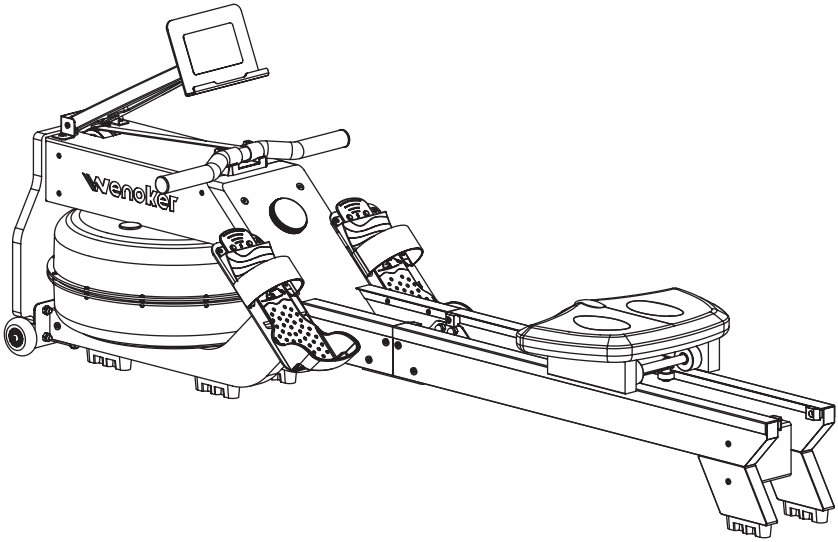

Model	RW211
Name	Wenoker Rowing machine
Adapter	9V 1A
Max. load	352.74 lbs(160 kg)
Product Dimensions	1799*670*446mm
Net weight	62.39LBS(28.3KG)

Parts List

No.	Name	Quantity		No.	Name	Quantity
A	Main frame assembly	1PC		B	Phone holder assembly	1PC
C	Rear left track assembly	1PC		D	Rear right track assembly	1PC
E	Seat assembly	1PC		F	PU roller assembly	2PCS
G	Instruction manual	1PC		H	Parts tray	1PC
53	Angled handlebar mount	1PC		95	Track connection plate	1PC
96	Water pump	1PC		119	Adapter	1PC

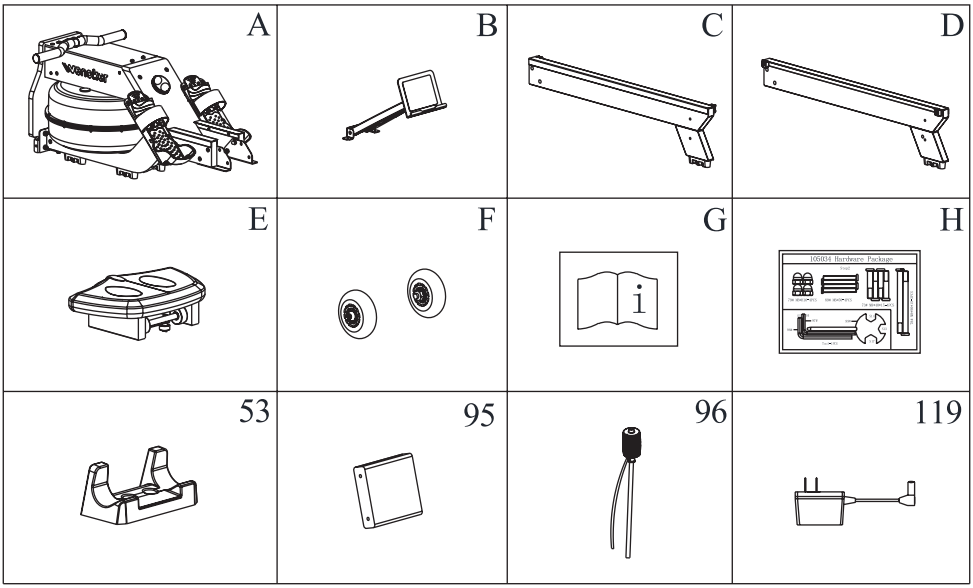

Accessory Tools:

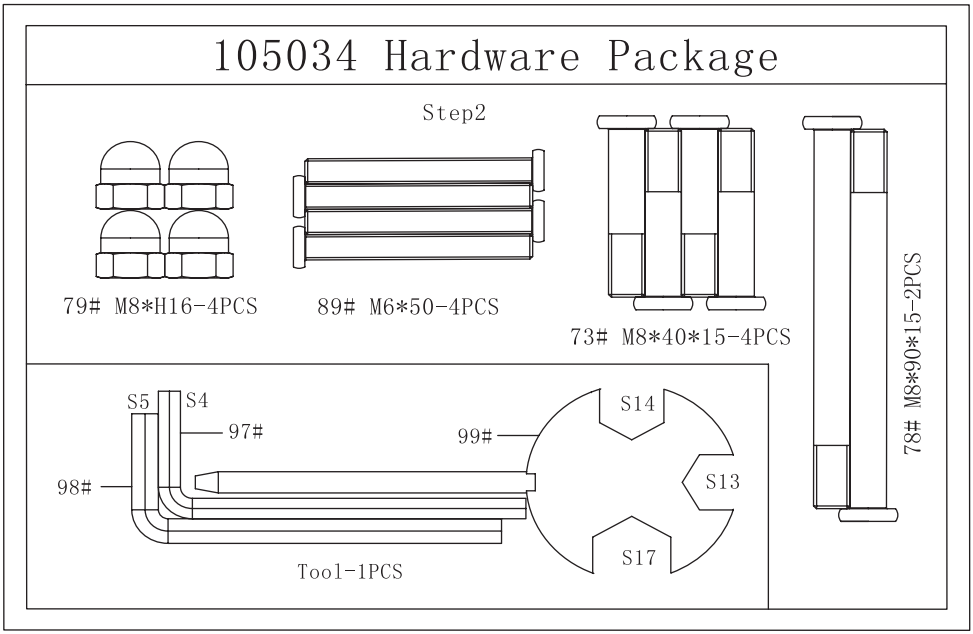

Assembly

STEP 1

Take out the various components from the carton and lay the main Main Frame (A):

1) Unscrew the Hexagon Grub Screws (50) pre-installed on the Main Frame (A) with the Allen Key S4. And then assemble the Phone Holder Assembly (B) to the corresponding position on the Main Frame (A). Finally, tighten the Hexagon Grub Screws (50).

2) Unscrew the Hexagon Head Screws (52) pre-installed on the Main Frame (A) with the Allen Key S4. And then assemble the Handlebar Holder (53) to the corresponding position on the Main Frame(A). Finally, tighten the Hexagon Head screws (52).

3) Screw the PU Roller Assembly (F) with the Allen Key S5 on the Main Frame (A).

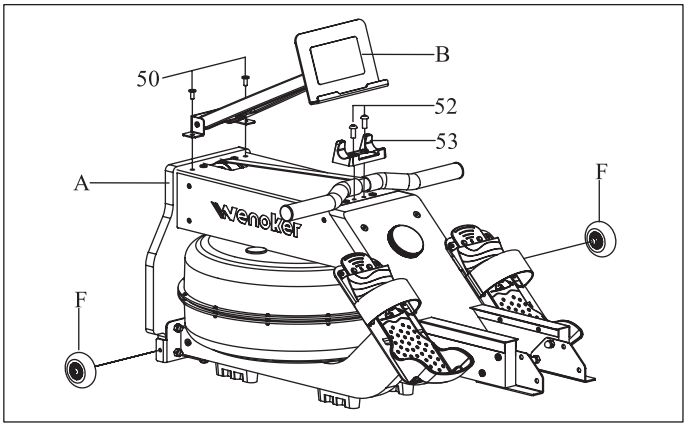

STEP 2

1) Install the Left Rear Rail Assembly (C) and the Right Rear Rail Assembly (D) to the corresponding positions on the Main Frame (A). And then pre-lock them to the Main Frame (A) with the Hexagon Grub Screws (73), the Hexagon Nuts (79), and the Hexagon Grub Screws (78).

2) Pre-lock the Rail Connecting Board (95) to the Main Frame (A) with the Hexagon Grub Screws (89).

3) Finally, tighten all of parts.

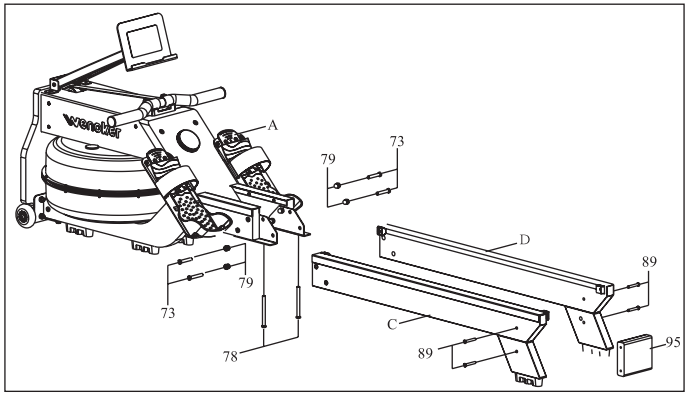

STEP 3

Unscrew the Hexagon Cheese Head Screws (84) and Seat Stopper (85) from the rear rail with the Allen Key S5. Slide the Seat Assembly (E) along the center of the rear rail. And reinstall the Seat Stopper and tighten the Hexagon Cheese Head Screws (84).

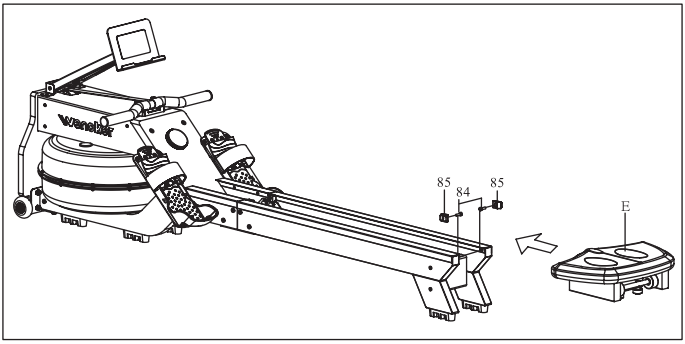

STEP 4

1) Unplug the Water Tank plug (30) from the water tank.
2) Fill the water tank as shown in Figure 1: Insert the Water Pump (96) into the water tank. Then fill the water tank with the Water Pump (96) and a bucket. Measure the amount of water by referring to the digital markings on the side of the tank.
3) Pump water as shown in Figure 2: Place a bucket next to the rowing machine and pump water from the water tank into the bucket with the Water Pump (96) .Plug the Water Tank Plug (30) into the water tank. Wipe off any water droplets on and around the machine with a dry cloth.

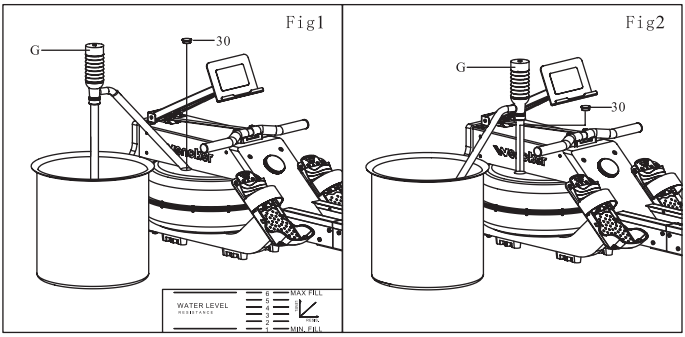

Monitor Instruction

1. Dispaly of Data

TIME:
Duration of exercise. Can be set for forward timing cr countdown.

SPEED:
Current rowing speed.

DISTANCE:
Exercise distance. Can be set for forward accumulation or countdown.

CALORIE:
Calories burned during exercise. Can be set for forward accumulation or countdown.

WATT:
Current power output.

STROKES:
Number of rowing strokes.

TIME/5OOM:
The ime required to row 500M at the current speed.

RPM:
Number of strokes per minute.

2. Operating Logic

Short touch: Enter the target value setting state before starting exercise. Long touch:Reset all data to zero. Rotation: Increase or decrease the target value before starting.Or manually select the data to be displayed during exercise.

3. Scan mode

After powering on, the electronic display will enter Scan Mode. in Scan Mode, thescreen automatically cycles through the data being displayed. Rotating the knob canexit Scan Mode and manually select the value to be displayed.

Product Movement

Sliding the Seat Assembly (E) to the front of rail(to prevent the Seat Assembly from falling down quickly and damaging) before moving. Then lift the left and right track rear feet with your hands until the PU roller touching the ground. Finally, you can move the machine as you like to where you want to place it.

