BC119B

Portable CD Player with AM/FM Radio

TABLE OF CONTENTS

Warnings and Precautions 2
Important Safety Instructions 3
Features 4
Powering the Unit 4
In the Box 4
Tuning the AM or FM Radio 5
Playing a CD 5
Programming a CD 5
Using the Auxiliary Input 5
Locations of Controls 6
Control Definitions 7
Parts Information 8
Service Information 8

Warnings and Precautions

This symbol, located on back or bottom of the unit, is intended to alert the user to the presence of uninsulated "dangerous voltage" within the product's enclosure that may be of sufficient magnitude to constitute a risk of electric shock to persons.

This symbol, located on back or bottom of the unit, is intended to alert the user to the presence of important operating and maintenance (servicing) instructions in the literature accompanying the appliance.

This product utilizes a Class 1 laser to read Compact Discs. **This laser Compact Disc Player is equipped with safety switches to avoid exposure when the CD door is open and the safety interlocks are defeated. Invisible laser radiation is present when the CD Player's lid is open and the system's interlock has failed or been defeated. It is very important that you avoid direct exposure to the laser beam at all times. Please do not attempt to defeat or bypass the safety switches.**

CAUTION: TO PREVENT ELECTRIC SHOCK, MATCH WIDE BLADE OF PLUG TO WIDE SLOT, FULLY INSERT.

To reduce the risk of electric shock, do not remove cover (or back). There are no user-serviceable parts inside. Please refer any servicing to qualified service personnel.

WARNING: Changes or modifications to this unit not expressly approved by the party responsible for compliance could void the user's authority to operate the equipment.

WARNING: To prevent fire or shock hazards, do not expose this unit to rain or moisture.

CAUTION: Danger of explosion if battery is incorrectly replaced. Replace only with the same or equivalent type.

PRÉCAUTION: *Danger d'explosion si les piles sont remplacées de façon incorrect. Remplacer les piles seulement par le même type de pile ou l'équivalent.*

Do not mix old and new batteries.
Do not mix alkaline, standard (carbon-zinc), or rechargeable (ni-cad, ni-mh, etc) batteries.

NOTE: This equipment has been tested and found to comply with the limits for a Class B digital device, pursuant to Part 15 of the FCC Rules. **These limits are designed to provide reasonable protection against harmful interference in a residential installation. This equipment generates, uses, and can radiate radio frequency energy and, if not installed and used in accordance with the instructions, may cause harmful interference to radio communications. However, there is no guarantee that interference will not occur in a particular installation. If this equipment does cause harmful interference to radio or television reception, which can be determined by turning the equipment off and on, the user is encouraged to try to correct the interference by one or more of the following measures:**

- **Reorient or relocate the receiving antenna.**
- **Increase the separation between the equipment and receiver.**
- **Connect the equipment into an outlet on a circuit different from that to which the receiver is connected.**
- **Consult the dealer or an experienced radio/TV technician for help.**

Important Safety Instructions

1. **Read Instructions -** All the safety and operating instruction should be read before the product is operated.

2. **Retain Instructions -** The safety and operating instruction should be retained for future reference.

3. **Heed Warnings -** All warning on the product and in the operating instructions should be adhered to.

4. **Follow instructions -** All operating and use instructions should be followed.

5. **Cleaning -** Unplug this product from the wall outlet before cleaning. Do not use liquid cleaners or aerosol cleaners. Clean only with a dry cloth.

6. **Attachments -** Do not use attachments not recommended by the product manufacturer as they may cause hazards.

7. **Water and Moisture -** Do not use this product near water - for example, near a bath tub, wash bowl, kitchen sink, or laundry tub; in a wet basement, or near a swimming pool, and the like. The apparatus shall not be exposed to dripping or splashing and that no objects filled with liquids, such as vases, shall be placed on apparatus.

   L' appareil ne doit pas être exposé aux écoulements ou aux éclaboussures et aucun objet ne contenant de liquide, tel qu'un vase, ne doit être placé sur l'objet.

8. **Accessories -** Do not place this product on an unstable cart, stand tripod, bracket, or table. The product may fall, causing serious injury to a child or adult, and serious damage to the product. Use only with a cart, stand, tripod, bracket, or table recommended by the manufacturer, or sold with the product. Any mounting of the product should follow the manufacturer's instructions, and should use a mounting accessory recommended by the manufacturer.

9. Use only with the cart, stand, tripod, bracket, or table specified by the manufacturer, or sold with the apparatus. When a cart is used, use caution when moving the cart/apparatus combination to avoid injury from tip-over.

See figure:

10. **Ventilation -** Slots and openings in the cabinet are provided for ventilation and to ensure reliable operation of the product and to protect it from

overheating, and these openings must not be blocked or covered. The openings should never be blocked by placing the product on a bed, sofa, rug, or other similar surface. This product should not be placed in a built-in installation such as a bookcase or rack unless proper ventilation is provided or the manufacturer's instruction have been adhered to.

11. **Power Sources -** This product should be operated only from the type of power source indicated on the marking label. If you are not sure of the type of power supply to your home, consult your product dealer or local power company. For products intended to operate from battery power, or other sources, refer to the operating instruction.

12. **Grounding or Polarization -** This product may be equipped with a polarized alternating-current line plug (a plug having one blade wider than the other). This plug will fit into the power outlet only one way. This is a safety feature. If you are unable to insert the plug fully into the outlet, try reversing the plug. If the plug should still fail to fit, contact your electrician to replace your obsolete outlet. Do not defeat the safety purpose of the polarizes plug.

    Alternate Warnings - This product is equipped with a three-wire grounding-type plug, a plug having a third (grounding) pin. This plug will only fit into a grounding-type power outlet. This is a safety feature. If you are unable to insert the plug into the outlet, contact your electrician to replace your obsolete outlet. Do not defeat the safety purpose of the grounding-type plug.

13. **Power-Cord Protection -** Power supply cords should be routed so that they are not likely to be walked on or pinched by items placed upon or against them, paying particular attention to cords at plugs, convenience receptacles, and point where they exit from the product.

14. **Protective Attachment Plug -** The product is equipped with an attachment plug having overload protection. This is a safety feature. See Instruction Manual for replacement or resetting of protective device. If replacement of the plug is required, be sure the service technician has used a replacement plug specified by the manufacturer that has the same overload protection as the original plug.

15. **Outdoor Antenna Grounding -** If an outside antenna is connected to the receiver, be sure the antenna system is grounded so as to provide some protection against voltage surges and built-up static charges. Article 810 of the National Electrical Code, ANSI/NFPA 70, provides information with regard to proper grounding of the mast and supporting structure, grounding of the mast and supporting structure, grounding of the lead-in wire to an antenna-discharge unit, size of grounding conductors, location of antenna-discharge unit, connection to grounding electrodes, and requirements for the grounding electrode.

See figure:

16. **Lightning -** For added protection for this product during a lightning storm, or when it is left unattended and unused for long periods of time, unplug it from the wall outlet and disconnect the antenna or cable system. This will prevent damage to the product due to lightning and power-line surges.

17. **Power Lines -** An outside antenna system should not be located in the vicinity of overhead power lines or other electric light or power circuits, or

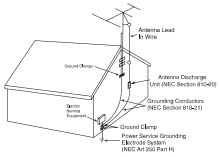

where it can fall into such power lines or circuits. When installing an outside antenna system, extreme care should be taken to keep from touching such power lines or circuits as contact with them might be fatal.

18. **Overloading -** Do not overload wall outlets, extension cords, or integral convenience receptacles as this can result in a risk of fire or electric shock.

19. **Object and Liquid Entry -** Never push objects of any kind into this product through openings as they may touch dangerous voltage points or short-out parts that could result in a fire or electric shock. Never spill liquid of any kind on the product.

20. **Servicing -** Do not attempt to service this product yourself as opening or removing covers may expose you to dangerous voltage or other hazards. Refer all servicing to qualified service personnel.

21. **Damage Requiring Service -** Unplug this product from the wall outlet and refer servicing to qualified service personnel under the following conditions:

    a) When the power-supply cord or plug is damaged,

    b) If liquid has been spilled, or objects have fallen into the product,

    c) If the product has been exposed to rain, water or moisture.

    d) If the product does not operate normally by following the operating instructions. Adjust only those controls that are covered by the operating instructions as an improper adjustment of other controls may result in damage and will often require extensive work by a qualified technician to restore the product to its normal operation.

    e) If the product has been dropped or damaged in any way, and

    f) When the product exhibits a distinct change in performance - this indicates a need for service.

22. **Replacement Parts -** When replacement parts are required, be sure the service technician has used replacement parts specified by the manufacturer or have the same characteristics as the original part. Unauthorized substitutions may result in fire, electric shock, or other hazards.

23. **Safety Check -** Upon completion of any service or repairs to this product, ask the service technician to perform safety checks to determine that the product is in proper operating condition.

24. **Wall or Ceiling Mounting -** The product should be mounted to a wall or ceiling only as recommended by the manufacturer.

25. **Heat -** The product should be situated away from heat sources such as radiators, heat registers, stoves, or other products (including amplifiers) that produce heat. Battery shall not be exposed to excessive heat such as sunshine, fire, or the like.

    Les piles ne doivent pas être exposées à de forte chaleur, tel qu'à la lumière du soleil, au feu ou autres choses de semblable.

26. Main plug is used as disconnect device and it should remain readily operable during intended use. In order to disconnect the apparatus from the mains completely, the mains plug should be disconnected from the mains socket outlet completely.

    La prise du secteur ne doit pas être obstruée ou doit être facilement accessible pendant son utilisation. Pour être complètement déconnecté de l'alimentation d'entrée, la prise doit être débranchée du secteur.

27. Excessive sound pressure from earphones and headphones can cause hearing loss.

    Des pressions acoustiques excessives provenant d'écouteurs ou de casques peuvent provoquer des pertes de l'audition.

28. To prevent fire or shock hazard, do not use this plug with an extension cord, receptacle or other outlet unless the blades can be fully inserted to prevent blade exposure.

29. Symbol is used to indicate that a specific component shall be replaced only by the component specified in that documentation for safety reasons.

30. This symbol indicates that this product incorporates double insulation.

31. Caution marking is located at the bottom of apparatus.

    Les précautions d'emploi sont inscrites en bas de l'appareil.

32. The marking information is located at the bottom of apparatus.

    Les marquages sont inscrits en bas de l'appareil.

Features

- CD player: CD, CD-R/RW
- AM/FM radio
- Auxiliary input
- Programmable CD tracks
- 2-digit red LED
- Built-in speakers
- AC power: detachable AC cord
- DC power: requires 7 C batteries, not included

In the Box

- BC119B
- Detachable AC Cord
- Documentation

Powering the Unit

AC Power

Plug the detachable AC cord into a standard AC outlet (120V~60Hz)

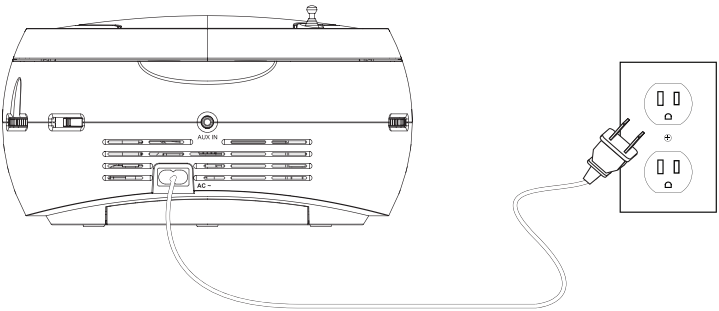

Battery Power

Requires 7 C batteries, not included.

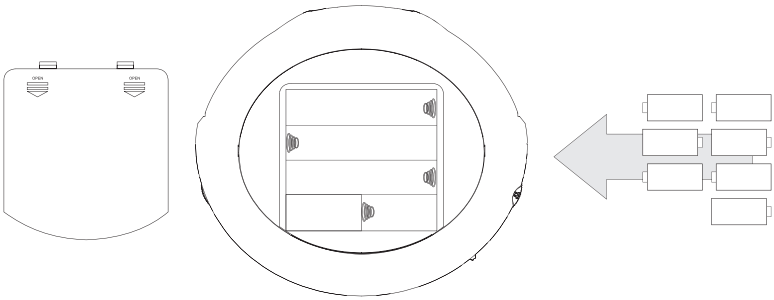

Tuning the AM or FM Radio

Step 1: Adjust the **Power Switch** to *AM* or *FM mode*.

- *Extend the FM antenna to improve FM radio reception. An AM antenna is built into the unit. Adjust the unit to improve AM reception.*

Step 2: Turn the **Tuning Dial** to the desired AM or FM station.

Playing a CD

Step 1: Open the CD door, and place a CD or CD-R/RW into the player.

Step 2: Adjust the **Power Switch** to *CD mode.*

Step 3: Press the **Play/Pause Button** to begin playing the loaded CD.

Programming a CD

Step 1: Open the CD door, and place a CD or CD-R/RW into the player.

Step 2: Adjust the **Power Switch** to *CD mode.*

Step 3: Press the **Program Button**.

Step 4: Press the **Skip/Search Buttons** to select the CD track to play.

Step 5: Press the **Program Button.**

Step 6: Repeat *Steps 4-5* to program up to 20 total CD tracks.

Using the Auxiliary Input

Audio Source	Required Connector
MP3 Player	mini-phono 3.5mm Cable (not included)

Step 1: Connect a *mini-phono 3.5mm Cable* (not included) to the **Auxiliary Input** on the unit and the audio output on an MP3 player.

Step 2: Adjust the **Power Switch** to *CD mode*.

- *Audio played through the connected MP3 player will now be heard through the unit.*

Locations of Controls

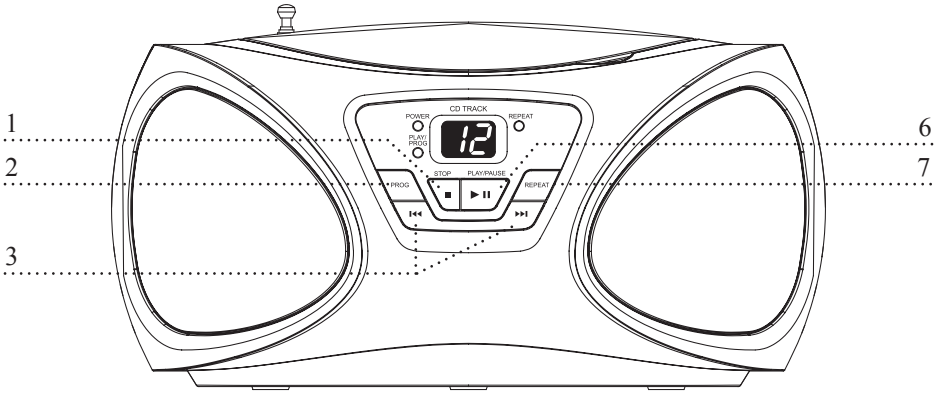

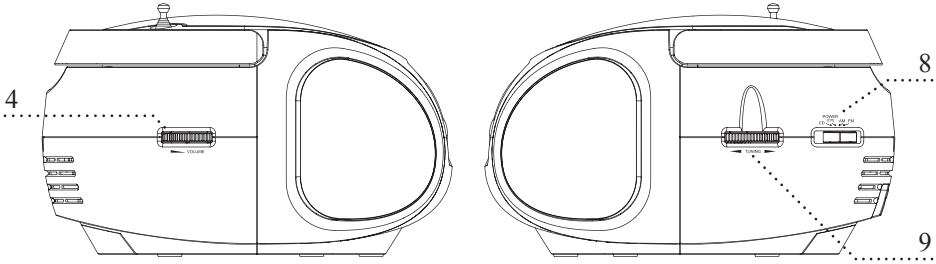

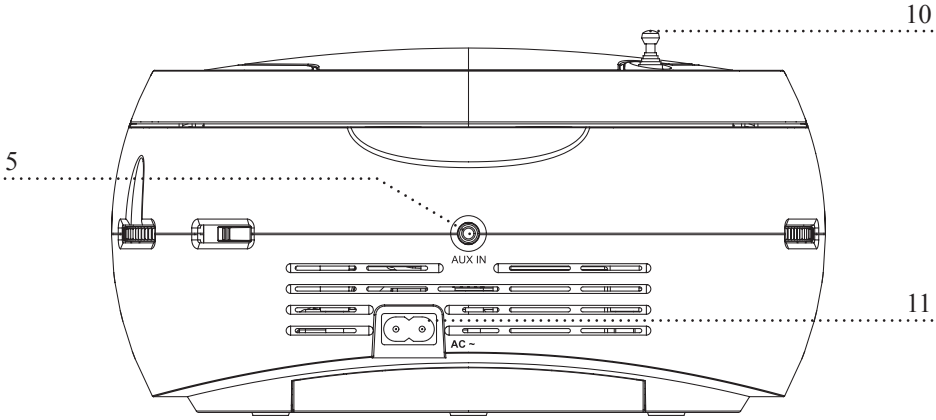

Control Definitions

1. Stop Button

Press the Stop Button to stop a CD during play.

2. Program Button

Press the Program Button, in *CD mode*, to program up to 20 CD tracks.

3. Skip/Search Buttons

Press the Skip/Search Buttons to skip between CD tracks.

Press and hold the Skip/Search Buttons to search through a single CD track.

4. Volume Dial

Turn the Volume Dial to adjust the volume of the unit.

5. Auxiliary Input

Use the Auxiliary Input to connect an external audio source (MP3 player) to the unit.

6. Play/Pause Button

Press the Play/Pause Button to play or pause a loaded CD.

7. Repeat Button

Press the Repeat Button once to repeat the currect CD track.

Press the Repeat Button twice to repeat the entire album.

8. Power Switch *(CD, Off, AM, FM)*

Adjust the Power Switch to select *CD, Off, AM,* or *FM mode.*

9. Tuning Dial

Turn the Tuning Dial to adjust the AM or FM radio station.

10. FM Antenna

Extend and adjust the FM Antenna to improve FM radio reception.

An AM antenna is built into the unit. Adjust the unit to improve AM reception.

11. AC Power Input

Use the AC Power Input to connect the unit to an AC power source.

Parts Information

Address: 2116 Carr Street, St. Louis MO, 63106
Phone: 1-314-621-2881
Fax: 1-314-588-1805
Email: partsinfo@dpi-global.com

Service Information

Address: 2116 Carr Street, St. Louis MO, 63106
Phone: 1-314-621-2881
Fax: 1-314-588-1805
Email: prodinfo@gpx.com
Website: www.gpx.com
Version: v. 010809

To download this Instruction Manual in English, Spanish, or French visit the Support section at www.gpx.com.

Para descargar este manual de instrucción en inglés, español, o francés visite la sección de la ayuda en www.gpx.com.

Pour télécharger ce manuel d'instruction en anglais, espagnol, ou le Français visitez la section de soutien à www.gpx.com.

©2009 Digital Products International (DPI, Inc.)
All other trademarks appearing herein are the property of their respective owners.