Digital Projector

User Manual

Home Cinema Series

V 1.00

Warranty and Copyright information

Limited warranty

BenQ warrants this product against any defects in material and workmanship, under normal usage and storage.

Proof of purchase date will be required with any warranty claim. In the event this product is found to be defective within the warranty period, BenQ's only obligation and your exclusive remedy shall be replacement of any defective parts (labor included). To obtain warranty service, immediately notify the dealer from which you purchased the product of any defects.

Important: The above warranty shall be void if the customer fails to operate the product in accordance with BenQ's written instructions, especially the ambient humidity must be in-between 10% and 90%, temperature in-between 0°C and 35°C, altitude lower than 4920 feet, and avoiding to operate the projector in a dusty environment. This warranty gives you specific legal rights, and you may have other rights which vary from country to country.

For other information, please visit www.BenQ.com.

Copyright

Copyright © 2025 by BenQ Corporation. All rights reserved. No part of this publication may be reproduced, transmitted, transcribed, stored in a retrieval system or translated into any language or computer language, in any form or by any means, electronic, mechanical, magnetic, optical, chemical, manual or otherwise, without the prior written permission of BenQ Corporation.

Disclaimer

BenQ Corporation makes no representations or warranties, either expressed or implied, with respect to the contents hereof and specifically disclaims any warranties, merchantability or fitness for any particular purpose. Further, BenQ Corporation reserves the right to revise this publication and to make changes from time to time in the contents hereof without obligation to notify any person of such revision or changes.

*DLP, Digital Micromirror Device and DMD are trademarks of Texas Instruments. Others are copyrights of their respective companies or organizations.

The terms HDMI, HDMI High-Definition Multimedia Interface, HDMI Trade dress and the HDMI Logos are trademarks or registered trademarks of HDMI Licensing Administrator, Inc.

BenQ ecoFACTS

BenQ has been dedicated to the design and development of greener product as part of its aspiration to realize the ideal of the "Bringing Enjoyment 'N Quality to Life" corporate vision with the ultimate goal to achieve a low-carbon society. Besides meeting international regulatory requirement and standards pertaining to environmental management, BenQ has spared no efforts in pushing our initiatives further to incorporate life cycle design in the aspects of material selection, manufacturing, packaging, transportation, using and disposal of the products. BenQ ecoFACTS label lists key eco-friendly design highlights of each product, hoping to ensure that consumers make informed green choices at purchase. Check out BenQ's CSR Website at http://csr.BenQ.com/ for more details on BenQ's environmental commitments and achievements.

Product carbon footprint (PCF)

The carbon footprint of a product is the estimated carbon emission throughout its entire life cycle. The information may be available on the package or online.

The carbon footprint stated for this product is the current estimate and the actual result may be subject to change due to unforeseen conditions. This means the actual product carbon footprint may be different from the declared statement.

You may not find your product's carbon footprint as it was not available at the time the product was shipped. The information should be online once it's available.

Table of Contents

Warranty and Copyright information **2**

Important safety instructions **5**

Introduction **8**
- Shipping contents 8
- Projector exterior view 11
- Terminals 12
- Controls and functions 13

Positioning your projector **15**
- Choosing a location 15
- Obtaining a preferred projected image size 16
- Mounting the projector 17
- Adjusting the projector position 19
- Adjusting the projected image 20

Connection **22**

Operation **23**
- Starting up the projector 23
- Setting up the Android TV dongle (regional specific) 26
- Using the menus 28
- Securing the projector 29
- Switching input signal 29
- Presenting from a Media Reader 30
- Shutting down the projector 31

Menu operation **32**
- Basic menu 32
- Advanced menu 33

Maintenance **50**
- Care of the projector 50
- Light source information 51

Troubleshooting **54**

Specifications **55**
- Projector specifications 55
- Dimensions 56
- Timing chart 57
- RS232 command 60

Important safety instructions

Your projector is designed and tested to meet the latest standards for safety of information technology equipment. However, to ensure safe use of this product, it is important that you follow the instructions mentioned in this manual and marked on the product.

1. **Please read this manual before you operate your projector.** Save it for future reference.

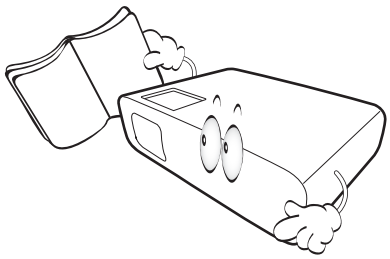

2. **Do not look straight at the projector lens during operation.** The intense light beam may damage your eyes.

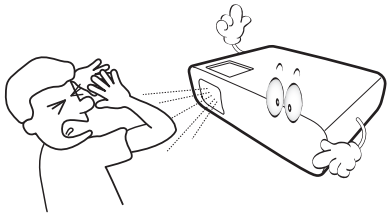

3. **Refer servicing to qualified service personnel.**

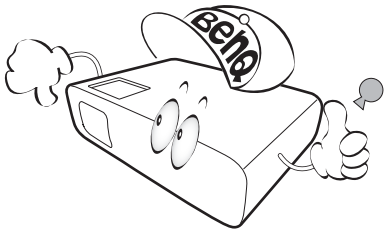

4. Always open the lens shutter (if any) or remove the lens cap (if any) when the projector light source is on.

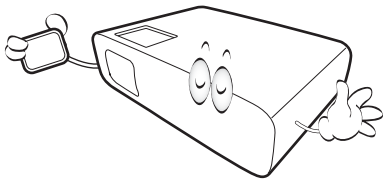

5. The light source becomes extremely hot during operation.

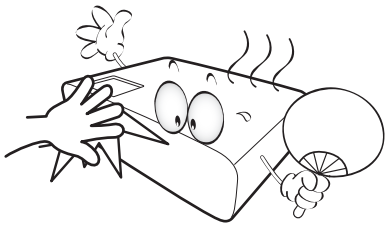

6. In some countries, the line voltage is NOT stable. This projector is designed to operate safely within a mains voltage between 100 to 240 volts AC, but could fail if power cuts or surges of ±10 volts occur. **In areas where the mains voltage may fluctuate or cut out, it is recommended that you connect your projector through a power stabilizer, surge protector or uninterruptible power supply (UPS).**

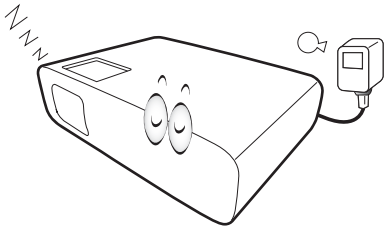

7. Do not block the projection lens with any objects when the projector is under operation as this could cause the objects to become heated and deformed or even cause a fire. To temporarily turn off the light source, press the **ECO BLANK** button.

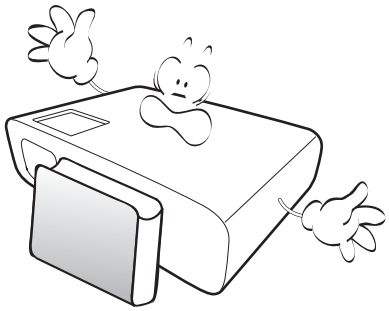

8. Do not operate light sources beyond the rated light source life.

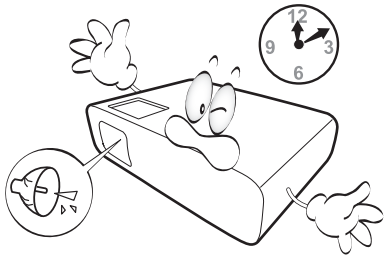

9. Do not place this product on an unstable cart, stand, or table. The product may fall, sustaining serious damage.

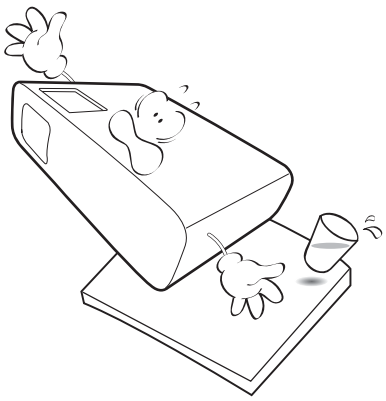

10. Do not attempt to disassemble this projector. There are dangerous high voltages inside which may cause death if you should come into contact with live parts.

    Under no circumstances should you ever undo or remove any other covers. Refer servicing only to suitably qualified professional service personnel.

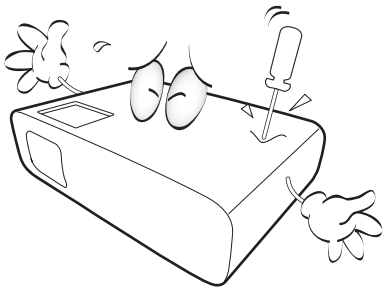

11. Do not block the ventilation holes.
    - Do not place this projector on a blanket, bedding or any other soft surface.
    - Do not cover this projector with a cloth or any other item.
    - Do not place inflammables near the projector.

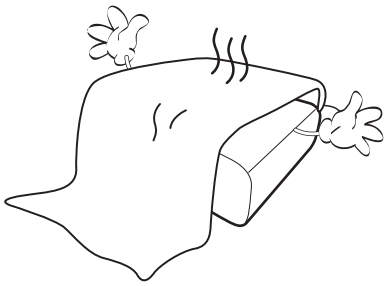

    If the ventilation holes are seriously obstructed, overheating inside the projector may result in a fire.

12. Always place the projector on a level, horizontal surface during operation.

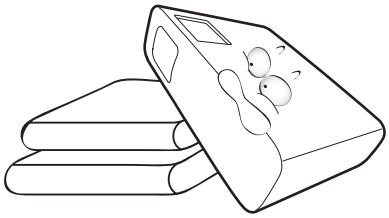

13. Do not stand the projector on end vertically. Doing so may cause the projector to fall over, causing injury or resulting in damage to the projector.

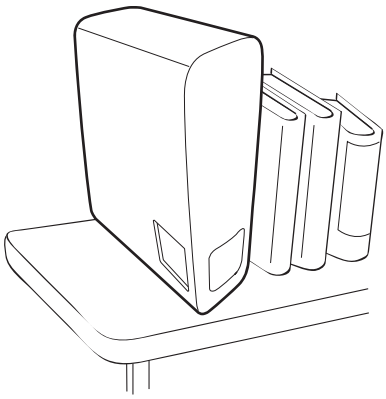

14. Do not step on the projector or place any objects upon it. Besides probable physical damage to the projector, doing so may result in accidents and possible injury.

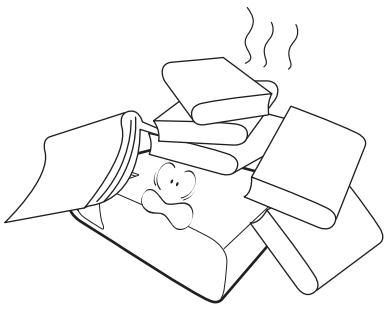

15. When the projector is under operation, you may sense some heated air and odor from its ventilation grill. It is a normal phenomenon and not a product defect.

16. Do not place liquids near or on the projector. Liquids spilled into the projector may cause it to fail. If the projector does become wet, disconnect it from the power supply's power outlet and call BenQ to have the projector serviced.

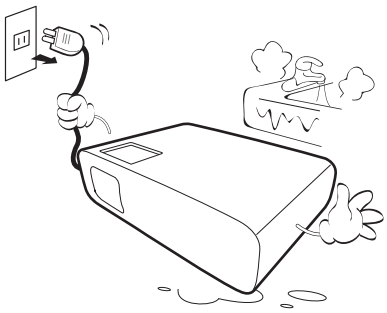

17. This product is capable of displaying inverted images for ceiling mount installation.

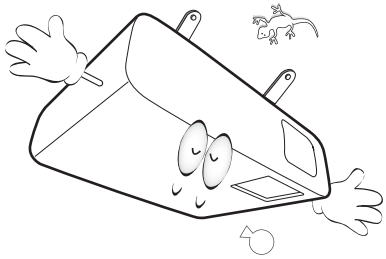

18. This apparatus must be earthed.

19. Do not place this projector in any of the following environments.
    - Space that is poorly ventilated or confined. Allow at least 50 cm clearance from walls and free flow of air around the projector.
    - Locations where temperatures may become excessively high, such as the inside of a car with all windows rolled up.
    - Locations where excessive humidity, dust, or cigarette smoke may contaminate optical components, shorten the projector's life span and darken the image.

    - Locations near fire alarms
    - Locations with an ambient temperature above 40°C / 104°F
    - Locations where the altitudes are higher than 3000 m (10000 feet).

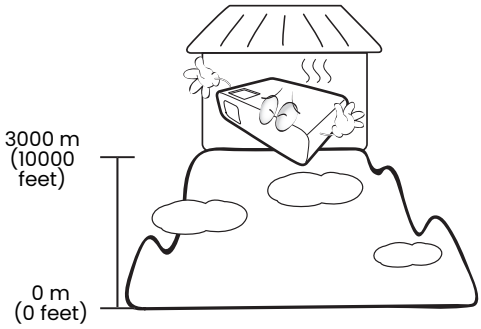

Risk Group 2

1. According to the classification of photobiological safety of light sources and light source systems, this product is Risk Group 2, IEC 62471-5:2015.
2. Possibly hazardous optical radiation emitted from this product.
3. Do not stare at operating light source. May be harmful to the eyes.
4. As with any bright source, do not stare into the direct beam.

To avoid damaging the DLP chips, never aim a high-power laser beam into the projection lens.

Introduction

Shipping contents

Carefully unpack and verify that you have all of the items shown below. If any of these items are missing, please contact your place of purchase.

Standard accessories

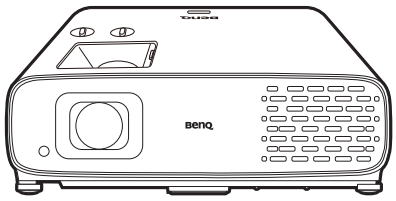	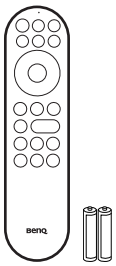	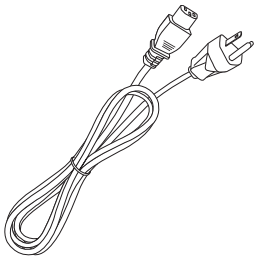
Projector	Remote control with batteries (Availability of batteries varies by region)	Power cord
	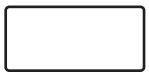	
Lens cover (pre-installed)	Calibration report	User documents
Android TV dongle (availability varies by region)		

- The supplied accessories will be suitable for your region, and may differ from those illustrated.
- *The warranty card is only supplied in some specific regions. Please consult your dealer for detailed information.

Replacing the remote control batteries

1. Press and slide off the battery cover, as illustrated.
2. Remove the old batteries (if applicable) and install two AAA batteries. Make sure that the positive and negative ends are positioned correctly, as illustrated.
3. Slide the battery cover in until it clicks into place.

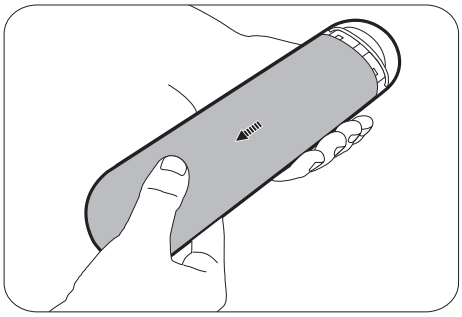

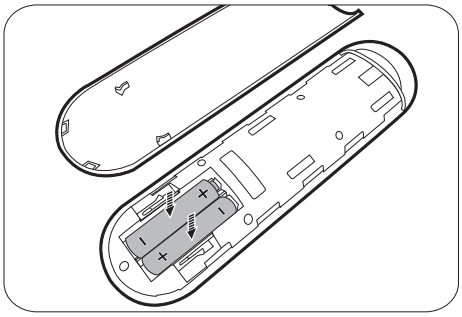

- Avoid leaving the remote control and batteries in an excessive heat or humid environment like the kitchen, bathroom, sauna, sunroom or in a closed car.
- Replace only with the same or equivalent type recommended by the battery manufacturer.
- Dispose of the used batteries according to the manufacturer's instructions and local environment regulations for your region.
- Never throw the batteries into a fire. There may be danger of an explosion.
- If the batteries are dead or if you will not be using the remote control for an extended period of time, remove the batteries to avoid damage to the remote control from possible battery leakage.

Installing the Android TV dongle (regional specific)

To install the dongle, see the instructions below. With a successful installation, you can enjoy more entertainment programs through this projector.

- Required for product supplied with an Android TV dongle.
- The supplied streaming dongle varies by region. In some of the regions, the Android TV dongle is supplied and you need to make installation and setup properly before use.

1. Make sure the projector is turned off and the power cord is disconnected.
2. Loosen the screw that secure the cover ①. Slide to remove the cover ②③.

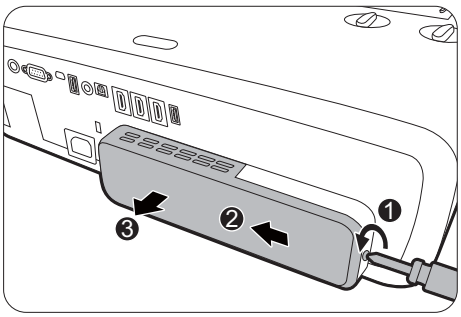

3. Plug the USB Micro B cable to the dongle.

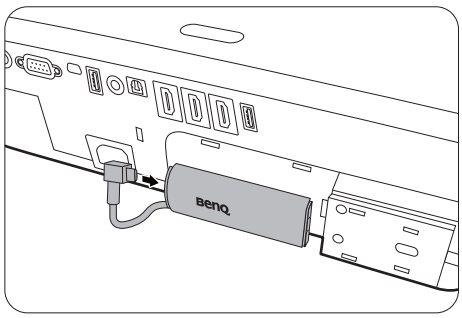

4. Plug the dongle to the HDMI* port on the projector.

   *This HDMI port is for connecting with the Android TV dongle only.

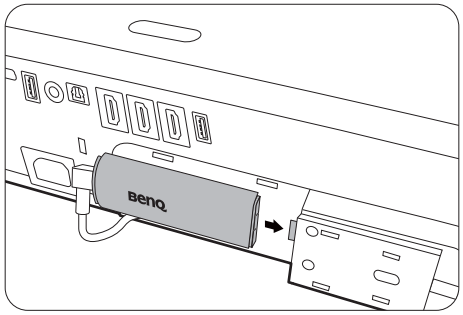

5. Fit the USB Micro B cable in place below the dongle.

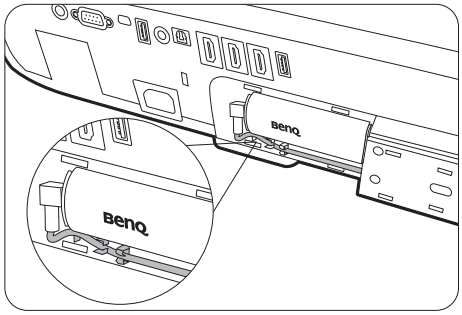

6. Replace the projector cover①②, and tighten the screw③.

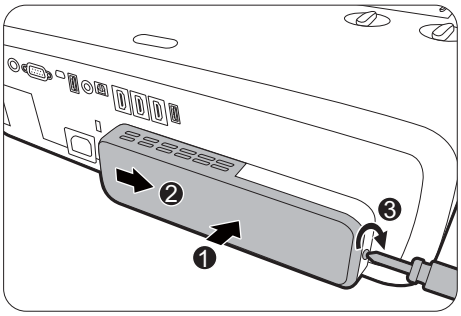

7. Connect the power cord to the projector and turn it on. Press ⊡/**SOURCE** to select **Android TV**.

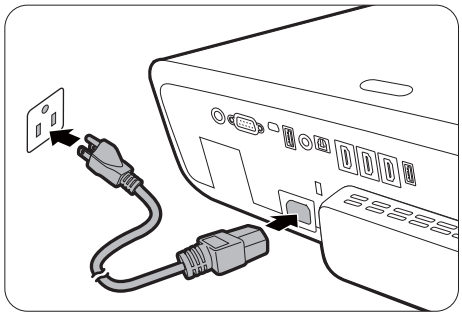

Projector exterior view

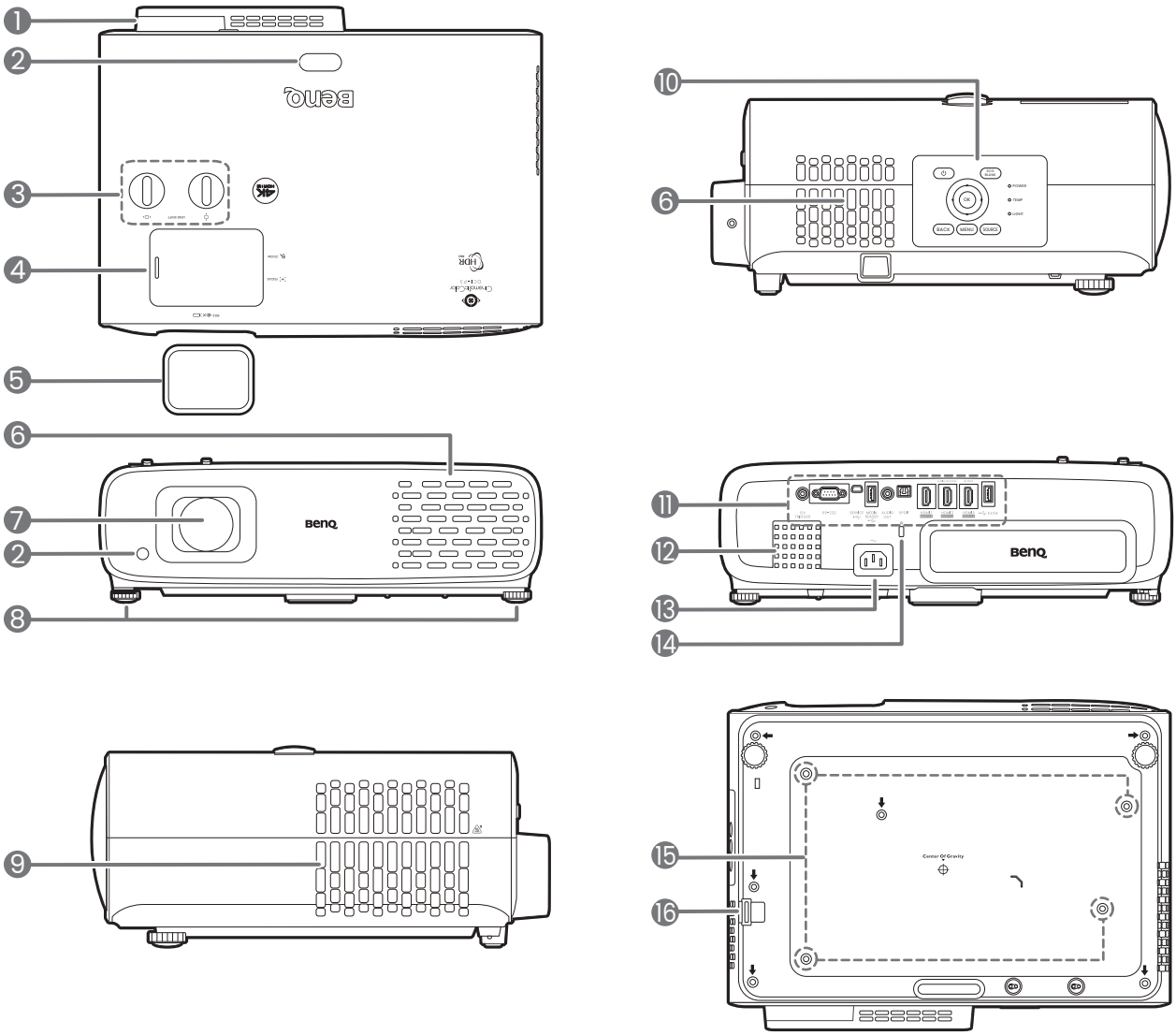

1. Android TV dongle port
   See Installing the Android TV dongle (regional specific) on page 10 for how to remove the cover.
2. IR remote sensor
3. Lens shift adjustment knobs
   (◂ ▭ ▸ Left/Right, ▲ ▭ ▼ Up/Down)
4. Sliding cover
   (Zoom ring and Focus ring inside)
5. Lens cover
6. Vent (air inlet)
7. Projection lens
8. Adjuster feet
9. Vent (air exhaust)
10. External control panel
    See Controls and functions on page 13.
11. Connector panel
    See Terminals on page 12.
12. Speaker grill
13. AC power jack
14. Kensington anti-theft lock slot
15. Ceiling mount holes
16. Anti-theft security bar

Terminals

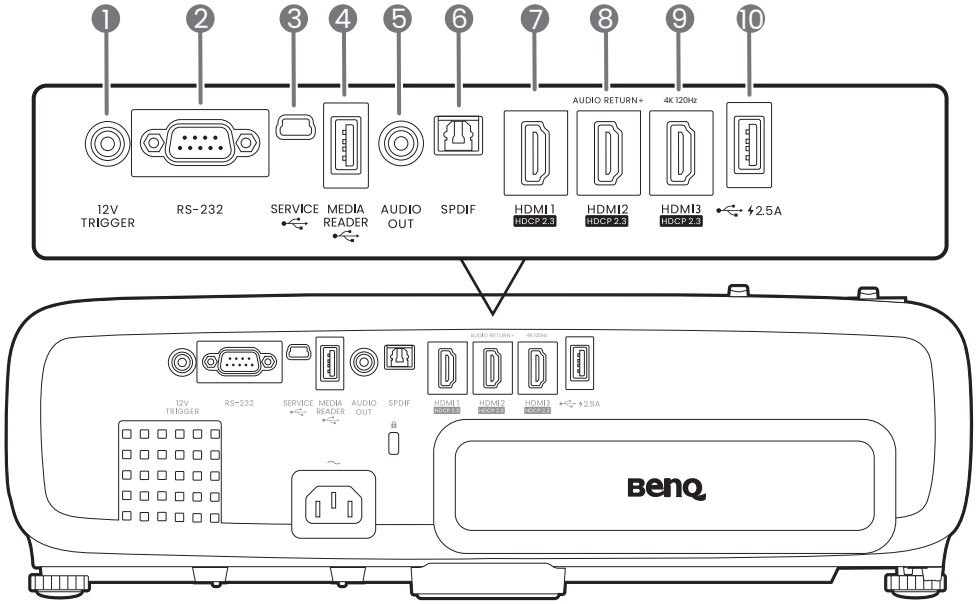

1. 12V DC output terminal
   - Triggers external devices such as an electric screen or light control, etc.
   - Compatible with 3.5 mm plug with two rings.
2. RS-232 control port
3. USB Mini B port (SERVICE)
   - For firmware update
4. USB 2.0 Type-A port (MEDIA READER)
   - Connects to a USB flash drive for reading multimedia files. See Presenting from a Media Reader on page 30.
5. Audio output jack
6. SPDIF audio output port
7. HDMI input port 1 (Version 2.1)
8. HDMI input port 2 (Version 2.1)
   - Supports Audio Return +
9. HDMI input port 3 (Version 2.1)
   - Supports 4K 120Hz
10. USB 2.0 Type-A port
    - Supports 2.5 A power supply under projector power-on status

Controls and functions

Projector & Remote control

All the key presses described in this document are available on the remote control or projector.

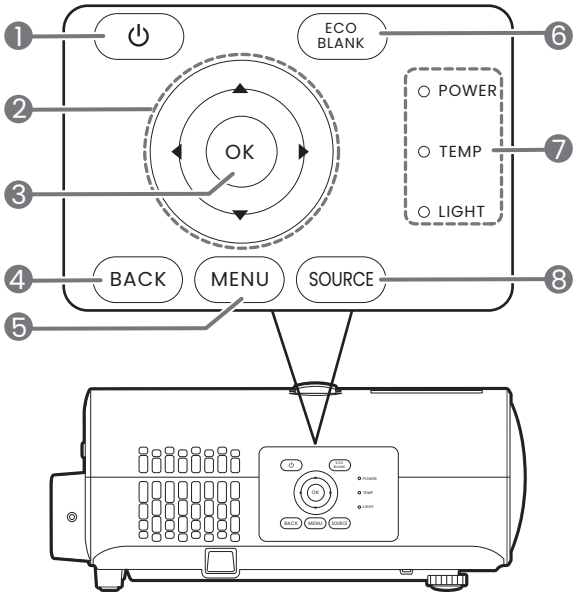

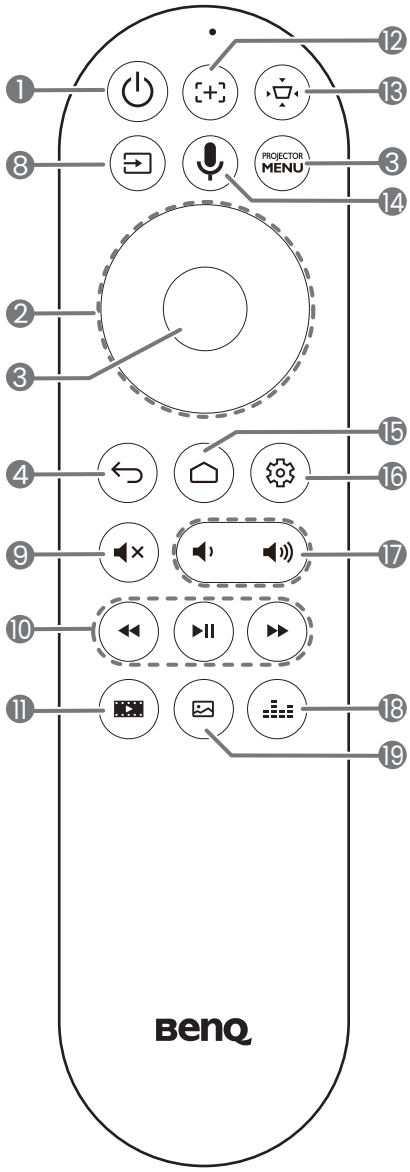

1. **POWER**

   Toggles the projector between standby mode and on.

2. ▲ / ▼ / ◀ / ▶

   When the On-Screen Display (OSD) or the ATV menu is activated, these keys are used as directional arrows to select the desired menu items and to make adjustments.

   When OSD and Android TV menu is inactive, workable under CEC-capable sources only.

3. **OK**

   - Confirms the selected Android TV or On-Screen Display (OSD) menu item.
   - Under ATV media playback, plays or pauses a video or audio file.

4. **BACK/**

   Goes back to previous OSD menu, exits and saves menu settings.

5. **MENU/**

   Turns on/off the On-Screen Display (OSD) menu.

6. **ECO BLANK**

   Used to hide the screen picture.

   Do not block the projection lens from projecting as this could cause the blocking object to become heated and deformed or even cause a fire.

7. **POWER/TEMP/LIGHT** status indicator
   See Indicators on page 53.

8. **SOURCE/**

   Displays the source selection bar.

9.

   Toggles projector audio between on and off.

10.

   Under ATV source, rewinds, plays/pauses, forwards multimedia files.

11.

   Switches to **FILMMAKER MODE**.

12.

   Press to open/close Auto focus page.

   *Not available on this model

13.

   Displays the keystone menu. See Correcting keystone on page 21 for details.

14.

   Press and hold to activate the voice assistant or voice search. Hold this key and speak to the microphone at the top of the remote control while using voice assistant.

15.

   Opens ATV Home page.

16.

   Under ATV source, opens the setting menu for the current application.

17.

   Decreases or increases the projector volume.

18.

   Displays the sound mode menu.

19.

   Displays the picture mode menu.

Remote control effective range

The remote control must be held at an angle within 30 degrees perpendicular to the projector's IR remote control sensor(s) to function correctly. The distance between the remote control and the sensor(s) should not exceed 8 meters (~ 26 feet).

Make sure that there are no obstacles between the remote control and the IR sensor(s) on the projector that might obstruct the infra-red beam.

- Operating the projector from the front

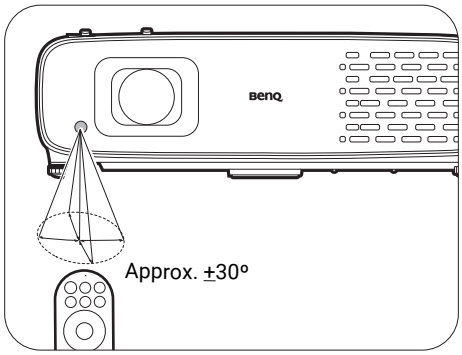

- Operating the projector from the top

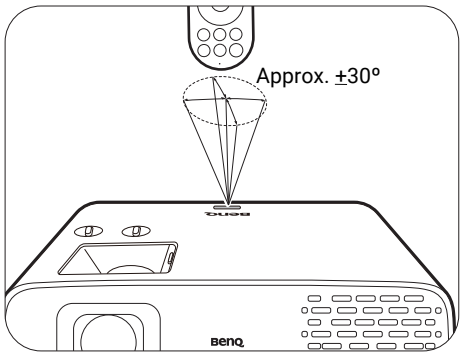

Positioning your projector

Choosing a location

Before choosing an installation location for your projector, take the following factors into consideration:

- Size and position of your screen
- Electrical outlet location
- Location and distance between the projector and the rest of your equipment

The projected image size and vertical offset depend on how far you place the projector, and the zoom setting you choose. There is more information from Projection dimensions on page 16 which can help decide exact distance and height of your projector.

You can install your projector in the following ways.

1. **Front**

   Select this location with the projector placed on the table in front of the screen. This is the most common way to position the projector for quick setup and portability.

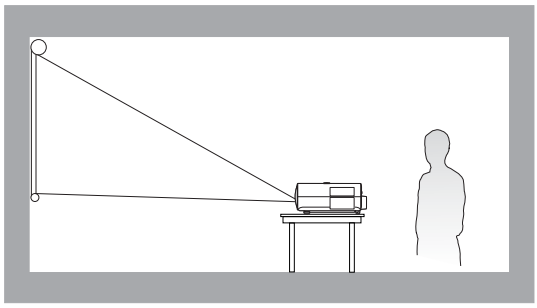

2. **Front Ceiling**

   Select this location with the projector suspended upside-down from the ceiling in front of the screen. Purchase the BenQ Projector Ceiling Mount Kit from your dealer to mount your projector on the ceiling.

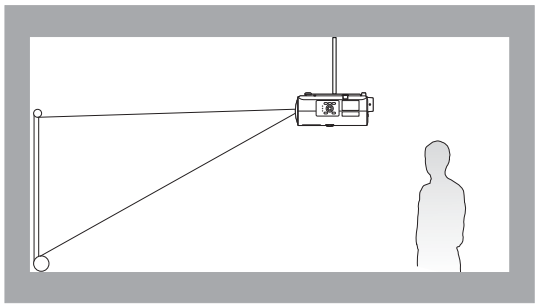

3. **Rear**

   Select this location with the projector placed on the table behind the screen. Note that a special rear projection screen is required.

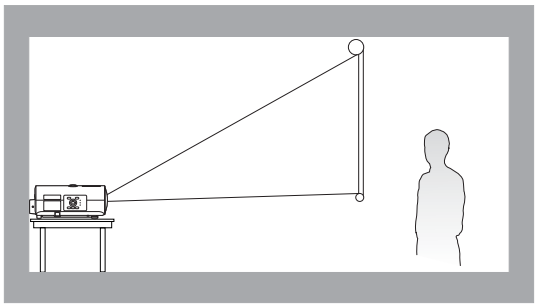

4. **Rear Ceiling**

   Select this location with the projector suspended upside-down from the ceiling behind the screen. Note that a special rear projection screen and the BenQ Projector Ceiling Mount Kit are required for this installation location.

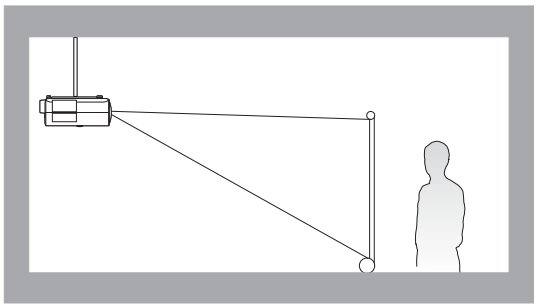

After turning on the projector, the projector will automatically select a suitable setting for the way the projector is installed. If not, go to the **Advanced** menu - **Installation** > **Projector Position**, press **OK** and press ◄/► to select a setting.

Obtaining a preferred projected image size

The distance from the projector lens to the screen, the zoom setting, and the video format each factors in the projected image size.

Projection dimensions

• The screen aspect ratio is 16:9 and the projected picture is in a 16:9 aspect ratio

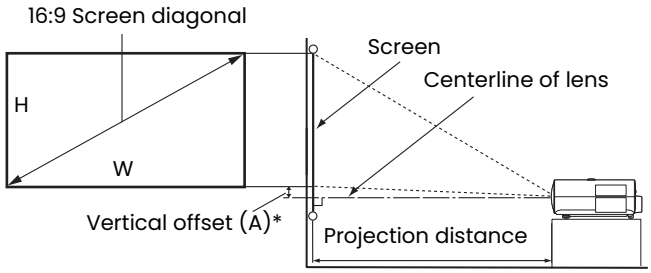

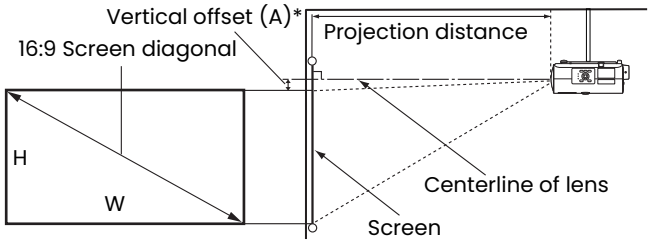

• *The vertical offset value is the vertical distance from the bottom edge of the image (when the projector is placed on a table, diagram on the left), or top edge of the image (when the projector is ceiling mounted, diagram on the right) to the centerline of lens.

• Due to the lens optical characteristics, every projector has its vertical offset ratio. The vertical offset value normally gets larger while the projection distance increases.

Screen size				Distance from screen (mm)			*Vertical offset (A)
Diagonal		H	W	Min length	Average	Max length	(Lowest/Highest lens position) (mm)
inch	mm	mm	mm	(max. zoom)		(min. zoom)	
30	762	374	664	744	860	977	37
40	1016	498	886	999	1154	1309	50
50	1270	623	1107	1253	1447	1641	62
60	1524	747	1328	1508	1740	1973	75
80	2032	996	1771	2017	2327	2637	100
95	2413	1183	2103	2399	2767	3135	118
100	2540	1245	2214	2526	2914	3301	125
110	2794	1370	2435	2781	3207	3633	137
120	3048	1494	2657	3035	3500	3965	149
130	3302	1619	2878	3290	3794	4297	162
140	3556	1743	3099	3545	4087	4629	174
150	3810	1868	3321	3799	4380	4961	187
160	4064	1992	3542	4054	4674	5293	199
170	4318	2117	3763	4308	4967	5626	212
180	4572	2241	3985	4563	5260	5958	224
190	4826	2366	4206	4817	5554	6290	237
200	5080	2491	4428	5072	5847	6622	249
250	6350	3113	5535	6345	7314	8282	311
300	7620	3736	6641	7618	8780	9942	374

For example, if you are using a 120-inch screen, the recommended projection distance is 3500 mm.

If your measured projection distance is 300 cm, the closest match in the "Distance from screen (mm)" column is 2914 mm. Looking across this row shows that a 100" (about 2.5 m) screen is required. The projected image will be slightly higher/lower than the lens centerline with 125 mm vertical offset.

To optimize your projection quality, we suggest doing the projection by referring to the values listed in the non-gray rows.

All measurements are approximate and may vary from the actual sizes.
BenQ recommends that if you intend to permanently install the projector, you should physically test the projection size and distance using the actual projector in situ before you permanently install it, so as to make allowance for this projector's optical characteristics. This will help you determine the exact mounting position so that it best suits your installation location.

Mounting the projector

If you intend to mount your projector, we strongly recommend that you use a proper fitting BenQ projector mounting kit and that you ensure it is securely and safely installed.

If you use a non-BenQ brand projector mounting kit, there is a safety risk that the projector may fall down due to an improper attachment through the use of the wrong gauge or length screws.

Before mounting the projector

- Purchase a BenQ projector mounting kit from the place you purchased your BenQ projector.
- BenQ recommends that you also use a security cable to secure both the base of the mounting bracket and the security bar on the projector. This will perform the secondary role of restraining the projector should its attachment to the mounting bracket become loose.
- Ask your dealer to install the projector for you. Installing the projector on your own may cause it to fall and result in injury.
- Take necessary procedures to prevent the projector from falling off such as during an earthquake.
- The warranty doesn’t cover any product damage caused by mounting the projector with a non-BenQ brand projector mounting kit.
- Consider the surrounding temperature where the projector is ceiling mounted. If a heater is used, the temperature around the ceiling may be higher than expected.
- Read the user manual for the mounting kit about the range of torque. Tightening with torque exceeding the recommended range may cause damage to the projector and subsequently falling off.
- Make sure the power outlet is at an accessible height so that you can easily shut down the projector.

Ceiling/Wall mount installation diagram

Ceiling/Wall mount screw: M4
(Max L = 25 mm; Min L = 20 mm)

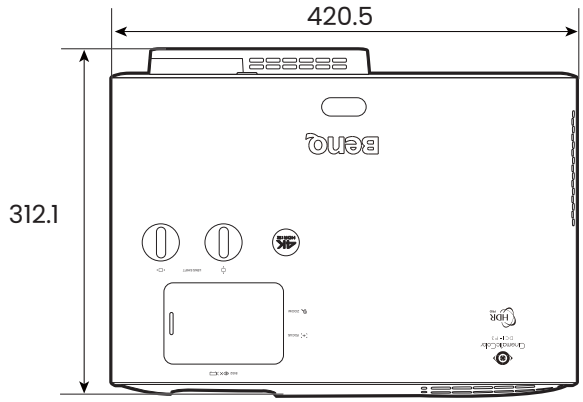

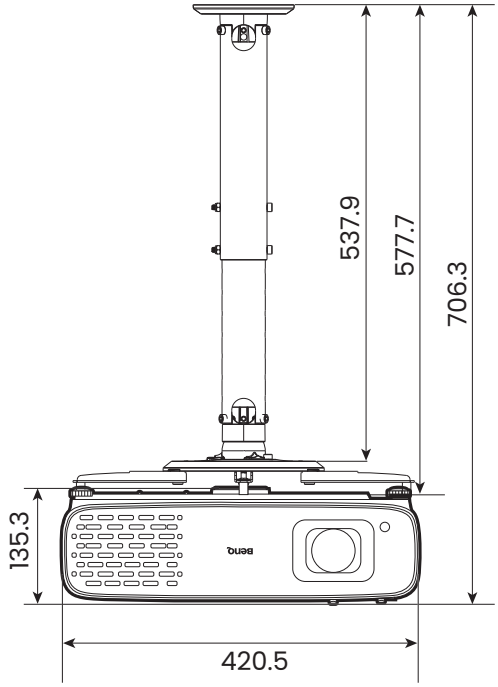

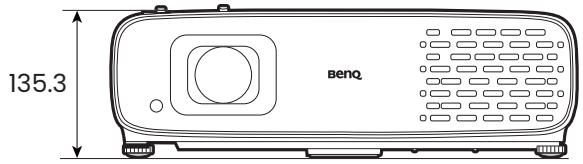

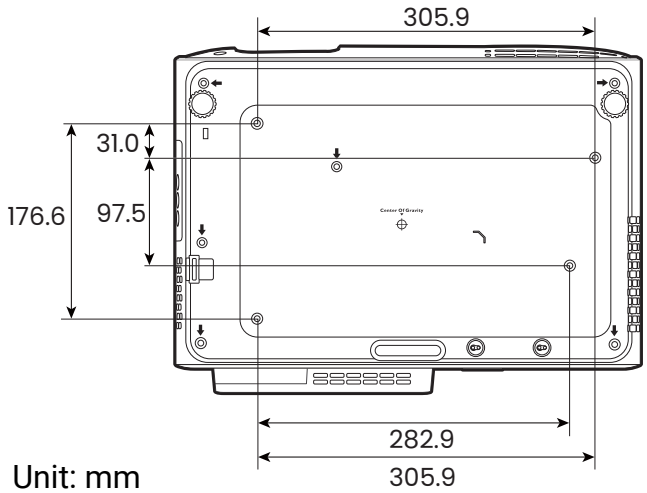

Unit: mm

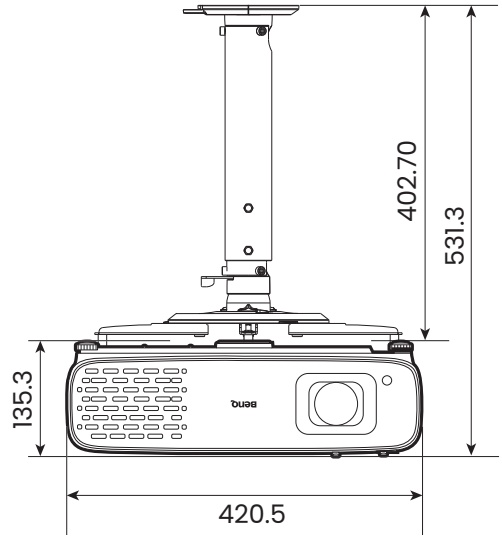

Please refer to the user manual of the mounting kit or contact BenQ service center if any installation problem occurs.

Adjusting the projector position

Shifting the projection lens

The lens shift control provides flexibility for installing your projector. It allows the projector to be positioned off the center of the screen.

The lens shift is expressed as a percentage of the projected image height or width. You can turn the knobs on the projector to shift the projection lens in any direction within the allowable range depending on your desired image position.

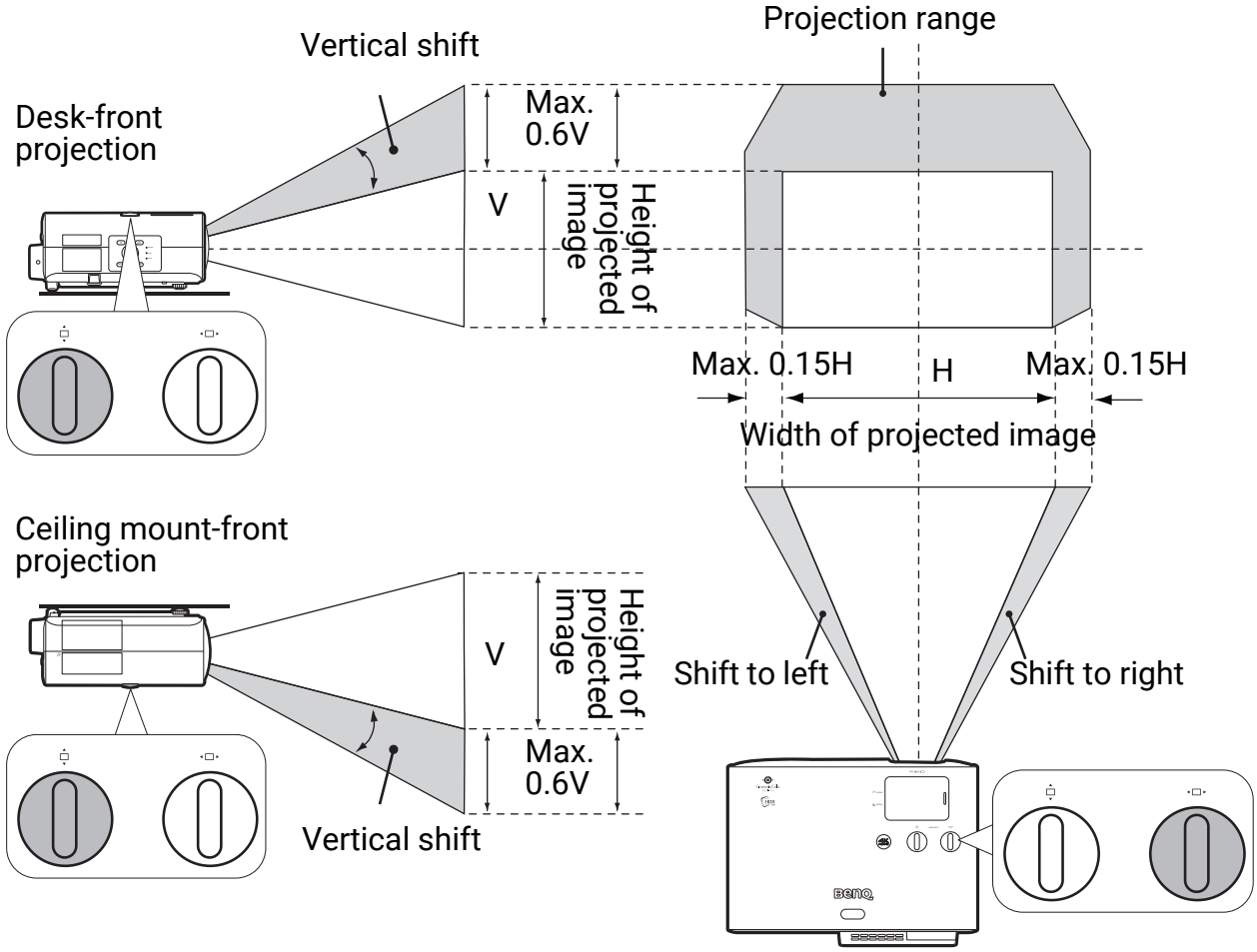

To reach the highest or lowest projection position:

1. Turn ▲□▼ (Up/Down).
2. When you feel it is reaching the limit, turn ◂□▸ to the left or right and turn ▲□▼ again.
3. Repeat the step above until the suitable position is found.

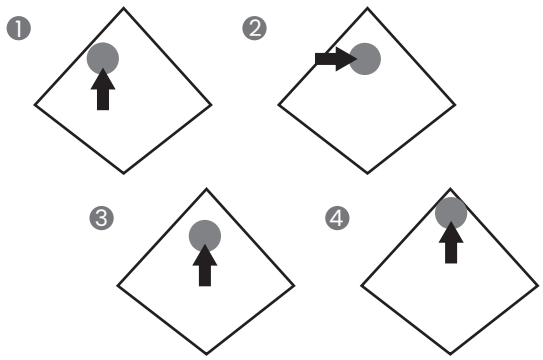

- Lens shift adjustment will not result in a degraded picture quality.
- Please stop turning the adjustment knob when you hear a clicking sound indicating that the knob has reached its limit. Over-turning the knob may cause damage.

Adjusting the projected image

Adjusting the projection angle

If the projector is not placed on a flat surface or the screen and the projector are not perpendicular to each other, the projected image becomes trapezoidal. You can screw the adjuster feet to fine-tune the horizontal angle.

To retract the feet, screw the adjuster feet in a reverse direction.

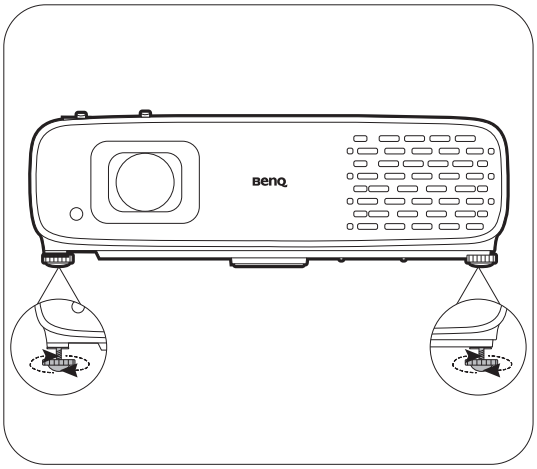

Do not look into the lens while the light source is on. The strong light from the light source may cause damage to your eyes.

Fine-tuning the image size and clarity

1. Adjust the projected image to the size that you need using the zoom ring.

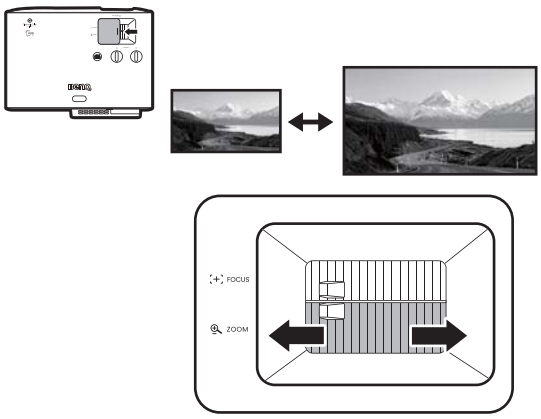

2. Sharpen the image by rotating the focus ring.

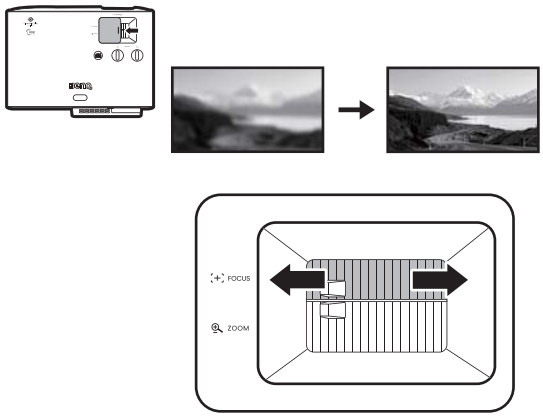

Correcting keystone

Keystoning refers to the situation where the projected image becomes a trapezoid due to angled projection.

To correct the distorted image:

1. Press on the remote control, or display the **2D Keystone** correction page from the following menus.
   - The setup wizard during the projector initial setup
   - The **Basic** menu system
   - The **Installation** menu of the **Advanced** menu system

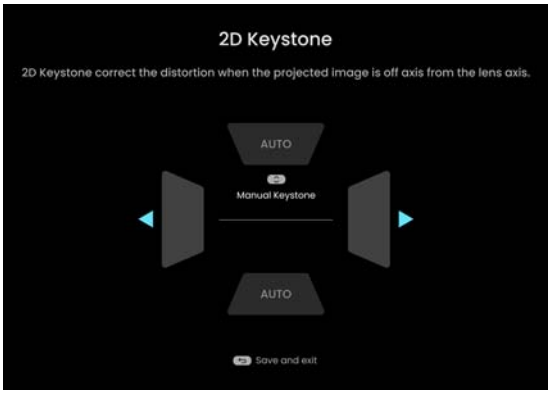

2. After the **2D Keystone** correction page appears:
   - To correct keystoning at the top of the image, use ▼.
   - To correct keystoning at the bottom of the image, use ▲.
   - To correct keystoning at the right side of the image, use ◄.
   - To correct keystoning at the left side of the image, use ►.
   - To reset the keystone values, press **BACK**/ for 2 seconds.
   - To automatically correct the vertical sides of the distorted image, press **OK** for 2 seconds.

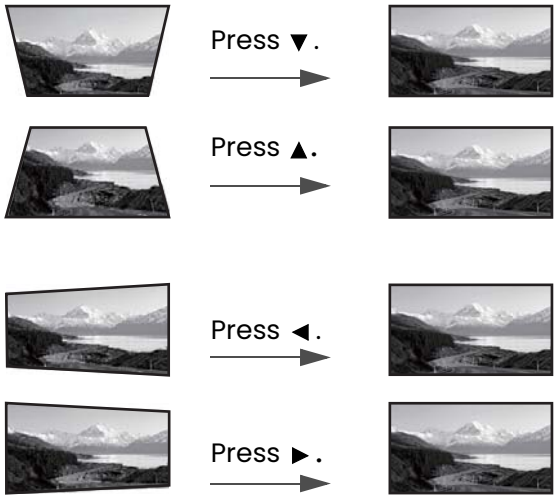

3. When done, press **BACK**/ to save your changes and exit.

Connection

When connecting a signal source to the projector, be sure to:

1. Turn all equipment off before making any connections.
2. Use the correct signal cables for each source.
3. Ensure the cables are firmly inserted.

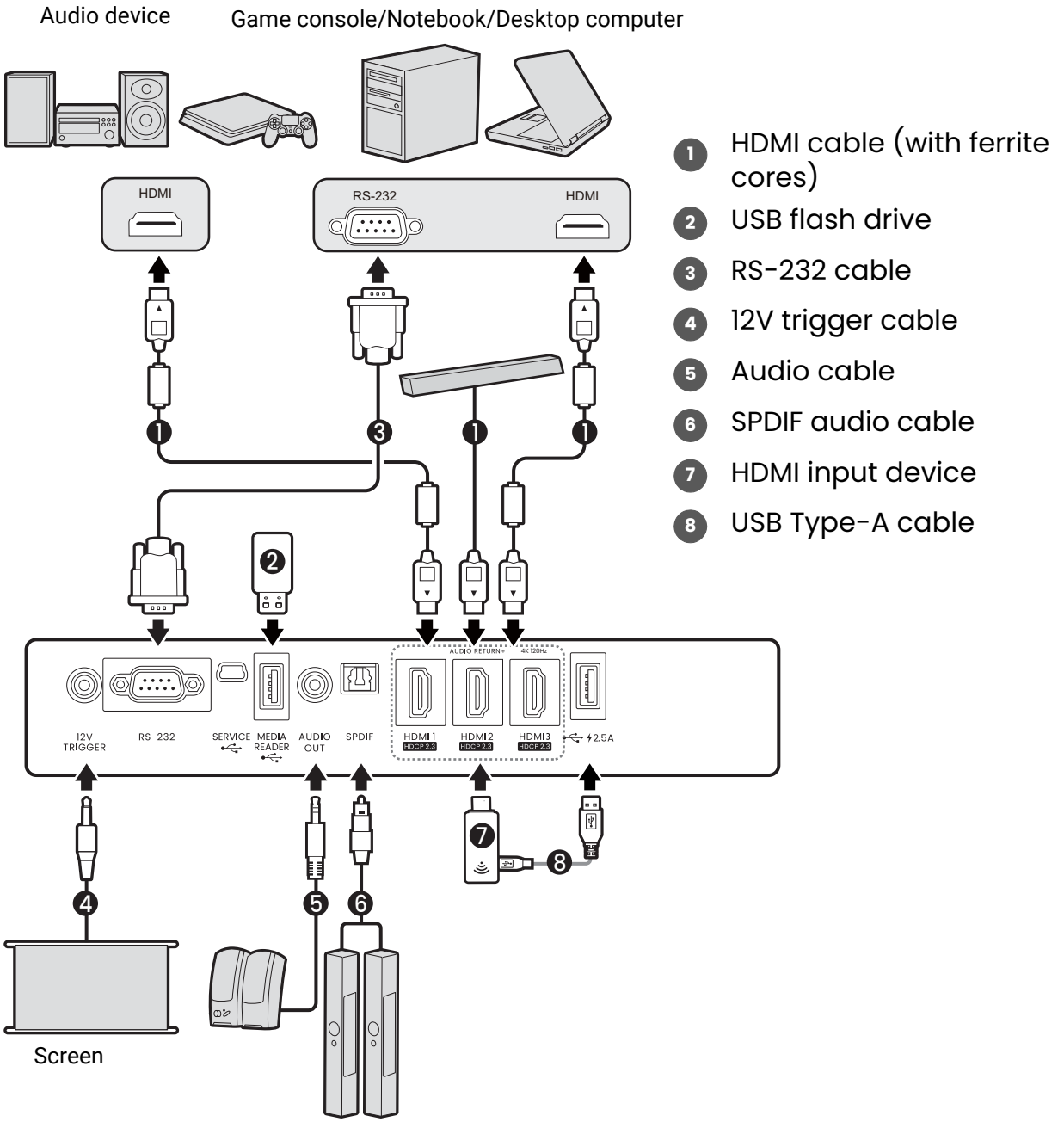

- In the connections above, some cables may not be included with the projector (see Shipping contents on page 8). They are commercially available from electronics stores.
- The connection illustrations are for reference only. The rear connecting jacks available on the projector vary with each projector model.
- Many notebooks do not turn on their external video ports when connected to a projector. Usually a key combo like FN + function key with a monitor symbol turns the external display on/off. Press FN and the labeled function key simultaneously. Refer to your notebook's documentation to find your notebook's key combination.
- If the selected video image is not displayed after the projector is turned on and the correct video source has been selected, check that the video source device is turned on and operating correctly. Also check that the signal cables have been connected correctly.

Operation

Starting up the projector

1. Plug the power cord. Turn on the power outlet switch (where fitted). The power indicator on the projector lights orange after power has been applied.

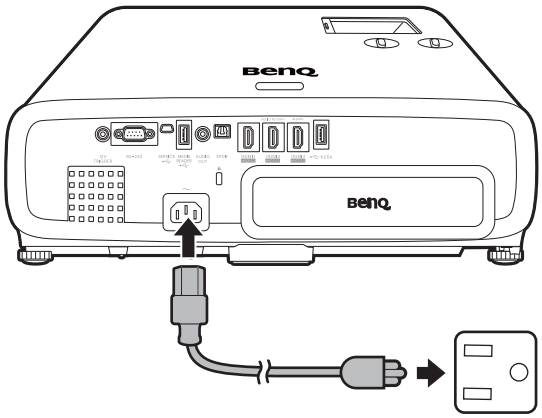

2. Press ⏻ on the projector or remote control to start the projector. The power indicator flashes green and stays green when the projector is on.

   The start up procedure takes about 15 seconds. In the later stage of starting up, a start-up logo is projected.

   (If necessary) Rotate the focus ring to adjust the image clearness.

3. If this is the first time you turn on the projector, the setup wizard appears to guide you through setting up the projector. If you have already done this, skip this step and move on to the next step.
   - Use the arrow keys (◄/►/▲/▼) on the projector or remote control to move through the menu items.
   - Use **OK** to confirm the selected menu item.

Step 1:

Specify **Projector Position**.

For more information about projector position, see Choosing a location on page 15.

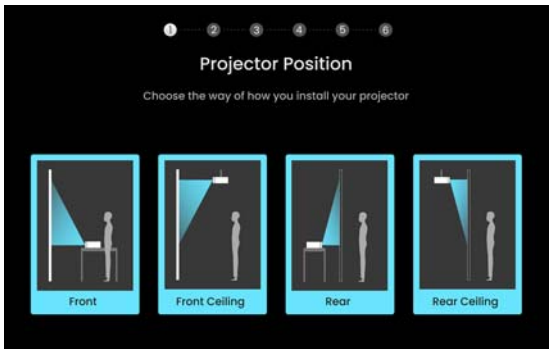

Step 2:

Specify OSD **Language**.

Step 3:

Confirm whether you want to connect to an eARC device.

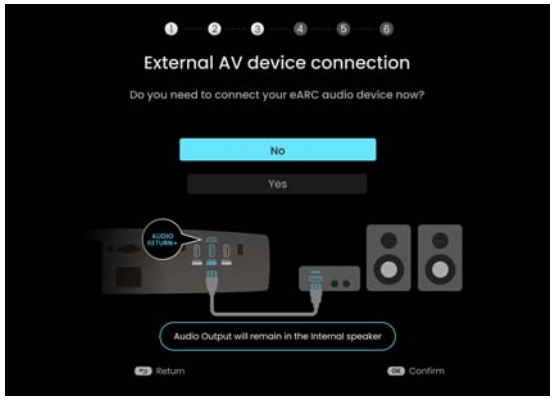

Step 4:

Adjust the image based on the environment in which the projector is installed.

- **Screen installed**: faster installation with digital image adjustment. This option performs image corner adjustments.
- **No screen installed**: faster installation with digital image adjustment. This option performs 2D keystone.
- **Skip**: This option does not make image adjustment at this moment.

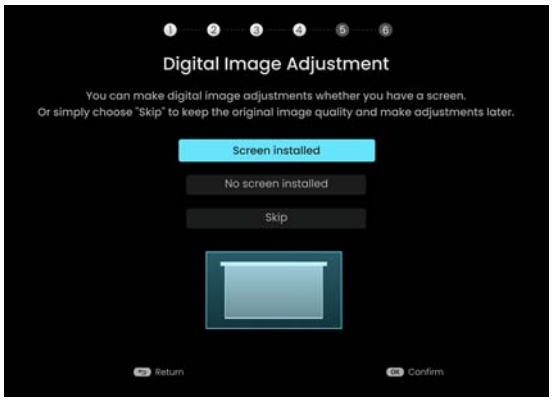

Using image adjustments in this step will slightly alter the image quality. If you do not want the image quality to be altered, select **Skip**.

Step 4-1:

Adjust the image corners.

For more information, see Corner Fit on page 44.

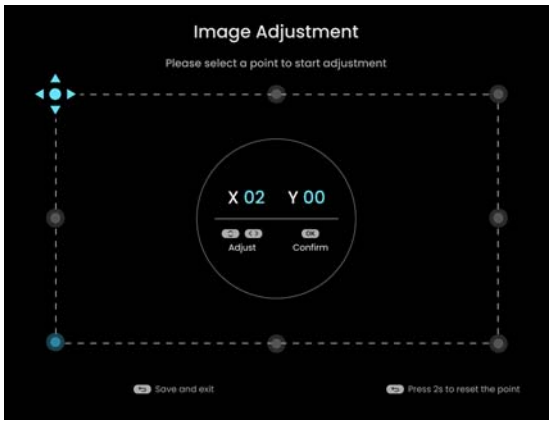

Step 4-2:

Specify **2D Keystone** and choose to activate auto vertical keystone.

For more information about keystone, see Correcting keystone on page 21.

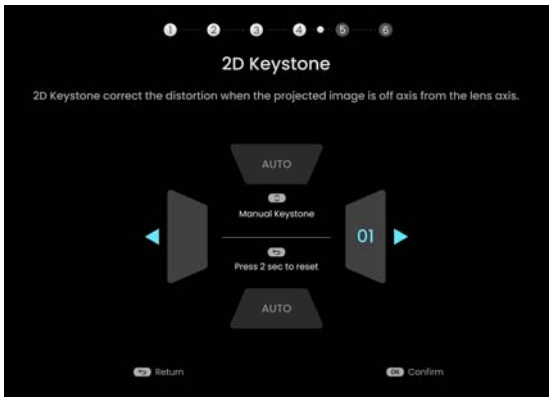

Step 5:

Agree the End User License Agreement.

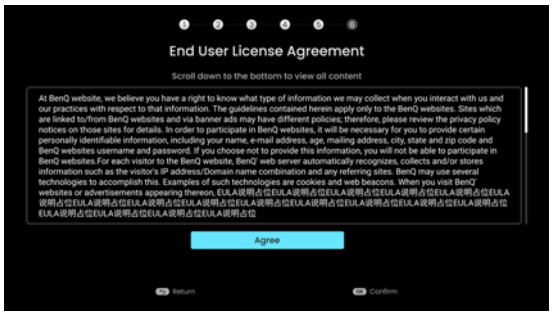

Step 6:

Pair the remote control with the Android TV dongle.

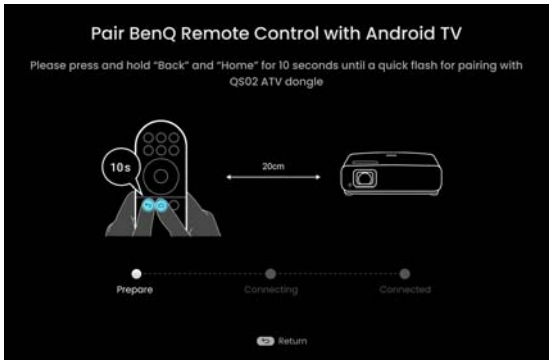

4. Switch all of the connected equipment on.
5. The projector will search for input signals. The current input signal being scanned appears. If the projector does not detect a valid signal, the message “No Signal” will appear until an input signal is found.

   You can also press **SOURCE**/ to select your desired input signal. See Switching input signal on page 29.

- Please use the original accessories (e.g. power cord) to avoid possible dangers such as electric shock and fire.
- If the projector is still hot from previous activity, it will run the cooling fan for approximately 90 seconds before energizing the light source.

- The Setup Wizard screenshots are for reference only and may differ from the actual design.
- If the frequency/resolution of the input signal exceeds the projector's operating range, you will see the message “Out of Range” displayed on the background screen. Please change to an input signal which is compatible with the projector's resolution or set the input signal to a lower setting. See Timing chart on page 57.
- If no signal is detected for 3 minutes, the projector automatically enters saving mode.

Setting up the Android TV dongle (regional specific)

- Required for product supplied with the Android TV dongle.
- You should install the dongle first as instructed in Installing the Android TV dongle (regional specific) on page 10.
- Screens and procedures vary by product. Simply follow the on-screen instructions.

Before you start

Check that you have:

- A Wi-Fi Internet Connection
- A Google Account

Set up your device

There are 3 options to set up your device:

- Quick Setup using an Android phone

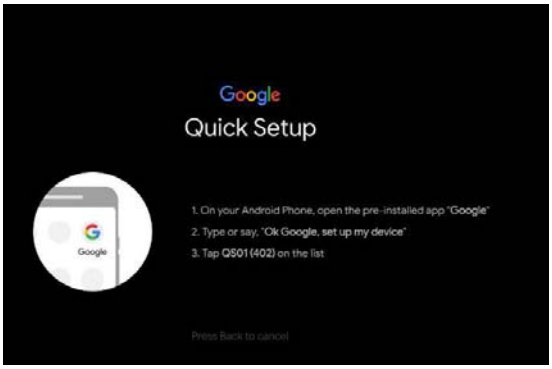

- Using your phone or computer

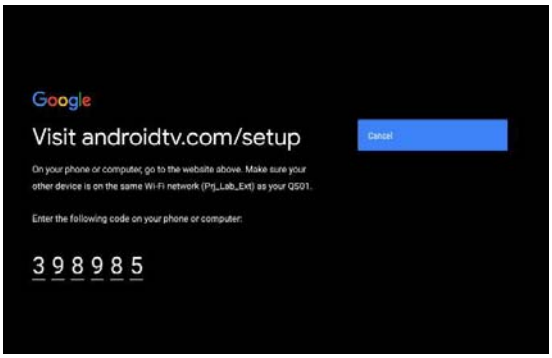

- Using your remote control

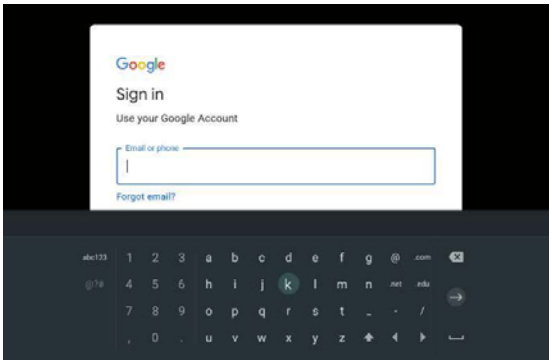

Display Android TV home screen

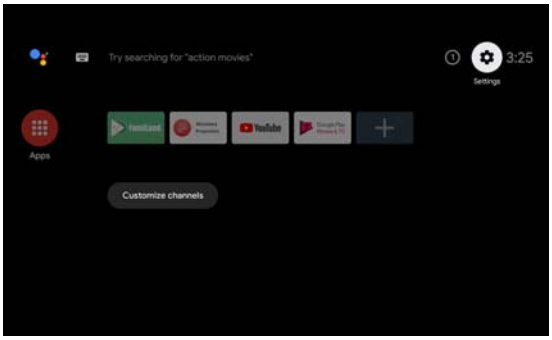

- For more information, visit https://support.google.com/androidtv/.
- Refer to the user documentations of your Android TV dongle for further operating instructions.

Using the menus

The projector is equipped with 2 types of On-Screen Display (OSD) menus for making various adjustments and settings. The **Basic** OSD menu provides primary menu functions while the **Advanced** OSD menu provides full menu functions.

To access the OSD menu, press **MENU**/ on the projector or remote control.

- Use the arrow keys (▲/▼/◄/►) on the projector or remote control to move through the menu items.
- Use **OK** on the projector or remote control to confirm the selected menu item.

The first time you use the projector (after finishing the initial setup), press **MENU**/, and the **Basic** OSD menu will be displayed.

If you intend to switch from the **Basic** OSD menu to the **Advanced** OSD menu, select **Advanced Menu** and press **OK**. Your projector will switch to the **Advanced** OSD menu.

Likewise, when you wish to switch from the **Advanced** OSD menu to the **Basic** OSD menu, follow the instructions below:

1. Go to **System** > **Menu Settings** > **Menu Type** and press **OK**.
2. Use ▲/▼ to select **Basic** and press **OK**. Your projector will switch to the **Basic** OSD menu.

Overview of the **Basic** OSD menu.

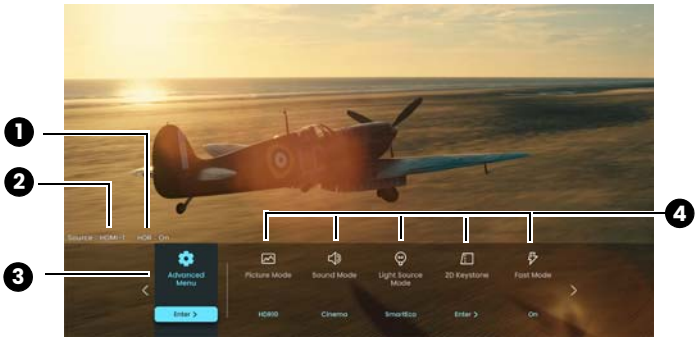

❶ **HDR** status

❷ Current input signal

❸ **Advanced** menu

❹ Main menus

Overview of the **Advanced** OSD menu.

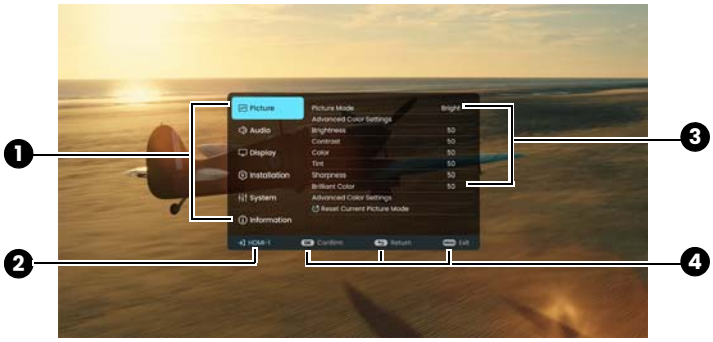

❶ Main menu

❷ Current input signal

❸ Sub-menu and status

❹ Function keys

The OSD screenshots are for reference only, and may differ from the actual design.

Securing the projector

The projector has to be installed in a safe place to prevent theft. Otherwise, purchase a security cable to secure the projector. A security bar is located on the right side of the projector. See item 16 on page 11. Insert a security cable to the opening of the security bar and secure it to a nearby fixture or heavy furniture.

You can also purchase a lock, such as the Kensington lock, to secure the projector. There is a Kensington lock slot on the rear side of the projector. See item 14 on page 11. A Kensington security cable lock is usually a combination of key(s) and the lock. Refer to the lock's documentation for finding out how to use it.

Switching input signal

The projector can be connected to multiple devices at the same time. However, it can only display one full screen at a time. When starting up, the projector automatically searches for the available signals.

Be sure the **Advanced** menu - **Display** > **Auto Source Search** is **On** if you want the projector to automatically search for the signals.

To manually select the source:

1. Press **SOURCE**/. A source selection bar appears.
2. Press ▲/▼ until your desired signal is selected and press **OK**.

   Once detected, the picture from the selected source will appear. If there is multiple equipment connected to the projector, repeat steps 1-2 to search for another signal.

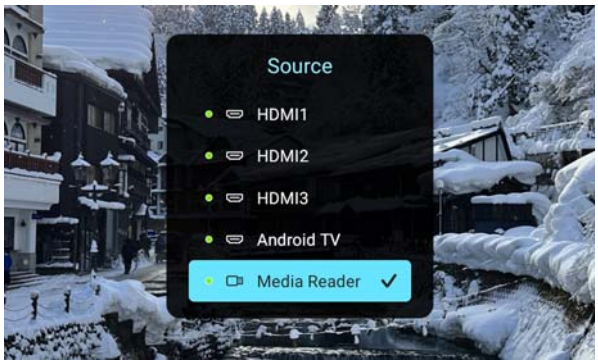

- The brightness level of the projected image will change accordingly when you switch between different input signals.
- For best display picture results, you should select and use an input signal which outputs at the projector's native resolution. Any other resolutions will be scaled by the projector depending upon the "aspect ratio" setting, which may cause some image distortion or loss of picture clarity. See Aspect Ratio on page 41.

Presenting from a Media Reader

The MEDIA READER (USB) port on the projector allows you to browse the image and document files stored on a USB flash drive connected to the projector. It can eliminate the need for a computer source.

Supported file formats

Music	Video	Photo
• MP3 (.mp3) • MP2 (.mp2) • M4A (.m4a) • Lossless (.flac) • WAV (.wav)	• AVI (.avi) • MOV (.mov) • MPEG program stream (.mpg, .mp4) • 3GP (.3gp, .3g2) • ASF (.asf) • VOB (.vob) • DAT (.dat) • TS (.ts) • MPEG-4 (.m4v) • FLV (.flv)	• JPG/JPEG • BMP • PNG

Viewing files

1. Plug a USB flash drive into the **MEDIA READER** port on the back of the projector.
2. Press **SOURCE**/ and select **Media Reader**. The projector displays the built-in media reader main page.
3. Press ▲/▼ to select the file type and press ► to enter the local disk device.
4. Select the folder or a file you want to display and press **OK**.
5. After a file is displayed, press **OK** to call out the function bar. You can press ◄/► to select the function and press **OK** to enact the selected item.

Shutting down the projector

1. Press ⏻ and a confirmation message will appear prompting you. If you don't respond in a few seconds, the message will disappear.
2. Press ⏻ a second time. The power indicator flashes orange, the projection light source shuts down, and the fans will continue to run for approximately 15 seconds to cool down the projector.
3. Once the cooling process finishes, the power indicator becomes a steady orange and fans stop. Disconnect the power cord from the power outlet.

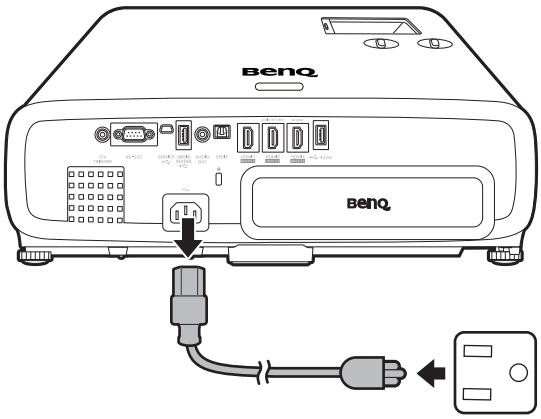

To protect the light source, the projector will not respond to any commands during the cooling process.

Menu operation

Please note that the on-screen display (OSD) menus vary according to the signal type selected and the projector model you are using.

The menu items are available when the projector detects at least one valid signal. If there is no equipment connected to the projector or no signal detected, limited menu items are accessible.

Basic menu

Structure

Menu	(Ref. Page)	Options	
Advanced Menu	(47)		
Picture Mode	(34)	**Bright/Bright Cinema/AI Cinema/Cinema/ FILMMAKER MODE/3D/HDR AI Cinema/HDR10/ FILMMAKER MODE (HDR)/HDR10+/ HLG/ISF Night/ISF Day/User**	
Sound Mode	(40)	**Cinema/Music/Game/Sports**	
Light Source Mode	(39)	**Normal/ECO/Low Dynamic/High Dynamic**	
Digital Image Adjustment	(44)	**2D Keystone**	**H: -30 – +30**
			V: -30 – +30
	(44)	**Corner Fit**	**Top Left/Top Right/ Bottom Left/Bottom Right**
Mask	(44)	**Top/Bottom/Left/Right/Reset**	
Fast Mode	(36)	**Off/On/ALLM**	
HDR Brightness	(39)	**-2/-1/0/1/2**	
Information	(49)	**Detected Resolution**	
		Picture Mode	
		Light Source Mode	
		3D Format	
		Color System	
		Light Source Usage Time	
		Firmware Version	
		Service Code	
Edit		**Move**	Changes the order of menu options.
		Show/Hide	Shows or hides certain menu options.

Advanced menu

1. Main menu: **Picture**

Structure

Menu			Options	
Picture Mode			Bright/Bright Cinema/ AI Cinema/Cinema/ FILMMAKER MODE/3D/ HDR AI Cinema/HDR10/ FILMMAKER MODE (HDR)/HDR10+/ HLG/ISF Night/ISF Day/User	
User Management	Load Settings From		Bright Cinema/ FILMMAKER MODE/ Cinema	
	Rename User Mode			
Fast Mode			Off/On/ALLM	
Brightness			0–100	
Contrast			0–100	
Color			0–100	
Tint			0–100	
Sharpness			0–15	
Advanced Color Settings	Gamma Selection		1.8/2.0/2.1/2.2/2.3/2.4/2.5/2.6/BenQ	
	Color Temperature Tuning	Color Temperature	Native (for Bright picture mode)	
			Normal/Cool/Warm (for the rest of the picture modes)	
		R Gain/ G Gain/ B Gain	0–200	
		R Offset/ G Offset/ B Offset	0–511	
		Reset Color Temperature Tuning		
	Adv. Color Temperature Tuning	5%/10%/20%/ 30%/40%/50%/ 60%/70%/80%/ 90%/100%	R/G/B	0–100
		Reset		
	Color Management	R/G/B/C/M/Y/F	Hue/Saturation/Gain	
		W	R Gain/G Gain/B Gain	
		Reset		
	Wide Color Gamut		Off/On	

Advanced Color Settings (Continued)	CinemaMaster	Color Enhancer	0–18
		Pixel Enhancer 4K	0–20
		Motion Enhancer 4K	Off/Low/Middle/High
		Global Contrast Enhancer	Off/Low/Middle/High
		Local Contrast Enhancer	Off/Low/Middle/High
		Dynamic Tone Mapping	Off/On
	Light Source Mode		Normal/ECO/Low Dynamic/ High Dynamic
	HDR Brightness		-2/-1/0/1/2
	Noise Reduction		Off/Low/Middle/High
Reset Current Picture Mode			Reset/Cancel

Function descriptions

Menu	Descriptions
Picture Mode	The projector is preset with several predefined picture modes so that you can choose one to suit your operating environment and input signal picture type. • **Bright** Maximizes the brightness of the projected image. This mode is suitable for environments where extra-high brightness is required, such as using the projector in well lit rooms. • **Bright Cinema** Offers 100% REC709 color gamut at higher brightness level, this mode is suitable for playing movies in a dim environment like living room with a small amount of ambient light. • **AI Cinema** Automatically optimizes the image quality by adjusting parameters such as saturation, brightness, contrast and picture mode in real time based on changes of the projected content. • **Cinema** Offers 100% REC709 color gamut and deepest contrast at lower brightness level, this mode is suitable for playing movies in a totally dark environment, as if in a commercial cinema. • **FILMMAKER MODE** This mode is best for watching movies with accurate color and the deepest contrast at lower brightness level in rooms with a bit of ambient light, as if in a commercial cinema. • When this mode is selected, **24P True Cinema** will be set to **On** automatically . • If **FILMMAKER MODE** is changed to others, **24P True Cinema** will revert to the previous setting.

Picture Mode	• **3D** Optimized to bring up 3D effects when watching 3D contents. This mode is only available when 3D function is enabled. • **HDR AI Cinema** Delivers High Dynamic Range effects with higher contrasts of brightness and colors for HDR content while automatically optimizing the image quality in real time based on changes of the projected content. • **HDR10** Delivers High Dynamic Range effects with higher contrasts of brightness and colors for HDR Blu-ray movies. After auto-detecting metadata or EOTF info from HDR10 contents, **HDR10** is available for selection. • **FILMMAKER MODE (HDR)** Delivers High Dynamic Range effects with higher contrasts of brightness and colors for HDR Blu-ray movies. After auto-detecting metadata or EOTF info from HDR10 contents, **FILMMAKER MODE (HDR)** is available for selection. • **HDR10+** Delivers High Dynamic Range effects with higher contrasts of brightness and colors for HDR Blu-ray movies. This mode is only available when HDR10+ content is detected. When **HDR10+** is selected, **HDR Brightness** will be grayed out. • **HLG** Delivers High Dynamic Range effects with higher contrasts of brightness and colors. **Picture Mode** will be switched to **HLG** automatically while detecting metadata or EOTF info from HLG streaming contents. • **ISF Day** Only available when ISF is enabled. • **ISF Night** Only available when ISF is enabled. • **User** Recalls the settings customized based on the current available picture modes. See User Management on page 36.

User Management	There is one user-definable mode if the current available picture modes are not suitable for your need. You can use one of the picture modes (except the **User**) as a starting point and customize the settings. • **Load Settings From** 1. Go to **Picture** > **Picture Mode**. 2. Press ◄/► to select **User**. 3. Press ▼ to highlight **User Management**, and press **OK**. The **User Management** page is displayed. 4. Select **Load Settings From** and press **OK**. 5. Press ▼/▲ to select a picture mode that is closest to your need. 6. Press **OK** and **BACK** to return to the **Picture** menu. 7. Press ▼ to select the sub-menu items you want to change and adjust the values with ◄/►. The adjustments define the selected user mode. • **Rename User Mode** Select to rename the customized picture mode (**User).** The new name can be up to 9 characters including English letters (A-Z, a-z), digits (0-9), and space (_). 1. Go to **Picture** > **Picture Mode**. 2. Press ◄/► to select **User**. 3. Press ▼ to highlight **User Management**, and press **OK**. The **User Management** page is displayed. 4. Press ▼ to highlight **Rename User Mode** and press **OK**. The **Rename User Mode** page is displayed. 5. Use ▲/►/▼/◄, and **OK** to set desired characters. 6. Press **BACK**/(⮌) and ▼ to highlight **Commit**, and press **OK**. 7. Press **BACK**/(⮌) to save the change and exit.
Fast Mode	The following projector settings can minimize the response time between the input source and the displayed image. Please set your projector OSD and input timing at these conditions to enjoy low latency gaming experience. • 0 for the **Advanced** menu - **Installation** > **2D Keystone** • **Auto** for the **Advanced** menu - **Display** > **Aspect Ratio** • 4K 60Hz, or 1080p 60Hz/120Hz/240Hz for the input timing • **Fast Mode** Minimizes the response time between the input source and the displayed image. **ALLM** denotes Auto Low-latency Mode. **Fast Mode** can only be enabled for below input timing adopted by most of popular games: • 1080p 60Hz/120Hz/240Hz • 4K 60Hz
Brightness	The higher the value, the brighter the image. Adjust this control so the black areas of the image appear just as black and that detail in the dark areas is visible.
Contrast	The higher the value, the greater the contrast. Use this to set the peak white level after you have previously adjusted the Brightness setting to suit your selected input and viewing environment.

Color	Adjusts the color saturation level - the amount of each color in a video picture. Lower settings produce less saturated colors; setting to the minimum value makes the image black and white. If the setting is too high, colors on the image will be overpowering, which makes the image unrealistic.
Tint	Adjusts the red and green color tones of the picture. The higher the value, the more greenish the picture becomes. The lower the value, the more reddish the picture becomes.
Sharpness	Adjust the picture to look sharper or softer. The higher the value, the sharper the picture becomes.
Advanced Color Settings	• **Gamma Selection** Gamma refers to the relationship between input source and picture brightness. • **1.8/2.0/2.1/BenQ**: Select these values according to your preference. • **2.2/2.3**: Increases the average brightness of the picture. Best for a lit environment, meeting room or family room. • **2.4/2.5**: Best for viewing movies in a dark environment. • **2.6**: Best for viewing movies which are mostly composed of dark scenes. 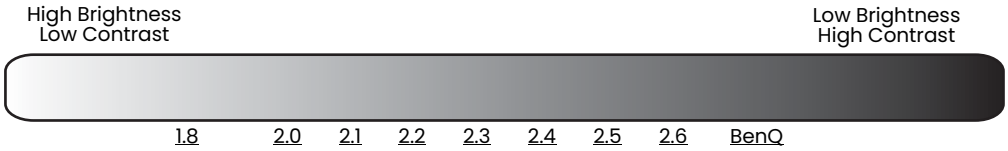 • **Color Temperature Tuning** There are several preset color temperature settings available. The available settings may vary according to the signal type selected. When **Bright** is selected for **Picture Mode**, the color temperature switches to **Native**, and cannot be changed. • **Native**: With the light source's original color temperature and higher brightness, this setting is suitable for environments where high brightness is required, such as projecting pictures in well lit rooms. • **Normal**: Maintains normal colorings for white. • **Cool**: Makes images appear bluish white. • **Warm**: Makes images appear reddish white. You can also set a preferred color temperature by adjusting the following options. • **R Gain/G Gain/B Gain**: Adjusts the contrast levels of Red, Green, and Blue. • **R Offset/G Offset/B Offset**: Adjusts the brightness levels of Red, Green, and Blue. To return all the settings to the factory default values, highlight **Reset Color Temperature Tuning**, and press **Reset**. • **Adv. Color Temperature Tuning** Used for fine-tuning **White Balance** from the bright part to the dark part of the video by different brightness levels. These levels are divided into 11 points according to each signal level (%). You can adjust the intensity of Red/Green/Blue in the range of 0~100 for the color temperature of selected point at different brightness level. Selecting **Reset** returns all settings in this menu to the factory preset values.

Advanced Color Settings (Continued)

• **Color Management**

The **Color Management** provides 8 sets (RGBCMYFW) of colors to be adjusted. When you select each color, you can independently adjust its range and saturation according to your preference.

To make adjustments, press the ▲/▼ arrows to highlight an independent color from among Red (R), Green (G), Blue (B), Cyan (C), Magenta (M), Yellow (Y), or Flesh Tone (F), and press **OK**. The following menu items are displayed for your choice.

- **Hue**: Increase in the range will include colors consisted of more proportions of its two adjacent colors. Please refer to the illustration for how the colors relate to each other.
  For example, if you select Red and set its range at 0, only pure red in the projected picture will be selected. Increasing its range will include red close to yellow and red close to magenta.

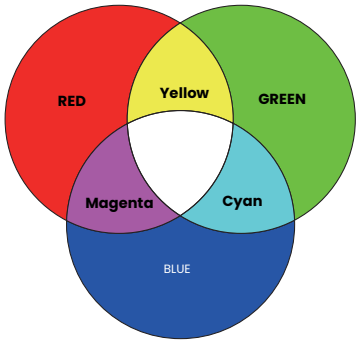

- **Saturation**: Adjusts the values to your preference. Every adjustment made will reflect to the image immediately. For example, if you select Red and set its value at 0, only the saturation of pure red will be affected.
- **Gain**: Adjusts the values to your preference. The contrast level of the primary color you select will be affected. Every adjustment made will reflect to the image immediately.

If you selected **White Balance** (W), you can adjust the contrast levels of Red, Green, and Blue by selecting **R Gain**, **G Gain**, and **B Gain**.

To return all the settings to the factory default values, highlight **Reset**, and press **OK**.

Saturation is the amount of that color in a video picture. Lower settings produce less saturated colors; a setting of “0” removes that color from the image entirely. If the saturation is too high, that color will be overpowering and unrealistic.

• **Wide Color Gamut**

Color Gamut refers to the range of colors that can potentially be displayed by a device. There are some standards to define difference levels of color gamuts for display devices, such as CIE 1976, sRGB, Adobe RGB, NTSC, etc. Selecting **On** enables the color filter module to extend its color gamut to DCI-P3.

This function is only selectable when **HDR10**, **FILMMAKER MODE (HDR)**, **HDR10+**, or **HLG** is selected. With this projector, selecting **On** will automatically apply the most suitable color gamut to the image source.

Advanced Color Settings (Continued)	• **CinemaMaster** • **Color Enhancer**: Allows you to fine-tune the saturation of colors with larger flexibility. It modulates complex color algorithms to flawlessly render saturated colors, fine gradients, intermediate hues and subtle pigments. • **Pixel Enhancer 4K**: It is a super-resolution technology which radically enhances Full HD content in terms of colors, contrast, and textures. It's also a Detail Enhancement Technology refining surface details for true-to-life images that pop off the screen. Users can adjust levels of sharpness and detail enhancement for optimal viewing. • **Motion Enhancer 4K**: Enhances picture smoothness by motion estimation/motion compensation. • **Global Contrast Enhancer**: Analyzes the entire frame of video content and enhances its contrast. • **Local Contrast Enhancer**: Divides video content into different "zones" and dims the dark parts of the screen without affecting the bright areas. This makes the contrast look great for watching movies, especially in a dark environment. • **Dynamic Tone Mapping**: Adjusts the tone mapping parameters dynamically based on the brightness standards of different scenes in the image, ensuring that the details and colors of HDR content are optimally displayed across various scenes. • **Light Source Mode** Selects a suitable light source power from among the provided modes. See Extending light source life on page 52. • **HDR Brightness** The projector can automatically adjust the brightness levels of your image according to the input source. You can also manually select a brightness level to display better picture quality. When the value is higher, the image becomes brighter; when the value is lower, the image becomes darker. • **Noise Reduction** Reduces electrical image noise caused by different media players.
Reset Current Picture Mode	Returns all of the adjustments you've made for the selected **Picture Mode** (including the preset mode, **User**) to the factory preset values. 1. Press **OK**. The confirmation message is displayed. 2. Use ◄/► to select **Reset** and press **OK**. The current picture mode returns to the factory preset settings. The following settings will still remain: **Picture Mode**, **Load Settings From**.

2. Main menu: **Audio**

Structure

Menu	Options
Sound Mode	**Cinema/Music/Game/Sports**
Audio Output	**Internal/S/PDIF/Audio Return+/3.5mm Jack**
Audio Output Format	**Auto/LPCM/RAW/RAW+**
Mute	**Off/On**
Volume	**0 – 20**
Reset Audio	**Reset/Cancel**

Function descriptions

Menu	Descriptions
Sound Mode	This function utilizes treVolo and Bongiovi DPS (Digital Power Station) Technology, which incorporates its patented algorithms with 120 calibration points that optimizes any audio signal in real time to add depth, clarity, definition, presence and enhanced stereo field imaging for more immersive audio experience. The following preset sounds are available: **Cinema**, **Music**, **Game**, and **Sports**.
Audio Output	Selects the audio output from internal or external speakers. To enjoy **S/PDIF** digital sound effect, make sure the **SPDIF** connector on the projector is connecting to a compatible audio system. To enjoy **Audio Return+** sound effect, make sure to turn on the eARC/ARC function from your soundbar as well. **Audio Return+** supports multi-audio outputs including 2.0, 5.1, 7.1 and Dolby Atmos to external audio system like soundbar.
Audio Output Format	The following audio formats are provided to achieve the audio performance you desire. • **LPCM** supports 2-channel audio output. • **RAW** supports 5.1/7.1-channel audio output. • **RAW+** supports Dolby Atmos audio output. • **Auto** selects a suitable output format for the audio system.
Mute	Select **On** to temporarily turn off the projector's internal speaker. To restore the audio, select **Off**.
Volume	Adjusts the volume level of the projector's internal speaker. If the **Mute** function is activated, adjusting **Volume** will turn off the **Mute** function.
Reset Audio	Returns all of the adjustments you've done under the **Audio** menu to the factory preset values.

3. Main menu: **Display**

Structure

Menu			Options
Aspect Ratio			**Auto/4:3/16:9/2.4:1**
Auto Source Search			**Off/On**
Source Rename			**HDMI-1/HDMI-2/HDMI-3**
3D	**3D Mode**		**Auto/Frame Sequential/Frame Packing/Top Bottom/Side by Side/Off**
	3D Sync Invert		**Disable/Invert**
HDMI Settings	**HDMI Format**		**Auto/Limited/Full**
	HDMI Equalizer	**HDMI-1/HDMI-2/HDMI-3/Android TV**	**Auto/1-32**
	HDMI EDID	**HDMI-1**	**Enhanced/Standard**
		HDMI-2	**Enhanced/Standard**
		HDMI-3	**Enhanced+/Enhanced/Standard**
		Android TV	**Enhanced/Standard**
	HDMI Device Control		**Off/On**
	Projector Power On by Device		**Off/On**
	Device Power Off by Projector		**Off/On**
24P True Cinema			**Off/On**
Reset Display			**Reset/Cancel**

Function descriptions

Menu	Descriptions
Aspect Ratio	There are several options to set the image's aspect ratio depending on your input signal source. This image adjustment might impact latency in **Fast Mode**. We suggest setting **Aspect Ratio** to **Auto** to enjoy low latency gaming. • **Auto** Scales an image proportionally to fit the projector's native resolution in its horizontal or vertical width. 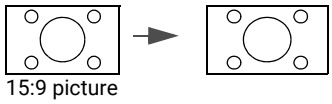 15:9 picture • **4:3** Scales an image so that it is displayed in the center of the screen with a 4:3 aspect ratio. 4:3 picture • **16:9** Scales an image so that it is displayed in the center of the screen with a 16:9 aspect ratio. 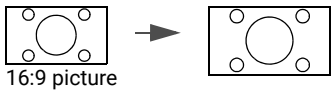 16:9 picture • **2.4:1** Scales an image so that it is displayed in the center of the screen with a 2.4:1 aspect ratio. 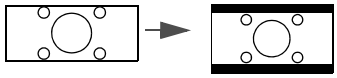 2.4:1 picture

Auto Source Search	Allows the projector to automatically search for a signal.
Source Rename	Renames the current input source to your desired name. On the **Source Rename** page: 1. Press **OK** to display the on-screen keyboard. 2. Press ▲/▼/◄/► to select each desired digit/letter, and press **OK** to confirm each input. 3. Repeat the step above and when done, highlight **Commit**. 4. Press **OK** and the source name changes.
3D	This projector supports playing three-dimensional (3D) content transferred through your 3D-compatible video devices and contents, such as PlayStation consoles (with 3D game discs), 3D Blu-ray players (with 3D Blu-ray discs), and so on. After you have connected the 3D video devices to the projector, wear the BenQ 3D glasses and make sure the power is on to view 3D contents. When watching 3D contents: • The image may seem misplaced; however, this is not a product malfunction. • Take appropriate breaks when watching 3D contents. • Stop watching 3D contents if you feel fatigue or discomfort. • Keep a distance from the screen of about three times the effective height of the screen. • Children and people with a history of oversensitivity to light, heart problems, or any other existing medical conditions should be refrained from watching 3D contents. • The image may seem reddish, greenish, or bluish without wearing 3D glasses. However, you will not notice any color bias when watching 3D contents with 3D glasses. • The 4K source will not be displayed. • **3D Mode** The default setting is **Auto** and the projector automatically chooses an appropriate 3D format when detecting 3D contents. If the projector cannot recognize the 3D format, you can choose **Frame Sequential**, **Frame Packing**, **Top Bottom**, or **Side by Side** for it. When this function is enabled: • The brightness level of the projected image decreases. • The **Picture Mode** cannot be adjusted. • The **2D Keystone** can only be adjusted within limited degrees. • **3D Sync Invert** When your 3D image is distorted, enable this function to switch between the image for the left eye and the right eye for more comfortable 3D viewing experience.

HDMI Settings	• **HDMI Format** Selects a suitable RGB color range to correct the color accuracy. • **Auto**: Automatically selects a suitable color range for the incoming HDMI signal. • **Limited**: Utilizes the Limited range RGB 16-235. • **Full**: Utilizes the Full range RGB 0-255. • **HDMI Equalizer** Sets a suitable value to maintain the HDMI picture quality in long distance data transmission. • **HDMI EDID** Switches between **Enhanced+** for HDMI 2.1 EDID (compatible with 4K 120Hz, default setting), **Enhanced** for HDMI 2.0 EDID and **Standard** for HDMI 1.4 EDID. Selecting **Standard** which supports up to 1080p 60Hz may solve abnormal display issues with some old players. • **HDMI Device Control** When you enable this function and connect an HDMI CEC-compatible device (e.g. an Android TV dongle, a soundbar) to your projector, the projector remote control/keypad can control the device's menu or volume during the projector power-on state. • **Projector Power On by Device/Device Power Off by Projector** When you connect an HDMI CEC-compatible device to your projector with an HDMI cable, you can set the behavior of powering on/off between the device and the projector. **Projector Power On by Device > On**: When the connected device is turned on, the projector will be activated, too. Changing this setting will make power consumption higher. **Device Power Off by Projector > On**: When the projector is turned off, the connected device will be shut down, too.
24P True Cinema	Most movies are shot at 24 frames per second (fps). In order to display movies exactly as the director intended, this function accepts high definition sources at 24 fps without judder in HDR mode to preserve the purity of the original image.
Reset Display	Returns all the settings in the **Display** main menu to the factory default values.

4. Main menu: **Installation**

Structure

Menu	Options
Projector Position	**Auto/Front/Front Ceiling/Rear/Rear Ceiling**
2D Keystone	**H: -30 – +30**
	V: -30 – +30
Corner Fit	**Top Left/Top Right/Bottom Left/Bottom Right**
Mask	**Top/Bottom/Left/Right/Reset**
Test Pattern	**Off/On**
High Altitude Mode	**Off/On**
12V Trigger	**Off/On**
Baud Rate	**9600/19200/38400/57600/115200**

Function descriptions

Menu	Descriptions
Projector Position	The projector can be installed on a ceiling or behind a screen, or with one or more mirrors. See Choosing a location on page 15 for details.
2D Keystone	See Correcting keystone on page 21 for details. This image adjustment might impact latency in **Fast Mode**. We suggest setting the **2D Keystone** values to 0 to enjoy low latency gaming.
Corner Fit	You can manually adjust the four corners of the image by setting the horizontal and vertical values. To adjust the corners of the image: 1. Display the correction page. 2. Press ▲/▼/◀/▶ to select one corner and press **OK**. 3. Press ▲/▼ to adjust vertical values. 4. Press ◀/▶ to adjust horizontal values. 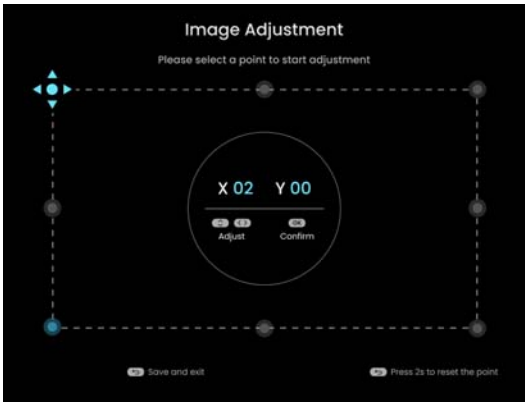
Mask	Masks the projected image with black stripes. Follow the on-screen instructions.
Test Pattern	Adjusts the image size and focus and check that the projected image is free from distortion. 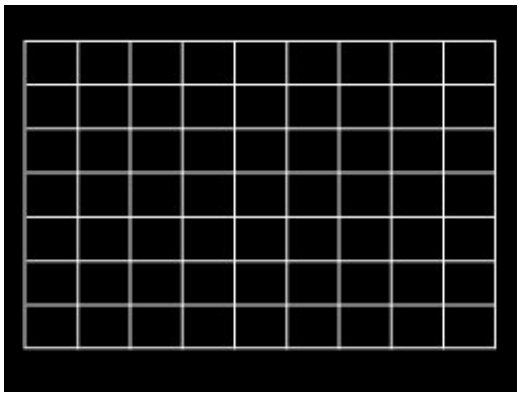

High Altitude Mode	We recommend you use the **High Altitude Mode** when your environment is between 1500 m–3000 m above sea level, and ambient temperature is between 0°C–30°C. Operation under "**High Altitude Mode**" may cause a higher decibel operating noise level because of increased fan speed necessary to improve overall system cooling and performance. If you use this projector under other extreme conditions excluding the above, it may display auto shut-down symptoms, which is designed to protect your projector from over-heating. In cases like this, you should switch to High Altitude mode to solve these symptoms. However, this is not to state that this projector can operate under any and all harsh or extreme conditions. Do not use the **High Altitude Mode** if your altitude is between 0 m and 1500 m and ambient temperature is between 0°C and 35°C. The projector will be over cooled, if you turn the mode on under such a condition.
12V Trigger	If **On** is selected, the projector will send electronic signal out when it is turned on.
Baud Rate	Selects a baud rate that is identical with your computer's so that you can connect the projector using a suitable RS-232 cable. This function is intended for qualified service personnel.

5. Main menu: **System**

Structure

Menu	Options		
Language			English / Français / Deutsch / Italiano / Español / Русский / 繁體中文 / 简体中文 / 日本語 / 한국어 / Svenska / Nederlands / Türkçe / Čeština / Português / ไทย / Polski / Magyar / Hrvatski / Română / Norsk / Dansk / Български / Suomi / Indonesian / Ελληνικά / العربية / हिन्दी
Background Settings	**Splash Screen**		**BenQ/Black/Blue**
Menu Settings	**Menu Type**		**Basic/Advanced**
	Menu Display Time		**5 sec/10 sec/20 sec/30 sec/Always**
	Menu Position		**Center/Top-Left/Top-Right/ Bottom-Right/Bottom-Left**
	ISF		**(Input password)**
Color Calibration	**Auto Color Calibration**		**Off/On**
Light Source Information	**Light Source Usage Time**		
	Normal Mode		
	ECO Mode		
	Dynamic Mode		
	Equivalent Light Hours		
	Refer to UM for detailed formula		
Operation Settings	**Reminder Message**		**Off/On**
	LED Indicator		**Off/On**
	Power On/Off Settings	**Direct Power On**	**Off/On**
		Auto Power Off	**Disable/3 min/10 min/15 min/ 20 min/25 min/30 min**
	BenQ HDMI Media Streaming (ATV)		**Off/On**
Firmware Upgrade			**Yes/No**
Factory Default			**Reset/Cancel**
Reset System			**Reset/Cancel**

Function descriptions

Menu	Descriptions
Language	Sets the language for the On-Screen Display (OSD) menus.
Background Settings	• **Splash Screen** Allows you to select which logo screen will be displayed during projector start-up.

Menu Settings	• **Menu Type** Sets the OSD menu type according to your needs. • **Menu Display Time** Sets the length of time the OSD will remain active after your last key press. • **Menu Position** Sets the On-Screen Display (OSD) menu position. • **ISF** The ISF calibration menu is password protected and only accessible by authorized ISF calibrators. The ISF (Imaging Science Foundation) has developed carefully crafted, industry-recognized standards for optimal video performance and has implemented a training program for technicians and installers to use these standards to obtain optimal picture quality from BenQ video display devices. Accordingly, we recommend that setup and calibration be performed by an ISF certified installation technician. For more information, go to www.imagingscience.com or contact the dealer or retailer from whom you purchased the projector.
Color Calibration	• **Auto Color Calibration** Automatically keeps out-of-box color consistency of the projector.
Light Source Information	This menu page displays the following information: • **Light Source Usage Time** • Light hours used under **Normal Mode**, **ECO Mode**, and **Dynamic Mode**. • **Equivalent Light Hours**. For details about how to calculate the hours, see Getting to know the light hour on page 51.
Operation Settings	• **Reminder Message** Sets the reminder messages on or off. • **LED Indicator** You can turn off the LED warning lights. This is to avoid any light disturbance when viewing images in a dark room. • **Power On/Off Settings** • **Direct Power On**: Allows the projector to turn on automatically once the power is fed through the power cord. • **Auto Power Off**: Allows the projector to turn off automatically if no input signal is detected after a set period of time to prevent unnecessary waste of light source life. Changing this setting will make power consumption higher. • **BenQ HDMI Media Streaming (ATV)** Enables or disables functions related to the Android TV dongle, including: • the reminder for plugging in the Android TV dongle. • the handshaking mechanism between the Android TV dongle and projector after power-on.

Factory Default	Returns all settings to the factory preset values. The following settings will still remain: **Projector Position**, **2D Keystone**, **Corner Fit**, **High Altitude Mode**, **12V Trigger**, **Baud Rate**, **Light Source Information**, **BenQ HDMI Media Streaming (ATV)**.
Reset System	Returns all the settings in the **System** main menu to the factory default values. The following settings will still remain: **Light Source Information**, **BenQ HDMI Media Streaming (ATV)**.

6. Main menu: **Information**

Structure

Menu	Options
Detected Resolution	
Source	
Picture Mode	
Light Source Mode	
3D Format	
Color System	
Dynamic Range	
Light Source Usage Time	
Firmware Version	
Service Code	

Function descriptions

Menu	Descriptions
Detected Resolution	Shows the timing of the input signal.
Source	Shows the current signal source.
Picture Mode	Shows the selected mode in the **Picture** menu.
Light Source Mode	Shows the used light source mode.
3D Format	Displays the current 3D mode. **3D Format** is only available when 3D is enabled.
Color System	Shows the input system format.
Dynamic Range	Shows the picture dynamic range, e.g. HDR10, HLG, etc.
Light Source Usage Time	Shows the number of hours the light has been used.
Firmware Version	Shows the firmware version of your projector.
Service Code	Shows the projector's serial number.

Maintenance

Care of the projector

Cleaning the lens

Clean the lens whenever you notice dirt or dust on the surface. Please be sure to turn off the projector and let it cool down completely before cleaning the lens.

- Use a canister of compressed air to remove dust.
- If there is dirt or smears, use lens-cleaning paper or moisten a soft cloth with lens cleaner and gently wipe the lens surface.
- Never use any type of abrasive pad, alkaline/acid cleaner, scouring powder, or volatile solvent, such as alcohol, benzene, thinner or insecticide. Using such materials or maintaining prolonged contact with rubber or vinyl materials may result in damage to the projector surface and cabinet material.

Please note that it is normal to have some dust on the lens surface. If it needs lens clean, please never remove any parts of the projector.

Contact your dealer or local customer service center if the projector fails to operate as expected.

Cleaning the projector case

Before you clean the case, turn the projector off using the proper shutdown procedure as described in Shutting down the projector on page 31 and unplug the power cord.

- To remove dirt or dust, wipe the case with a soft, lint-free cloth.
- To remove stubborn dirt or stains, moisten a soft cloth with water and a neutral pH detergent. Then wipe the case.

Never use wax, alcohol, benzene, thinner or other chemical detergents. These can damage the case.

Storing the projector

If you need to store the projector for an extended time, please follow the instructions below:

- Make sure the temperature and humidity of the storage area are within the recommended range for the projector. Please refer to Specifications on page 55 or consult your dealer about the range.
- Retract the adjuster feet.
- Remove the battery from the remote control.
- Pack the projector in its original packing or equivalent.

Transporting the projector

It is recommended that you ship the projector with its original packing or equivalent.

Light source information

Getting to know the light hour

When the projector is in operation, the duration (in hours) of light source usage is automatically calculated by the built-in timer. The method of calculating the equivalent light hour is as follows:

1. Light Usage Time = (x+y+z+a) hours, if
   Time used in **Normal** mode = x hours
   Time used in **ECO** mode = y hours
   Time used in **Low Dynamic** mode = z hours
   Time used in **High Dynamic** mode = a hours
2. Equivalent Light Hour = α hours

$$\alpha = \frac{A'}{X} \times \chi + \frac{A'}{Y} \times y + \frac{A'}{Z} \times z + \frac{A'}{A} \times a$$, if

X= light source life spec of **Normal** mode
Y= light source life spec of **ECO** mode
Z= light source life spec of **Low Dynamic** mode
A= light source life spec of **High Dynamic** mode

A' is the longest light life spec among X, Y, Z, A.

For time used in each light source mode shown in OSD menu:
- Time used is accumulated and rounded down to an integer in **hours**.
- When time used is less than 1 hour, it shows 0 hours.

When you calculate **Equivalent Light Hours** manually, it will probably have deviation from the value shown in OSD menu since projector system calculates time used for each light source mode in "Minutes" then rounds down to an integer in hours shown in OSD.

To obtain the light source information:

Go to the **Advanced** menu - **System** > **Light Source Information** and press **OK**. The **Light Source Information** page appears.

You can also get the light hour information on the **Information** menu.

Extending light source life

Setting the **Light Source Mode**

Go to the **Advanced Menu - Picture** > **Advanced Color Settings** > **Light Source Mode** and press ◄/► to select a suitable light source power from among the provided modes.

Setting the projector in **ECO**, **Low Dynamic**, or **High Dynamic** mode extends light life.

Light Source Mode	Descriptions
Normal	Provides full light brightness.
ECO	Lowers brightness to extend the light life and decreases the fan noise.
Low Dynamic	Automatically changes the black level of the projected pictures to enhance the effect of the contrast ratio. When set to this mode, the change in the black level will proceed smoothly, but will result in less obvious brightness changes for quick transitions between bright and dark scenes.
High Dynamic	Automatically changes the black level of the projected pictures to enhance the effect of the contrast ratio. When set to this mode, the change in the black level will be quick, so that the transition between bright and dark scenes will be obvious. For some scenes, this sudden change in brightness may create a flashing effect that may lead to an uncomfortable viewing experience.

Setting **Auto Power Off**

This function allows the projector to turn off automatically if no input signal is detected after a set period of time to prevent unnecessary waste of light source life.

To set **Auto Power Off**, go to the **Advanced** menu **- System** > **Operation Settings** > **Power On/Off Settings** > **Auto Power Off**, and press **OK**, ◄/► to set a period of time.

- The light source (LED) can last around 20,000-30,000 hours and no need to be changed during the lifetime of the projector mostly. When it is needed, LED replacement is not user-serviceable. Please contact the service center for assistance.
- Changing this setting will make power consumption higher.

Indicators

Indicator			Status & Description
○ POWER	○ TEMP	○ LIGHT	
Power events			
🟠	○	○	Stand-by mode
🟢 (flashing)	○	○	Powering up
🟢	○	○	Normal operation
🟠 (flashing)	○	○	Normal power-down cooling
🔴 (flashing)	🔴 (flashing)	🔴 (flashing)	Download
🟠	○	🟢 (flashing)	Light source life exhausted
🟢	○	○	Burn-in ON
🟢	🟢	🟢	Burn-in OFF
Light source events			
○	○	🔴	Light source error in normal operation
Thermal events			
🔴	🔴	○	Fan 1 error (the actual fan speed is outside the desired speed)
🔴	🔴 (flashing)	○	Fan 2 error (the actual fan speed is outside the desired speed)
🔴	🟢	○	Fan 3 error (the actual fan speed is outside the desired speed)
🟢	🔴	○	Temperature 1 error (over limited temperature)
🟢	🔴 (flashing)	○	Thermal Sensor 1 open error
🟢	🟢	○	Thermal Sensor 1 short error
🟢	🟢 (flashing)	○	Thermal IC #1 I2C Connection error

○: **Off**

🟠: Orange On 🟢: Green On 🔴: Red On

🟠 (flashing): Orange Flashing 🟢 (flashing): Green Flashing 🔴 (flashing): Red Flashing

Troubleshooting

The projector does not turn on.

Cause	Remedy
There is no power from the power cord.	Plug the power cord into the AC power jack on the projector, and plug the power cord into the power outlet. If the power outlet has a switch, make sure that it is switched on.
Attempting to turn the projector on again during the cooling process.	Wait until the cooling down process has completed.

No picture

Cause	Remedy
The video source is not turned on or connected correctly.	Turn the video source on and check that the signal cable is connected correctly.
The projector is not correctly connected to the input signal device.	Check the connection.
The input signal has not been correctly selected.	Select the correct input signal with the (**SOURCE**) key.

Blurred image

Cause	Remedy
The projection lens is not correctly focused.	Adjust the focus of the lens using the focus ring.
The projector and the screen are not aligned properly.	Adjust the projection angle and direction as well as the height of the projector if necessary.

Remote control does not work.

Cause	Remedy
The batteries are out of power.	Replace both of the batteries with new ones.
There is an obstacle between the remote control and the projector.	Remove the obstacle.
You are too far away from the projector.	Stand within 8 meters (26 feet) of the projector.

Specifications

Projector specifications

All specifications are subject to change without notice.

Optical

Resolution
3840 x 2160

Display system
1-CHIP DMD

Lens
F = 1.8 to 2.25, f = 17.02 to 22.21 mm

Clear focus range
1.52 – 5.09 m @ Wide,
1.99 – 6.64 m @ Tele

Light source
4LED

Electrical

Power supply
AC100–240V, 4.3 A, 50–60 Hz (Automatic)

Power consumption
380 W (Max); < 0.5 W (Standby)

Mechanical

Weight
6.1 Kg ± 100 g (13.45 ± 0.22 lbs)

Output terminals

Speaker
5 watt x 1

Audio signal output
3.5 mm audio jack x 1
SPDIF x 1
HDMI-2 Audio Return+

Input terminals

Digital
(External)
- HDMI-1 (2.1, HDCP 2.3)
- HDMI-2 (2.1, HDCP 2.3, CEC/ARC/Audio Return+ with multichannel audio output)
- HDMI-3 (2.1, HDCP 2.3)

(Internal)
- Mini HDMI Male cable (2.0b, HDCP 2.2)

Control

12V DC x 1 (0.5 A power supply)

RS-232 serial control
9 pin x 1

IR receiver x 2

USB
(External)
- USB 2.0 (5V 1.5A): USB reader/drive
- USB 2.0 (5V 2.5A): USB charging only under projector power on status
- USB Mini B: TI FW update only

(Internal)
- USB Micro B cable: for an Android TV dongle (Power supply, 5V/1.5A)

Environmental Requirements

Operating temperature
0°C–40°C at sea level (Normal mode > 35°C @ Eco light source power)

Storage temperature
-20°C–60°C at sea level

Operating/Storage relative humidity
10%–90% (without condensation)

Operating altitude
0–1499 m at 0°C–35°C (Normal mode > 35°C @ Eco light source power)
1500–3000 m at 0°C–30°C (Normal mode > 35°C @ Eco light source power)(with High Altitude Mode on)

Storage altitude
30°C @ 0–12,200 m above sea level

Repairing

Please visit below website and choose your country to find your service contact window.
http://www.benq.com/welcome

Transporting

Original packing or equivalent is recommended.

Dimensions

420.5 mm (W) x 312.1 mm (D) x 135.3 mm (H)

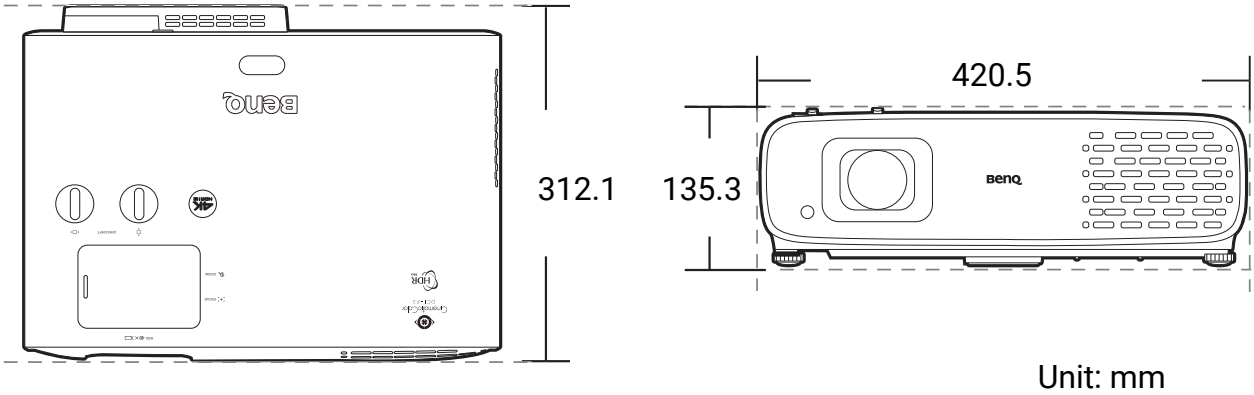

Timing chart

Supported timing for HDMI (HDCP) input

• PC timings

Resolution	Mode	Refresh rate (Hz)	H-frequency (kHz)	Clock (MHz)	Supported 3D format		
					Frame Sequential	Top Bottom	Side by Side
640 x 480	VGA_60	59.940	31.469	25.175		V	V
	VGA_72	72.809	37.861	31.500			
	VGA_75	75.000	37.500	31.500			
	VGA_85	85.008	43.269	36.000			
720 x 400	720 x 400_70	70.087	31.469	28.3221			
800 x 600	SVGA_60	60.317	37.879	40.000		V	V
	SVGA_72	72.188	48.077	50.000			
	SVGA_75	75.000	46.875	49.500			
	SVGA_85	85.061	53.674	56.250			
	SVGA_120 (Reduce Blanking)	119.854	77.425	83.000			
1024 x 768	XGA_60	60.004	48.363	65.000		V	V
	XGA_70	70.069	56.476	75.000			
	XGA_75	75.029	60.023	78.750			
	XGA_85	84.997	68.667	94.500			
	XGA_120 (Reduce Blanking)	119.989	97.551	115.500			
1152 x 864	1152 x 864_75	75.00	67.500	108.000			
1024 x 576	BenQ Notebook Timing	60.00	35.820	46.996			
1024 x 600	BenQ Notebook Timing	64.995	41.467	51.419			
1280 x 720	1280 x 720_60	60	45.000	74.250		▲	▲
1280 x 768	1280 x 768_60	59.870	47.776	79.5		V	V
1280 x 800	WXGA_60	59.810	49.702	83.500		V	V
	WXGA_75	74.934	62.795	106.500			
	WXGA_85	84.880	71.554	122.500			
	WXGA_120 (Reduce Blanking)	119.909	101.563	146.25			
1280 x 1024	SXGA_60	60.020	63.981	108.000		V	V
	SXGA_75	75.025	79.976	135.000			
	SXGA_85	85.024	91.146	157.500			
1280 x 960	1280 x 960_60	60.000	60.000	108		V	V
	1280 x 960_85	85.002	85.938	148.500			
1360 x 768	1360 x 768_60	60.015	47.712	85.500		V	V
1440 x 900	WXGA+_60	59.887	55.935	106.500		V	V
1400 x 1050	SXGA+_60	59.978	65.317	121.750		V	V
1600 x 1200	UXGA	60.000	75.000	162.000		V	
1680 x 1050	1680 x 1050_60	59.954	65.290	146.250		V	V
640 x 480@67Hz	MAC13	66.667	35.000	30.240			
832 x 624@75Hz	MAC16	74.546	49.722	57.280			
1024 x 768@75Hz	MAC19	75.020	60.241	80.000			
1152 x 870@75Hz	MAC21	75.06	68.68	100.00			

1920 x 1080@60Hz	1920 x 1080_60 (CEA-861)	60	67.5	148.5	V	▲	▲
1920 x 1200@60Hz	1920 x 1200_60 (Reduce Blanking)	59.95	74.038	154			
1920 x 1080@120Hz	1920 x 1080_120	120.000	135.000	297			
1920 x 1200@120Hz	1920 x 1200_120 (Reduce Blanking)	119.909	152.404	317.00			
1920 x 1080@240Hz	1920 x 1080_240	240.000	270.000	594			
3840 x 2160	3840 x 2160_30 For 4K2K model	30	67.5	297			
3840 x 2160	3840 x 2160_60 For 4K2K model	60	135	594			
*3840 x 2160	3840 x 2160_120 For 4K2K model	120	270	1188			

- ▲: Supports auto-detecting and manually setting 3D format.
- V: Supports manually setting 3D format.
- The timings showing above may not be supported due to EDID file and VGA graphics card limitations. It is possible that some timings cannot be chosen.
- *Only the HDMI 3 input port supports the timing of 3840 x 2160 at 120Hz, and the output will be downgraded to 1920 x 1080 at 120Hz.

- Video timings

Timing	Resolution	Horizontal frequency (KHz)	Vertical frequency (Hz)	Dot Clock Frequency (MHz)	Supported 3D format			
					Frame Sequential	Frame Packing	Top Bottom	Side by Side
480i	720 (1440) x 480	15.73	59.94	27	V			
480p	720 x 480	31.47	59.94	27	V			
576i	720 (1440) x 576	15.63	50	27				
576p	720 x 576	31.25	50	27				
720/50p	1280 x 720	37.5	50	74.25		▲	▲	▲
720/60p	1280 x 720	45.00	60	74.25	V	▲	▲	▲
1080/24P	1920 x 1080	27	24	74.25		▲	▲	▲
1080/25P	1920 x 1080	28.13	25	74.25				
1080/30P	1920 x 1080	33.75	30	74.25				
1080/50i	1920 x 1080	28.13	50	74.25				▲
1080/60i	1920 x 1080	33.75	60	74.25				▲
1080/50P	1920 x 1080	56.25	50	148.5			▲	▲
1080/60P	1920 x 1080	67.5	60	148.5	V		▲	▲
1080/120p	1920 x 1080	135	120	297				
1080/240P	1920 x 1080	270	240	594				
2160/24P	3840 x 2160	54	24	297				
2160/25P	3840 x 2160	56.25	25	297				
2160/30P	3840 x 2160	67.5	30	297				
2160/50P	3840 x 2160	112.5	50	594				
2160/60P	3840 x 2160	135	60	594				
*2160/120p	4096 x 2160	270	120	1188				

- ▲: Supports auto-detecting and manually setting 3D format.
- V: Supports manually setting 3D format.
- The timings showing above may not be supported due to EDID file and VGA graphics card limitations. It is possible that some timings cannot be chosen.
- *Only the HDMI 3 input port supports the timing of 2160/120p, and the output will be downgraded to 1080p/120Hz.

• Supported detail timings for sampling and color depth

Display format (refresh rate)	Chroma subsampling	8 Bit	10 Bit	12 Bit
4K/60p (60 Hz)	4:4:4	v	v	v
	4:2:2	v	v	v
	4:2:0	v	v	v
4K/50p (50 Hz)	4:4:4	v	v	v
	4:2:2	v	v	v
	4:2:0	v	v	v
4K/30p (30 Hz)	4:4:4	v	v	v
	4:2:2	v	v	v
	4:2:0	v	v	v
4K/24p (24 Hz)	4:4:4	v	v	v
	4:2:2	v	v	v
	4:2:0	v	v	v
1080P/60P (60 Hz)	4:4:4	v	v	v
	4:2:2	v	v	v
	4:2:0			
1080P/50P (50 Hz)	4:4:4	v	v	v
	4:2:2	v	v	v
	4:2:0			
1080P/30P (30 Hz)	4:4:4	v	v	v
	4:2:2	v	v	v
	4:2:0			
1080P/24P (24 Hz)	4:4:4	v	v	v
	4:2:2	v	v	v
	4:2:0			

RS232 command

RS232 pin assignment

No.	Serial
1	NC
2	RX
3	TX
4	NC
5	GND

No.	Serial
6	NC
7	RTSZ
8	CTSZ
9	NC

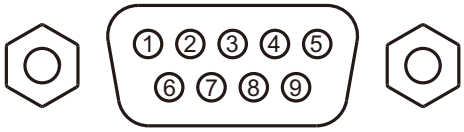

Function	Type	Operation	ASCII
Power	Write	Power On	<CR>*pow=on#<CR>
	Write	Power Off	<CR>*pow=off#<CR>
	Read	Power Status	<CR>*pow=?#<CR>
Source Selection	Write	HDMI(MHL)	<CR>*sour=hdmi#<CR>
	Write	HDMI 2(MHL2)	<CR>*sour=hdmi2#<CR>
	Write	HDMI 3	<CR>*sour=hdmi3#<CR>
	Write	HDMI 4	<CR>*sour=hdmi4#<CR>
	Write	USB Reader	<CR>*sour=usbreader#<CR>
	Read	Current source	<CR>*sour=?#<CR>
Audio Control	Write	Mute On	<CR>*mute=on#<CR>
	Write	Mute Off	<CR>*mute=off#<CR>
	Read	Mute Status	<CR>*mute=?#<CR>
	Write	Volume +	<CR>*vol=+#<CR>
	Write	Volume -	<CR>*vol=-#<CR>
	Write	Volume level for customer	<CR>*vol=value#<CR>
	Read	Volume Status	<CR>*vol=?#<CR>
Picture Mode	Write	AI Cinema	<CR>*appmod=aicine#<CR>
	Write	HDR AI Cinema	<CR>*appmod=hdraicine#<CR>
	Write	Bright	<CR>*appmod=bright#<CR>
	Write	Bright Cinema	<CR>*appmod=brightcine#<CR>
	Write	FILMMAKER MODE	<CR>*appmod=filmmaker#<CR>
	Write	FILMMAKER HDR MODE	<CR>*appmod=filmmakerhdr#<CR>
	Write	User1	<CR>*appmod=user1#<CR>
	Write	ISF Day	<CR>*appmod=isfday#<CR>
	Write	ISF Night	<CR>*appmod=isfnight#<CR>
	Write	3D	<CR>*appmod=threed#<CR>
	Write	HDR10	<CR>*appmod=hdr10#<CR>
	Write	HLG	<CR>*appmod=hlg#<CR>
	Read	Picture Mode	<CR>*appmod=?#<CR>
Picture Settings	Write	Contrast +	<CR>*con=+#<CR>
	Write	Contrast -	<CR>*con=-#<CR>
	Write	Set Contrast value	<CR>*con=value#<CR>
	Read	Contrast value	<CR>*con=?#<CR>
	Write	Brightness +	<CR>*bri=+#<CR>
	Write	Brightness -	<CR>*bri=-#<CR>
	Write	Set Brightness value	<CR>*bri=value#<CR>
	Read	Brightness value	<CR>*bri=?#<CR>
	Write	Color +	<CR>*color=+#<CR>
	Write	Color -	<CR>*color=-#<CR>

Picture Settings	Write	Set Color value	<CR>*color=value#<CR>
	Read	Color value	<CR>*color=?#<CR>
	Write	Sharpness +	<CR>*sharp=+#<CR>
	Write	Sharpness -	<CR>*sharp=-#<CR>
	Write	Set Sharpness value	<CR>*sharp=value#<CR>
	Read	Sharpness value	<CR>*sharp=?#<CR>
	Write	Color Temperature-Warm	<CR>*ct=warm#<CR>
	Write	Color Temperature-Normal	<CR>*ct=normal#<CR>
	Write	Color Temperature-Cool	<CR>*ct=cool#<CR>
	Write	Color Temperature-lamp native	<CR>*ct=native#<CR>
	Read	Color Temperature Status	<CR>*ct=?#<CR>
	Write	Aspect 4:3	<CR>*asp=4:3#<CR>
	Write	Aspect 16:9	<CR>*asp=16:9#<CR>
	Write	Aspect Auto	<CR>*asp=AUTO#<CR>
	Read	Aspect Status	<CR>*asp=?#<CR>
	Write	Vertical Keystone +	<CR>*vkeystone=+#<CR>
	Write	Vertical Keystone -	<CR>*vkeystone=-#<CR>
	Write	Vertical Keystone value Set	<CR>*vkeystone=value#<CR>
	Read	Vertical Keystone value	<CR>*vkeystone=?#<CR>
	Write	Horizontal Keystone +	<CR>*hkeystone=+#<CR>
	Write	Horizontal Keystone -	<CR>*hkeystone=-#<CR>
	Write	Horizontal Keystone value Set	<CR>*hkeystone=value#<CR>
	Read	Horizontal Keystone value	<CR>*hkeystone=?#<CR>
	Write	Noise Reduction	<CR>*noiserdt=value#<CR>
	Read	Noise Reduction status	<CR>*noiserdt=?#<CR>
	Write	Reset current picture settings	<CR>*rstcurpicsetting#<CR>
Operation Settings	Write	Projector Position-Front Table	<CR>*pp=FT#<CR>
	Write	Projector Position-Rear Table	<CR>*pp=RE#<CR>
	Write	Projector Position-Rear Ceiling	<CR>*pp=RC#<CR>
	Write	Projector Position-Front Ceiling	<CR>*pp=FC#<CR>
	Read	Projector Position Status	<CR>*pp=?#<CR>
	Write	Menu Position - Center	<CR>*menuposition=center#<CR>
	Write	Menu Position - Top-Left	<CR>*menuposition=tl#<CR>
	Write	Menu Position - Top-Right	<CR>*menuposition=tr#<CR>
	Write	Menu Position - Bottom-Right	<CR>*menuposition=br#<CR>
	Write	Menu Position - Bottom-Left	<CR>*menuposition=bl#<CR>
	Read	Menu Position Status	<CR>*menuposition=?#<CR>
	Write	Direct Power On-on	<CR>*directpower=on#<CR>
	Write	Direct Power On-off	<CR>*directpower=off#<CR>
	Read	Direct Power On-Status	<CR>*directpower=?#<CR>

Baud Rate	Write	9600	<CR>*baud=9600#<CR>
	Write	19200	<CR>*baud=19200#<CR>
	Write	38400	<CR>*baud=38400#<CR>
	Write	57600	<CR>*baud=57600#<CR>
	Write	115200	<CR>*baud=115200#<CR>
	Read	Current Baud Rate	<CR>*baud=?#<CR>
Lamp Control	Read	Lamp	<CR>*ltim=?#<CR>
	Write	Normal mode	<CR>*lampm=lnor#<CR>
	Write	Eco mode	<CR>*lampm=eco#<CR>
	Write	SmartEco mode	<CR>*lampm=seco#<CR>
	Read	Lamp Mode Status	<CR>*lampm=?#<CR>
Miscellaneous	Read	Model Name	<CR>*modelname=?#<CR>
	Read	Scaler F/W Version	<CR>*scalerfwversion=?#<CR>
	Write	Blank On	<CR>*blank=on#<CR>
	Write	Blank Off	<CR>*blank=off#<CR>
	Read	Blank Status	<CR>*blank=?#<CR>
	Write	Menu On	<CR>*menu=on#<CR>
	Write	Menu Off	<CR>*menu=off#<CR>
	Read	Menu Status	<CR>*menu=?#<CR>
	Write	Up	<CR>*up#<CR>
	Write	Down	<CR>*down#<CR>
	Write	Right	<CR>*right#<CR>
	Write	Left	<CR>*left#<CR>
	Write	Enter	<CR>*enter#<CR>
	Write	Back	<CR>*back#<CR>
	Write	Source Menu On	<CR>*sourmenu=on#<CR>
	Write	Source Menu Off	<CR>*sourmenu=off#<CR>
	Read	Source Menu Status	<CR>*sourmenu=?#<CR>
	Write	3D Sync Off	<CR>*3d=off#<CR>
	Write	3D Auto	<CR>*3d=auto#<CR>
	Write	3D Sync Top Bottom	<CR>*3d=tb#<CR>
	Write	3D Sync Frame Sequential	<CR>*3d=fs#<CR>
	Write	3D Frame packing	<CR>*3d=fp#<CR>
	Write	3D Side by side	<CR>*3d=sbs#<CR>
	Write	3D inverter disable	<CR>*3d=da#<CR>
	Write	3D inverter	<CR>*3d=iv#<CR>
	Read	3D Sync Status	<CR>*3d=?#<CR>
	Read	Serial Number	<CR>*serialnumber=?#<CR>
	Write	High Altitude mode on	<CR>*highaltitude=on#<CR>
	Write	High Altitude mode off	<CR>*highaltitude=off#<CR>
	Read	High Altitude mode status	<CR>*highaltitude=?#<CR>