WORX®

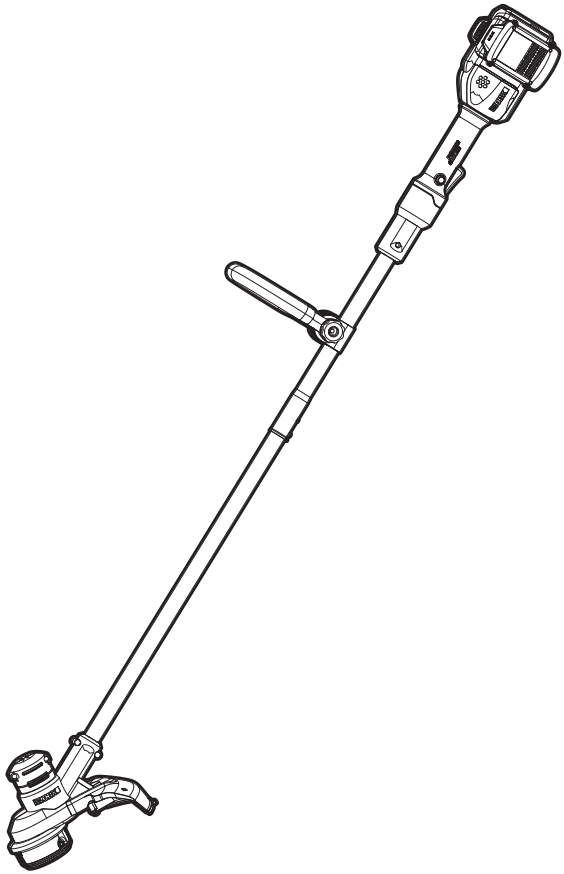

Cordless Grass Trimmer

EN	P02
F	P15
ES	P24

HELPLINE NUMBER
NUMÉRO DU SERVICE D'ASSISTANCE
NÚMERO DE LÍNEA DE AYUDA
1-866-354-WORX (9679)

WG183 WG183.9

PRODUCT SAFETY

WARNING: This product can expose you to chemicals including lead and Di (2-ethylhexyl) phthalate (DEHP) which are known to the State of California to cause cancer and birth defects or other reproductive harm. For more information go to www.P65Warnings.ca.gov.

IMPORTANT SAFETY INSTRUCTIONS

WARNING: Read all safety warnings and instructions. Failure to follow the warnings and instructions may result in electric shock, fire and/or serious injury.
WARNING: Read all instructions

FOR ALL APPLIANCES

1) Avoid Dangerous Environment - Don't use appliances in damp or wet locations.
2) Don't Use In Rain.
3) Keep Children Away - All visitors should be kept at a distance from work area.
4) Dress Properly - Do not wear loose clothing or jewelry. They can be caught in moving parts. Use of rubber gloves and substantial footwear is recommended when working outdoors. Wear protective hair covering to contain long hair.
5) Use Safety Glasses - Always use face or dust mask if operation is dusty.
6) Use Right Appliance - Do not use appliance for any job except that for which it is intended.
7) Don't Force Appliance - It will do the job better and with less likelihood of a risk of injury at the rate for which it was designed.
8) Don't Overreach - Keep proper footing and balance at all times.
9) Stay Alert - Watch what you are doing. Use common sense. Do not operate appliance when you are tired.
10) Store Idle Appliances Indoors - When not in use, appliances should be stored indoors in dry, and high or locked-up place - out of reach of children.
11) Maintain Appliance With Care - Keep cutting edge sharp and clean for best performance and to reduce the risk of injury. Follow instructions for lubricating and changing accessories. Keep handles dry, clean, and free from oil and grease.
12) Check Damaged Parts - Before further use of the appliance, a guard or other part that is damaged should be carefully checked to determine that it will operate properly and perform its intended function. Check for alignment of moving parts, binding of moving parts, breakage of parts, mounting, and any other condition that may affect its operation. A guard or other part that is damaged should be properly repaired or replaced by an authorized service center unless indicated elsewhere in this manual.

FOR ALL BATTERY – OPERATED GARDENING

1. Prevent unintentional starting. Ensure the switch is in the off-position before connecting to battery pack, picking up or carrying the appliance. Carrying the appliance with your finger on the switch or energizing appliance that have the switch on invites accidents.
2. Disconnect the battery pack from the appliance before making any adjustments, changing accessories, or storing appliance. Such preventive safety measures reduce the risk of starting the appliance accidentally.
3. Recharge only with the charger specified by the manufacturer .A charger that is suitable for one type of battery pack may create a risk of fire when used with another battery pack.
4. Use appliances only with specifically designated battery packs. Use of any other battery packs may create a risk of injury and fire.
5. When battery pack is not in use, keep it away from other metal objects, like paper clips, coins, keys, nails, screws or other small metal objects, that can make a connection from one terminal to another. Shorting the battery terminals together may cause burns or a fire.
6. Under abusive conditions, liquid may be ejected from the battery; avoid contact. If contact accidentally occurs, flush with water. If liquid contacts eyes, additionally seek medical help. Liquid ejected from the battery may cause irritation or burns.
7. Do not use a battery pack or appliance that is damaged or modified. Damaged or modified batteries may exhibit unpredictable behavior resulting in fire, explosion or risk of injury.
8. Do not expose a battery pack or appliance to fire or excessive temperature. Exposure to fire or temperature above 130°C may cause explosion.
9. Follow all charging instructions and do not charge the battery pack or appliance outside of the temperature range specified in the instructions. Charging improperly or at temperatures outside of the specified range may damage the battery and increase the risk of fire.
10. Have servicing performed by a qualified repair person using only identical replacement parts. This will ensure that the safety of the product is maintained.
11. Do not modify or attempt to repair the appliance or the battery pack (as applicable) except as indicated in the instructions for use and care.

ADDITIONAL SAFETY RULES FOR LAWN TRIMMER AND EDGE TRIMMER

1. Keep guards in place and in good working order.
2. Keep hands and feet away from cutting area.
3. Do not use heavier lines than recommended in this manual.
4. Do not use line materials of other types – for example, metal wire, rope, and the like.

SAFETY WARNINGS FOR BATTERY PACK

a) Do not dismantle, open or shred battery pack.
b) Do not expose battery pack to heat or fire. Avoid storage in direct sunlight.
c) Do not short-circuit a battery pack. Do not store battery packs haphazardly in a box or drawer where they may short-circuit each other or be short-circuited by other metal objects. When battery pack is not in use, keep it away from other metal objects, like paper clips, coins, keys, nails, screws or other small metal objects, that can make a connection from one terminal to another. Shorting the battery terminals together may cause burns or fire.
d) Do not remove battery pack from its original packaging until required for use.
e) Do not subject battery pack to mechanical shock.
f) In the event of battery leaking, do not allow the liquid to come in contact with the skin or eyes. If contact has been made, wash the affected area

with copious amounts of water and seek medical advice.

g) Observe the plus (+) and minus (–) marks on the battery back and equipment and ensure correct use.

h) Do not use any battery pack which is not designed for use with the equipment.

i) Keep battery pack out of the reach of children.

j) Seek medical advice immediately if a cell or battery has been swallowed.

k) Always purchase the battery pack recommended by the device manufacturer for the equipment.

l) Keep battery pack clean and dry.

m) Wipe the battery pack terminals with a clean dry cloth if they become dirty.

n) Battery pack need to be charged before use. Always use the correct charger and refer to the manufacturer's instructions or equipment manual for proper charging instructions.

o) Do not leave battery pack on prolonged charge when not in use.

p) After extended periods of storage, it may be necessary to charge and discharge the battery pack several times to obtain maximum performance.

q) Battery pack gives its best performance when it is operated at normal room temperature (20 °C ± 5 °C).

r) When disposing of battery packs, keep battery packs of different electrochemical systems separate from each other.

s) Recharge only with the charger specified by Worx. Do not use any charger other than that specifically provided for use with the equipment. A charger that is suitable for one type of battery pack may create a risk of fire when used with another battery pack.

t) Retain the original product literature for future reference.

u) Use only the battery pack in the application for which it was intended.

v) Remove the battery pack from the equipment when not in use.

w) Dispose of properly.

SAVE THESE INSTRUCTIONS

SYMBOLS

	To reduce the risk of injury, user must read instruction manual
	Wear ear protection
	This part directs thrown objects away from the operator
 Li-Ion	Li-Ion battery, battery must be recycled
	Wear protective gloves
	Make sure the battery is removed prior to changing accessories.
	Trimming
	Lock
	Unlock
	Correct
	Incorrect
	Do not burn
	Batteries may enter water cycle if disposed improperly, which can be hazardous for ecosystem. Do not dispose of waste batteries as unsorted municipal waste.
	call2recycle® POSITEC Inc. has established a partnership with the RBRC Corporation to recycle any Positec batteries with the RBRC-call2recycle seal. For environmental protection, please do not discard batteries in the trash. After the batteries' life cycle is ended, then please call 1-800-822-8837 for a free service that will properly dispose of the battery.

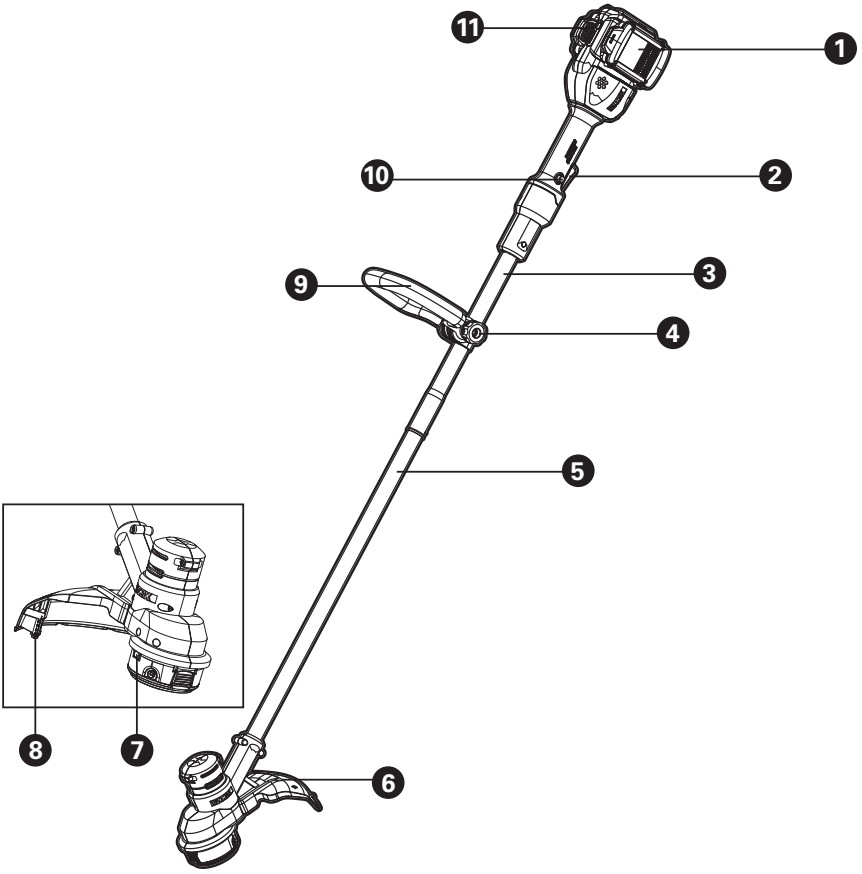
11
1
10
2
9
3
4
5
8
7
6

COMPONENT LIST

1.	BATTERY PACK *
2.	ON/OFF SWITCH
3.	UPPER SHAFT
4.	HANDLE ADJUSTMENT KNOB
5.	LOWER SHAFT
6.	SAFETY GUARD
7.	LINE FEED BUTTON
8.	LINE CUTTER
9.	AUXILIARY HANDLE
10.	LOCK OFF SWITCH
11.	BATTERY INDICATOR LIGHT
12.	CUTTING HEAD (SEE FIG.I)
13.	SPOOL CAP (SEE FIG. J)
14.	CAP RELEASE LATCH (SEE FIG.J)
15.	SPOOL (SEE FIG.J)
16.	EYELET (SEE FIG.J)

*** Not all the accessories illustrated ordescribed are included in standard delivery.**

TECHNICAL DATA

	WG183	WG183.9
Voltage	40 V ⎓ MAX(2x20V MAX) **	
No Load Speed	6800 /min	
Cutting Diameter	13"	
Line Diameter	0.065"	
Line length	16 ft (Dual-Exit)	
Battery type	Lithium-ion	/
Battery Model	WA3525 (2.0 Ah)	/
Charger Model	WA3770	/
Charger rating	Input: 120 V~60 Hz, 100 W Output 1: 20 V ⎓, 2.0 A ** Output 2: 20 V ⎓, 2.0 A **	/
Charging time (approx.) Battery pack: 2.0Ah (1pc) 2.0Ah (2pcs)	 65mins 130mins	/
Machine Weight	6.4 lbs	4.7 lbs

**Voltage measured without workload. Initial battery voltage reaches maximum of 20 volts. Nominal voltage is 18 volts.
*** Charger output 1 and output 2 mean two ports with the same output voltage and current.

ACCESSORIES

	WG183	WG183.9
Battery pack (WA3525)	2	/
Charger (WA3770)	1	/
Spool (WA0007)	1	1
Spool cap(WA0216)	1	1
Safety guard	1	1
Auxiliary handle	1	1

Only use the appropriate accessories intended for this tool. Accessory information can be found on the product packaging, at a Worx dealer or on our website at www.worx.com

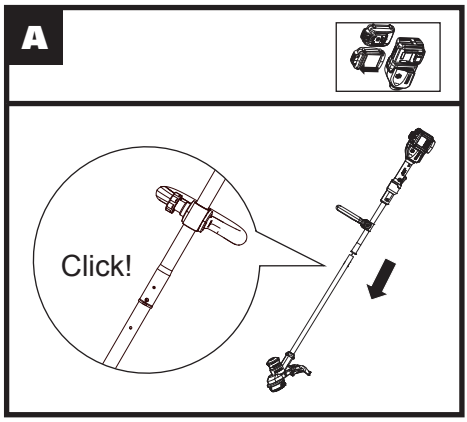
A
Click!

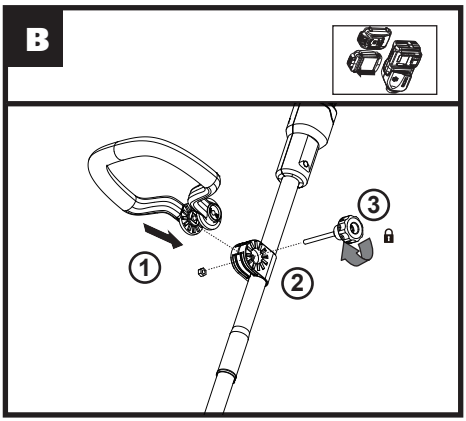
B
1
2
3

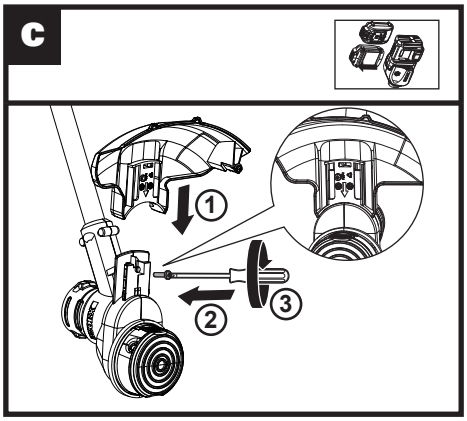
C
1
2
3

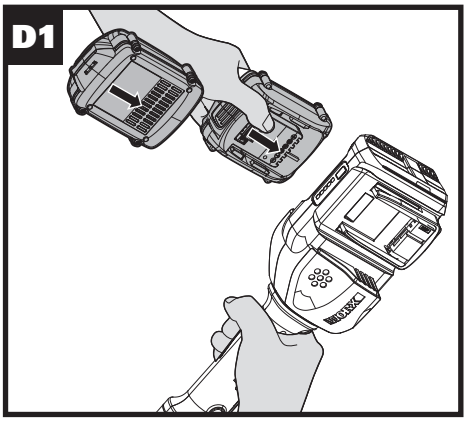
D1

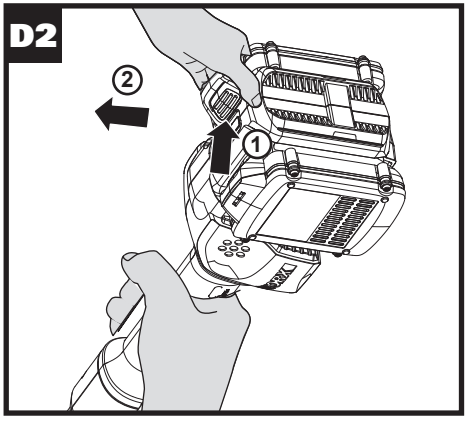
D2
1
2

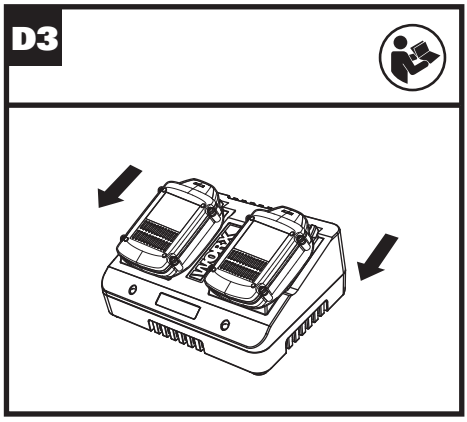
D3

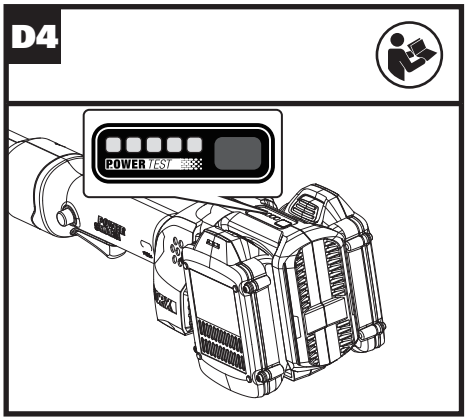
D4
POWER TEST

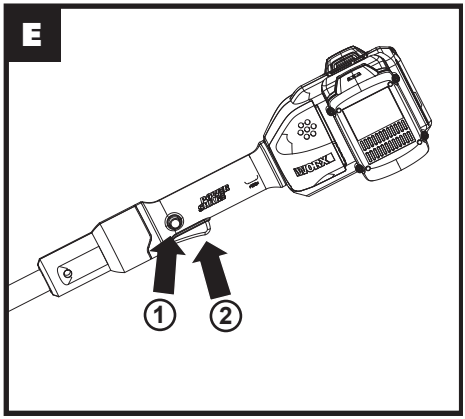
E
1
2

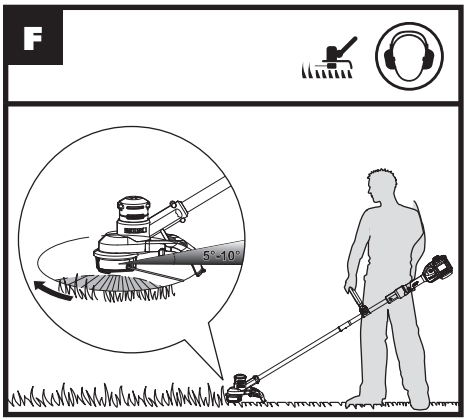
F
5°-10°

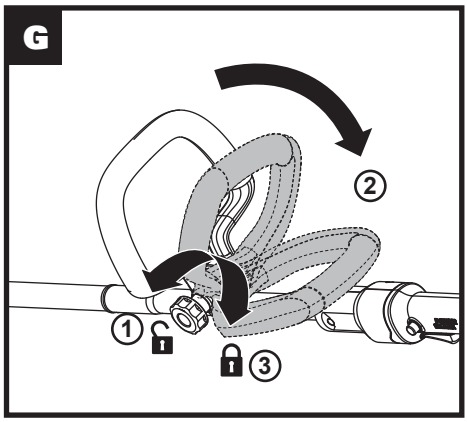
G
1
2
3

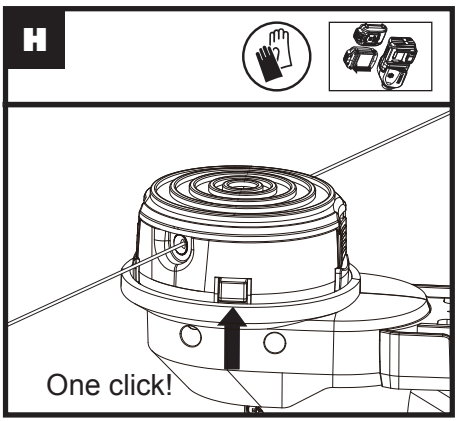
H
One click!

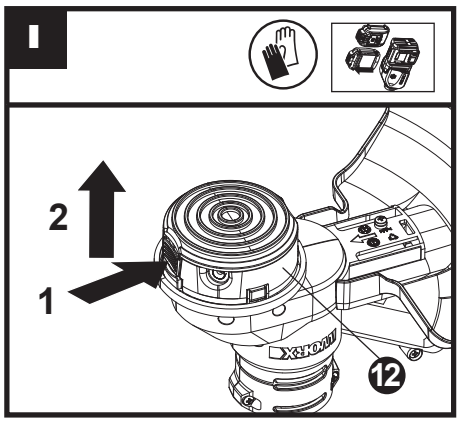
I
2
1
12

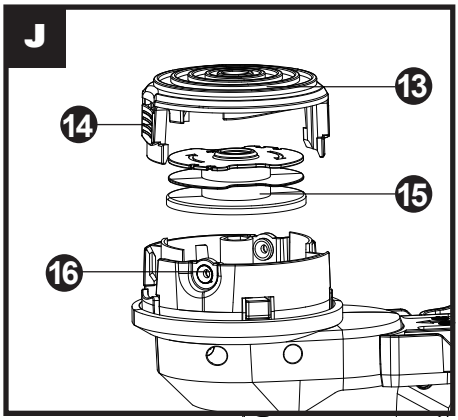
J
13
14
15
16

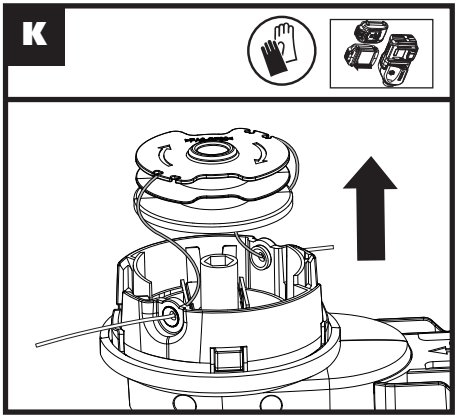
K

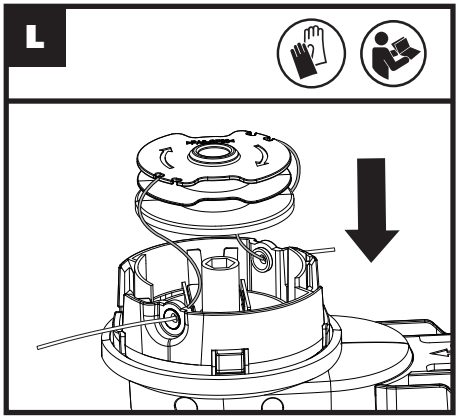
L

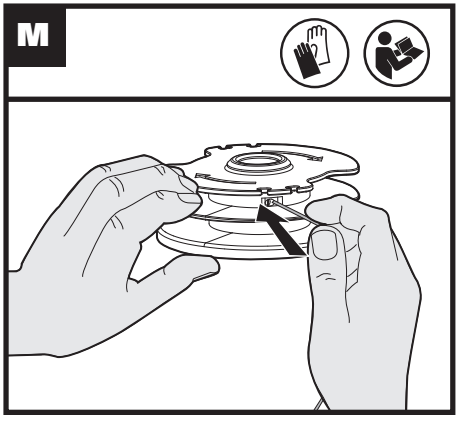
M

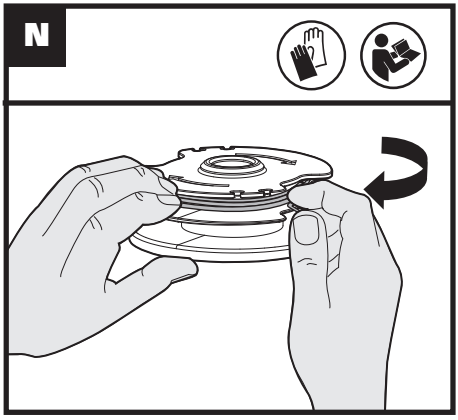
N

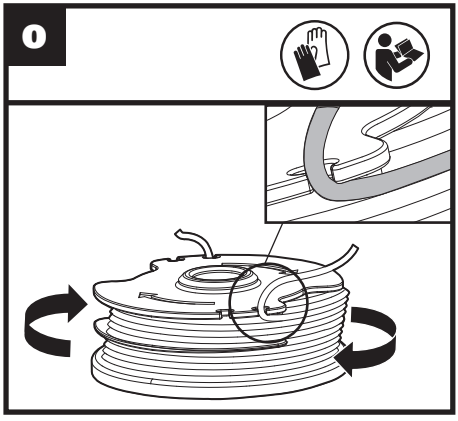
O

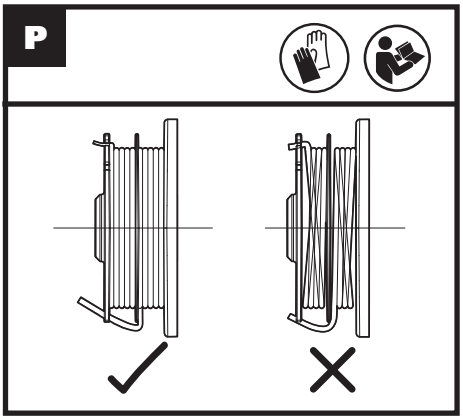

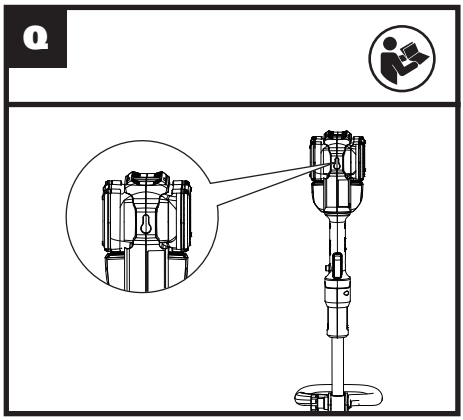

ASSEMBLY & OPERATION

ACTION	FIGURE
Assembly	
Assembling the Trimmer Shaft	See Fig. A
Assembling the Auxiliary Handle	See Fig. B
Assembling the Safety Guard	See Fig. C
Installing and Removing the Battery Pack **NOTE:** **• This machine will only run when 2 batteries are installed. It is recommended to use the same two batteries and charge the two batteries at the same time.** **• When you use two batteries with different power, the machine will only run to the lower common denominator.**	See Fig. D1, D2
Charging the battery pack **NOTE:** • The batteries are shipped uncharged. Each battery must be fully charged before the first use. • Always fully charge the two batteries at same time. More details can be found in charger's manual.	See Fig.D3
Battery power indicator on the machine See details in BATTERY STATUS section	See Fig.D4
OPERATION	
On/Off Switch **WARNING!** The cutting head continues to rotate after the trimmer has been switched off; wait until it has completely stopped then lay down the tool.	See Fig. E
Trimming	See Fig. F
-Adjusting the Auxiliary handle	See Fig. G
Manually feeding the line	See Fig. H
Removing the Cap	See Fig. I
Cutting Head	See Fig. J
Changing the line spool	See Fig.K,L
Manually winding the line	See Fig. M,N,O,P

BATTERY STATUS (See Fig. D4)
Before starting or after use, press the button beside the power indicator light on the machine to check the battery capacity. During operation, the battery capacity will be indicated automatically by the battery power indicator. The indicator constantly senses and displays the battery condition as follows.
For the machine with 2 battery packs with different power, the power indicator light displays the battery condition with the lower one of the two batteries.

Battery power indicator status	Battery condition
Five green lights (■■■■■) are illuminated.	The two batteries are in a highly charged condition.
Two, three or four green lights are illuminated.	The two batteries have a remaining charge. The more lights are illuminated, the more battery capacity.

Only one green light (■□□□□) is illuminated.	At least one battery is almost depleted and needs to be charged.
No light is illuminated.	At least one battery is not fully installed or battery may be defective.
Only one light is flashing twice per cycle.	At least one battery is over discharged (please refer to the battery charge condition), please recharge the two batteries at once before use again or storage.
Only one light is flashing three times per cycle.	At least one battery is hot, wait for them cool down before start again.
Only one light is flashing four times per cycle.	The machine is over load. Raise the cutting height or push slowly.

OPERATION INSTRUCTIONS

WARNING! The charger and battery pack are specially designed to work together so do not attempt to use any other devices. Never insert or allow metallic objects into your charger or battery pack connections because of an electrical failure and hazard will occur.

1.AUTOMATIC LINE FEED SYSTEM

When initially switching on the trimmer, a small length of line is fed out.
A 'clattering' noise will be heard for a short time. This is normal and is caused by the line being cut by the line cutter. Once the line is cut to the correct length, the 'clattering' noise will stop and the trimmer motor will run at full speed.
To feed more line, stop the trimmer completely, then restart, allowing the motor to reach full speed. Repeat this until you hear the 'clattering' noise of the line cutting. (Do not repeat this procedure more than 6 times)

2 . MANUALLY FEEDING THE LINE (See Fig. H)

Press and release manual line feed button, whilst gently pull out the lines until the lines reaches the line cutter. When the required amount of line is fed out, gently pull on the second line (there is no need to press the manual line feed button again). If the line extends past the line cutter, too much line has been fed out. If too much line is fed out, remove the spool cap and rotate the spool anti-clockwise until the line is at the desired length.

Removing the Cap (See Fig. I)

Press and hold in the two latches. Pull the spool cap away from the Cutting Head. Keep the cap and spool holder clean from debris. To replace the cap, press it firmly towards the spool holder. Ensure that it is correctly connected by trying to remove it without depressing the two latches.

Changing the Line Spool (See Fig. K, L)

First take off the cap and remove the old spool. Place new spool into cutting head. Feed one line through the eyelet, then repeat for second line (See Fig. L).
Release line from cleat on the Spool. Reattach the cap.
WARNING! Your Trimmer is designed to only use line with a maximum diameter of 0.065"(1.65mm). Only use nylon line.
IMPORTANT - Always wind the line onto the upper section of the spool first.

3. MANUALLY WINDING THE LINE (SEE FIG.M, N, O, P)

Take approximately 16ft (5 m) line and insert 5/8" (15 mm) of line into one of the holes in the upper section of the spool. Wind the line in the direction of the arrows on the top of the spool.
Leave approximately 3.9'' (100 mm) of line unwound and place it into the cleat. Repeat on the lower section of spool. Care should be taken to ensure that the line is neatly coiled on the spool. Failure to do so will impair the efficiency of the automatic line feed. Then fit the spool as described above in "Changing the Line Spool".

STORING YOUR GRASS TRIMMER

Always remove the battery pack from your trimmer after use.

To store your grass trimmer

The trimmer is provided with a hanging slot for storing the trimmer on the wall. (See Fig. Q)
Store in a dry place where the trimmer and battery can be protected from damage.

MAINTENANCE

Always remove the battery pack from your trimmer after use.
Always check the product prior to being used for any damage.
After use, disconnect the battery from the tool and check for damage.
Your power tool requires no additional lubrication or maintenance. There are no user serviceable parts in your power tool. Never use water or chemical cleaners to clean your power tool. Wipe clean with a dry cloth. Always store your power tool in a dry room temperature location. Keep the motor ventilation slots clean. Keep all working controls free of dust.

FOR BATTERY TOOLS

The ambient temperature range for the use and storage of tool and battery is 0℃-45℃.
The recommended ambient temperature range for the charging system during charging is 0℃-40℃.

TROUBLESHOOTING

The following table gives problems and actions that you can perform if your machine does not operate correctly. If these do not identify and correct the problem, contact your Worx Customer Service at 1-866-354-Worx.



Warning: Switch the machine off and remove the battery prior to any troubleshooting.

Problems	Possible Causes	Corrective Action
Trimmer fails to operate.	Battery discharged.	Recharge battery; also see the content in charger manual
	Battery too hot/ cold.	Allow to cool/ warm.
	Motor is broken.	Contact Service Agent.
	Internal wiring of machine damaged.	Contact Service Agent.
Trimmer runs intermittently.	Motor is broken.	Contact Service Agent.
	Battery not fully charged.	Recharge battery.
	On/Off switch defective.	Contact Service Agent.
Excessive vibrations/ noise.	Machine defective.	Contact Service Agent.
	Line spool is not wound well.	Rewind the line. See ''MANUALLY WINDING THE LINE''
Cutting time per battery charge too short.	Battery has not been used for long period or only charged for short term.	Fully charge battery; also see the content in charger manual.
	Grass too high.	Cut in stages.
	Battery defective.	Replace the battery.
Machine does not cut.	Line broken.	Replace the line
	Battery not fully charged.	Recharge battery; also see the content in charger manual.
	Motor is broken (speed is too low).	Contact Service Agent.
	Grass entangled around cutting head.	Remove grass.
Continuous lighting of the battery charge indicator. No charging procedure possible.	Battery not (properly) inserted.	Properly insert battery into battery charger.
	Battery contacts contaminated.	Clean the battery contacts or replace the battery.
	Battery defective.	Replace the battery.
Battery charge indicator does not light up.	Plug of battery charger not plugged in (properly).	Insert mains plug (fully) into the socket outlet.
	Socket outlet, mains cable or battery charger defective.	Check the mains voltage; have the battery charger checked by an authorized after-sales service agent.
Auto feed does not work	Cutting line is not wound well. The line is tangled.	Manually feed the line, if still can not feed out, remove the Spool out and rewind the line.
	Line is used up.	Replace with a new spool of line.