POWERED BY
Wenoker

USER MANUAL

Wenoker Exercise Bike

Bike Model: JC303

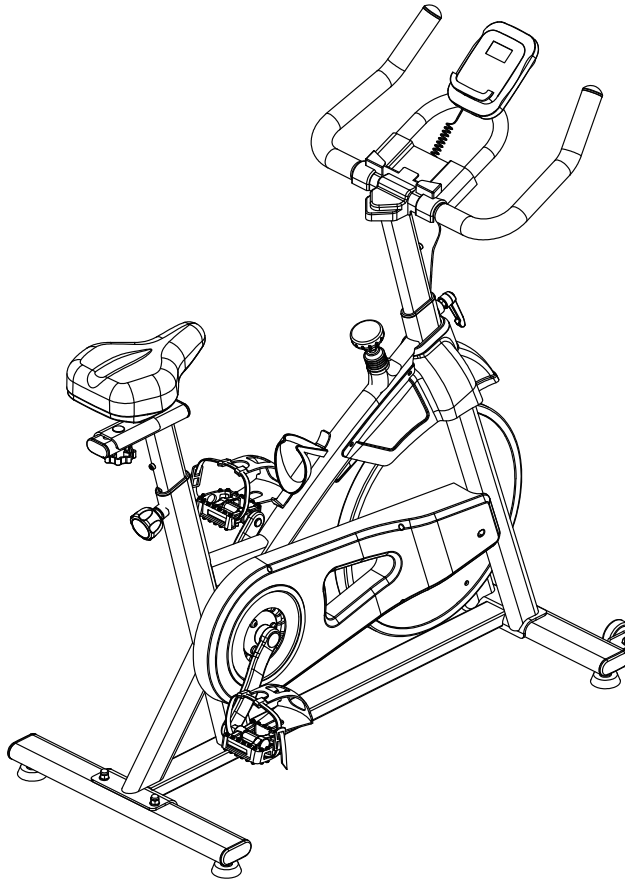

Questions or Concerns?

IMPORTANT!

Please read all details before use, and keep this user manual for future reference.

PLEASE CONTACT US BEFORE THE RETURN: Mon-Fri,9:00 am-5:00 pm PST/PDT

Wenokerservice@outlook.com

English ---------- 1-24

CONTENT

WARNING DECAL PLACEMENT ---------- 2
IMPORTANT PRECAUTION ---------- 3
BEFORE YOUBEGIN ---------- 4
EXPLODED DRAWING ---------- 5
PART LIST ---------- 6
PEDAL INSTALLATION ---------- 8
ASSEMBLY INSTRUCTION ---------- 12
EXERCISE GUIDELINES ---------- 18
CONSOLE INSTRUCTIONS ---------- 19
TROUBLE SHOOTING ---------- 21
WARRANTY INFORMATION ---------- 24

English

Hey!

Please register your warranty to keep yourself protected!



Email your product model to
Wenokerservice@outlook.com

WARNING DECAL PLACEMENT

This figure shows the location of the warning decals. If the warningdecal is lost or illegible, please contact the email address on the cover of this manual and request a free replacement decal. Please attach the decal in the indicated position.
Note: The decal(s) may not be shown at actual size.

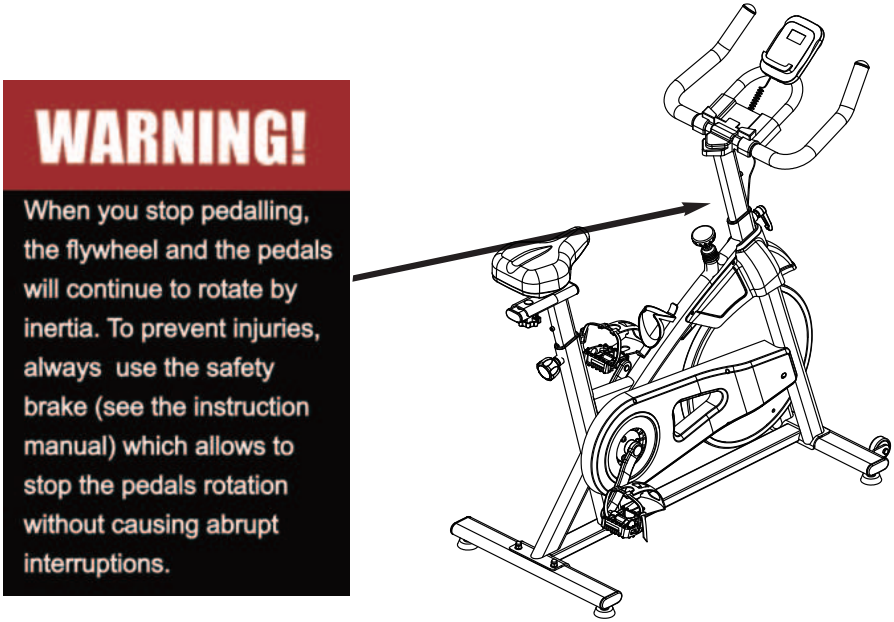

IMPORTANT SAFETY PRECAUTIONS

Warning: to prevent serious injury, read all important precautions and instructions contained in this manual and all warnings related to this product before using it. Wenoker shall not be liable for any personal injury or property damage caused by the use of this product.

1.Exercise bike owners are responsible for ensuring that all users are fully aware of all precautions.

2.Consult your physician before starting exercise. It is especially important for those over 35 years old and those with health problems.

3.This product is not intended for use by people with reduced physical, sensory or mental capacity or lack of experience or knowledge. For your safety,please use them under the protection of the person in charge.

4. Use your exercise bike only as described in this manual.

5. This product should only be used at home. Please do not use them for commercial, rental,or facility use.

6. Please keep this item in a room free of moisture and dust. Do not place it in the garage, on the balcony, or near the water.

7.Put this product on a flat place and put on a mat to protect the floor and carpet. Make sure you have at least 2ft (0.6m) of space around your bike.

8. Every time you use this product, check all the parts and tighten them properly. Replace worn parts immediately.

9.keep children and pets under the age of 13 away from exercise bikes.

10.Please wear appropriate clothing during exercise. Do not wear loose clothes that might get caught on an exercise bike. Always wear sneakers to protect your feet.

11.Do not use this product if you weigh more than 353 LBS(160kg).

12.Be careful when riding or getting off an exercise bike.

13.When using an exercise bike, keep your back straight.

14. This product has no automatic stop function, so the pedal continues to move until the flywheel stops. Lower the speed while being controlled.

15.Press the brake knob from top to bottom to quickly stop the flywheel.

16.When not using an exercise bike, please tighten the brake knob completely to prevent the flywheel from moving.

17. Do not lubricate the brake pads as it will damage them.

18. Excessive exercise can lead to serious injury or death. If you faint, shortness of breath, or feel pain while exercising, stop immediately and cool down.

19. Discard the battery in accordance with all local laws and regulations.

20. The product covers an area of 120*60cm; Net weight: 25kg, Gross weight: 28kg.

BEFORE YOU BEGIN

Thank you very much for your purchase of **WENOKER**'s exercise bike. Cycling is an effective exercise to increase cardiovascular system fitness, increase endurance and tighten the body. Exercise bikes offer a variety of features designed to make training at home more effective and enjoyable.

Please read these instructions carefully before using an exercise bike. If you have any questions after reading, please contact the email address on the cover of this manual. The model number and serial number of the product are also printed on the cover.

Before reading further,please familiarize yourself with the parts that are labeled in the drawing below.

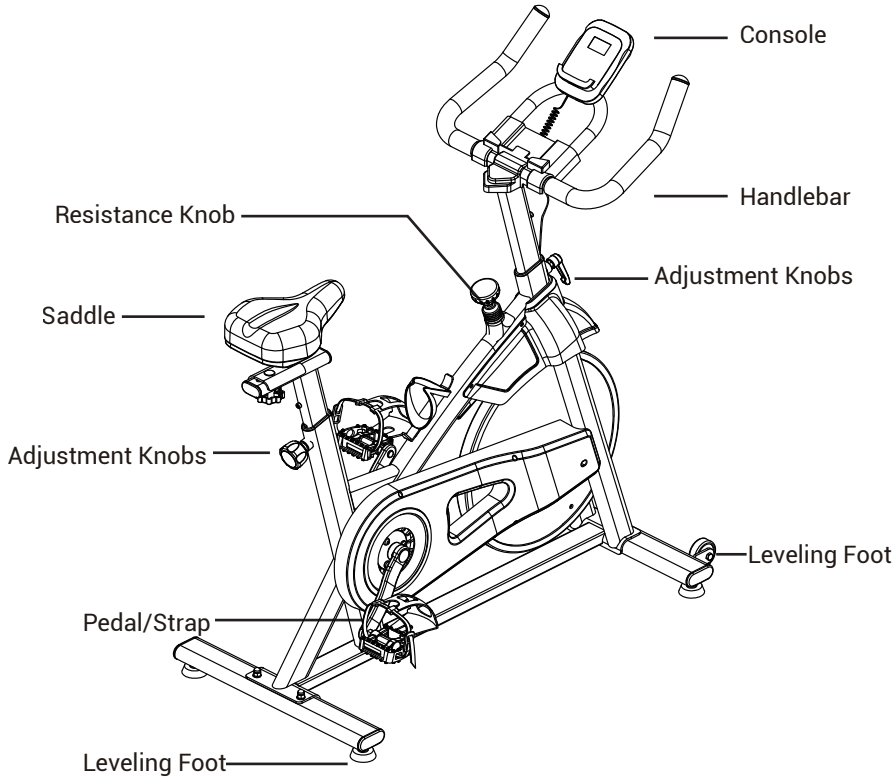

EXPLODED DRAWING

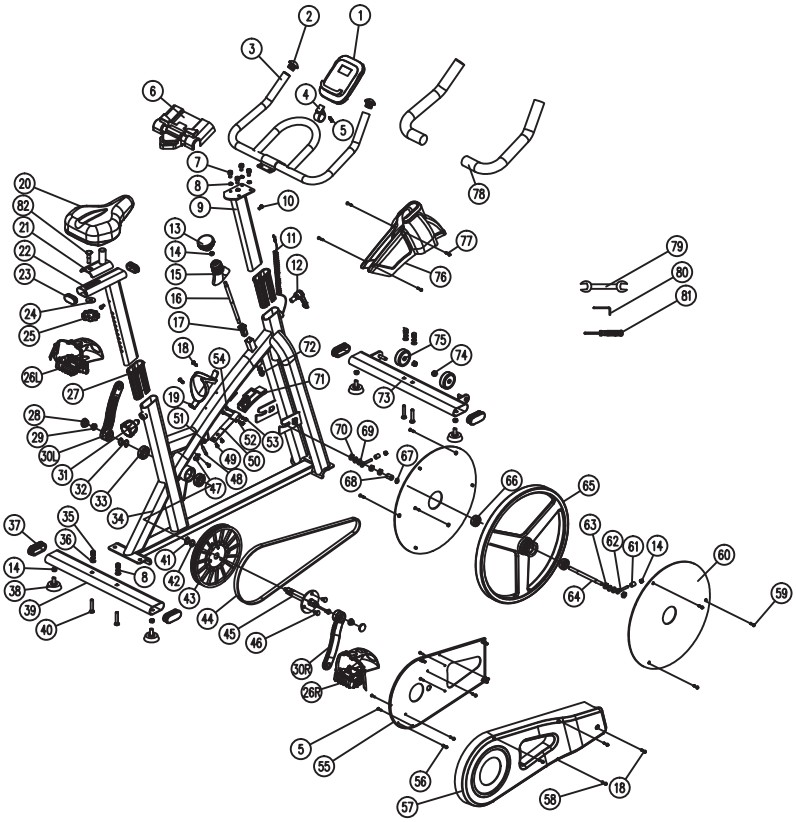

PART LIST

PART NO.	DESCRIPTION	QTY	PART NO.	DESCRIPTION	QTY
1	Console	1	22	Seat Post	1
2	φ25 End Cap	2	23	Angled Pipe Plug 25*50	2
3	Handlebar	1	24	FlatWasher10*20*3T	1
4	Console Holder	1	25	Knob	1
5	Screw M4*20L	4	26L	Pedal(L)	1
6	IPAD Holder	1	26R	Pedal(R)	1
7	Hex Nut M8*16L	4	27	Tube Clamp	2
8	Split Lock Washerφ8	8	28	Crank plug	2
9	Handlebar Post	1	29	Flange nut M10*1.25	2
10	Hexagonal Socket M6*10L	2	30L	Crank(L)	1
11	Sensor Wire	1	30R	Crank(R)	1
12	Knob M16*23L	1	31	Conical Knob M16*1.5*22L	1
13	Brake knob	1	32	Screwφ20	2
14	Hex NutM8	8	33	Bearing 6004	2
15	Brake Cover	1	34	Frame	1
16	Brake Rod	1	35	Domed Nut M8	4
17	Nylon Bushing	1	36	FlatWasherφ8*φ18*2T	4
18	Screw M4.8*19L	3	37	End Cap 30*70	4
19	Bottle holder	1	38	Foot Pad	4
20	Seat	1	39	Rear Tube	1
21	Slider	1	40	Carriage Bolt M8*45	4

PART LIST

PART NO.	DESCRIPTION	QTY	PART NO.	DESCRIPTION	QTY
41	Flat Washerφ20	1	62	Adjuster M8*55L	2
42	FlatWasherφ10*φ20*2T	1	63	Hex Nut M10*1.0*5T	1
43	Belt Pulley	1	64	Flywheel Axle	1
44	Belt 510J6	1	65	Flywheel	1
45	Axle	1	66	Bearing 6300	2
46	Hexagon Screw M8*10	3	67	Washerφ10	1
47	Sensor Holder	1	68	Flywheel axle pipe φ10*φ15*24T	1
48	Sensor	1	69	Washerφ10*φ20*2T	4
49	Hex Nut M5*10	2	70	Het Nut M10*1.0*8T	4
50	Brake Clip	1	71	Brake Frame	1
51	Cable Plug	2	72	Domed Nut M8	1
52	Spring Washerφ5	2	73	Front Tube	1
53	Screw M5	2	74	Nylon Nut M8	2
54	Hex Nut M5*30L	2	75	Wheelφ48*φ8*20mm	2
55	Chain Cover(inner)	1	76	Trim Cover	1
56	Screw M4.2*19mL	5	77	Screw M4.2*121	4
57	Chain Cover(Outer)	1	78	Foam Rubberφ25*3T*430L	2
58	Screw M4*20L	3	79	Open-ended Wrench 13*15	1
59	Screw M4*10L	6	80	Hexagon Wrench 6MM	1
60	Flywheel	2	81	Cross Screwdriver	1
61	Drivepipeφ10*φ15*4T	2	82	Carriage Bolt M10*40	1

RIGHT PEDAL INSTALLATION

Warning: Please read the pedal assembly instructions carefully before installing the pedal. Follow the instructions to assemble it to effectively avoid pedal problems.

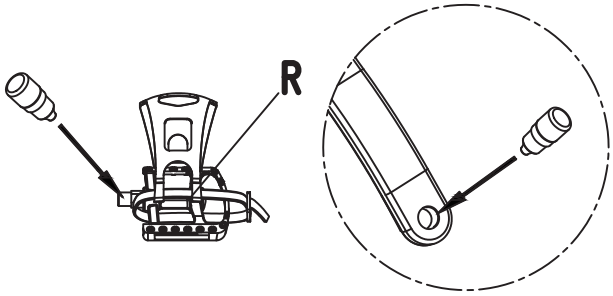

Step 1:
Apply anti-loosening glue to the threads of the Right Crank or Right Pedal, as shown in Figure 1.

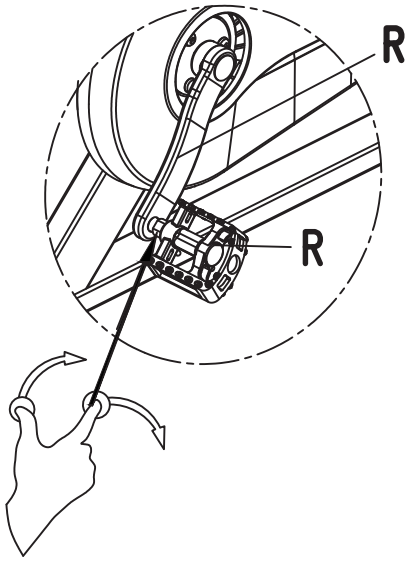

Step 2:
Align the threaded end face of the Right Pedal with the threaded end face of the Right Crank. The threaded axis of the Right Pedal is perpendicular to the Right Crank at 90 degrees. Tighten the thread of the Right Pedal into the Right Crank by hand for 2-3 threads (2-3 turns), as shown in Figure 2

RIGHT PEDAL INSTALLATION

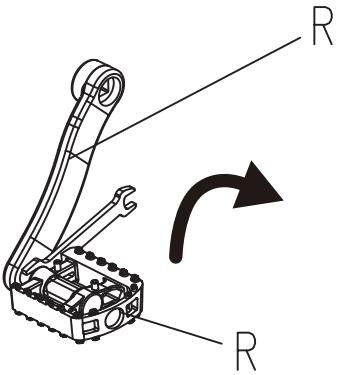

Step 3:
Use a 15mm open-end wrench to clamp the inner plane of the Right Pedal thread, and screw it clockwise (in the direction indicated by the arrow on the crank label, i.e. the direction of the flywheel) to the bottom (the Right Pedal thread is completely screwed into the Right Crank, and the bottom surface of the Right Pedal thread is in contact with the Right Crank surface). Tighten it firmly until it cannot be turned by hand. As shown in Figure 3.

Complete the above steps in order, and the Right Pedal is assembled.

Notes:
1. Screwing in the wrong direction when assembling the pedal will damage the crank thread and make it impossible to complete the assembly.
2. When assembling for the first time, the pedal thread must be coated with anti-loosening glue and locked to the bottom, otherwise, the pedal will loosen and fall off, and the crank teeth will be damaged and cannot be used.
3. After 7-15 days of use, check whether the pedal is loose (shake the pedal up and down by hand to judge). If it is loose, tighten it immediately with an open-end wrench before use. Failure to tighten in time will cause the crank thread to wear and cause the pedal to fall off, making it unusable.

LEFT PEDAL INSTALLATION

Warning: Please read the pedal assembly instructions carefully before installing the pedal. Follow the instructions to assemble it to effectively avoid pedal problems.

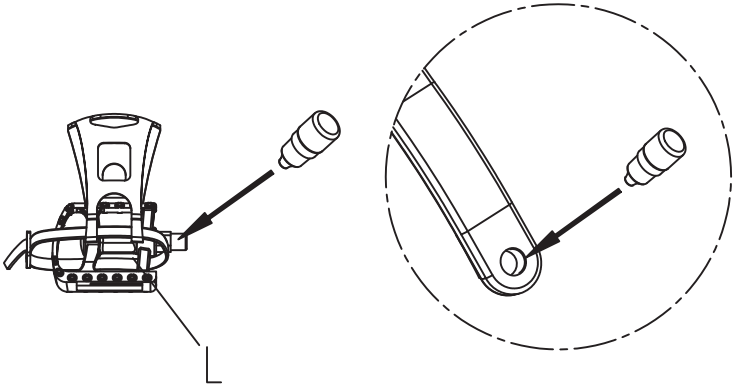

Step 1:
Apply anti-loosening glue to the threads of the Left Crank or Left Pedal, as shown in Figure 1.

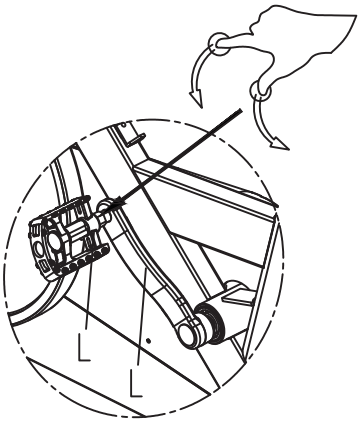

Step 2:
Align the threaded end face of the Left Pedal with the threaded end face of the Left Crank, with the Left Pedal thread axis perpendicular to the Left Crank at 90 degrees, and manually screw the Left Pedal thread into the Left Crank 2-3 teeth (2-3 turns), as shown in Figure 2.

LEFT PEDAL INSTALLATION

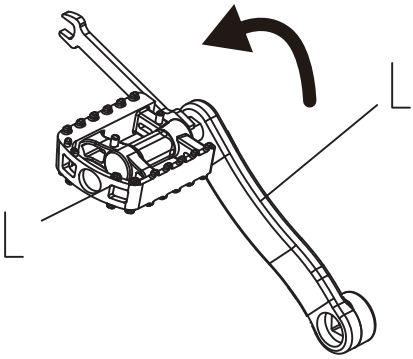

Step 3:
Use a 15mm open-end wrench to clamp the inner plane of the Left Pedal thread, and screw it counterclockwise (in the direction of the arrow on the crank label, i.e. the direction of the flywheel) to the bottom (the Left Pedal thread is completely screwed into the Left Crank, and the bottom surface of the left pedal thread is in contact with the left crank surface). Tighten it firmly until it cannot be turned by hand. As shown in Figure 3

Complete the above steps in order, and the Left Pedal is assembled.

Notes:
1. Screwing in the wrong direction when assembling the pedal will damage the crank thread and make it impossible to complete the assembly.
2. When assembling for the first time, the pedal thread must be coated with anti-loosening glue and locked to the bottom, otherwise, the pedal will loosen and fall off, and the crank t eeth will be damaged and cannot be used.
3. After 7-15 days of use, check whether the pedal is loose (shake the pedal up and down by hand to judge). If it is loose, tighten it immediately with an open-end wrench before use. Failure to tighten in time will cause the crank thread to wear and cause the pedal to fall off, making it unusable.

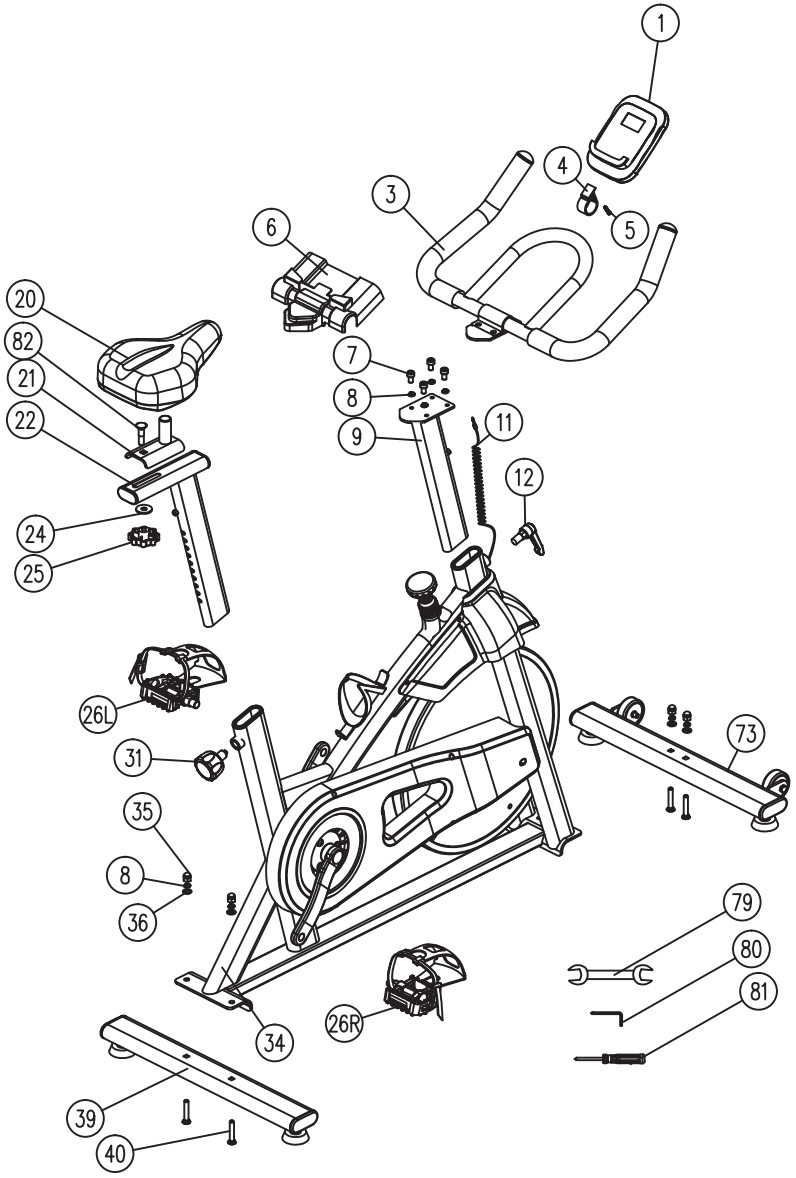
1
4
3
5
6
20
82
21
22
7
8
9
11
12
24
25
26L
31
73
35
8
36
79
80
81
26R
34
39
40

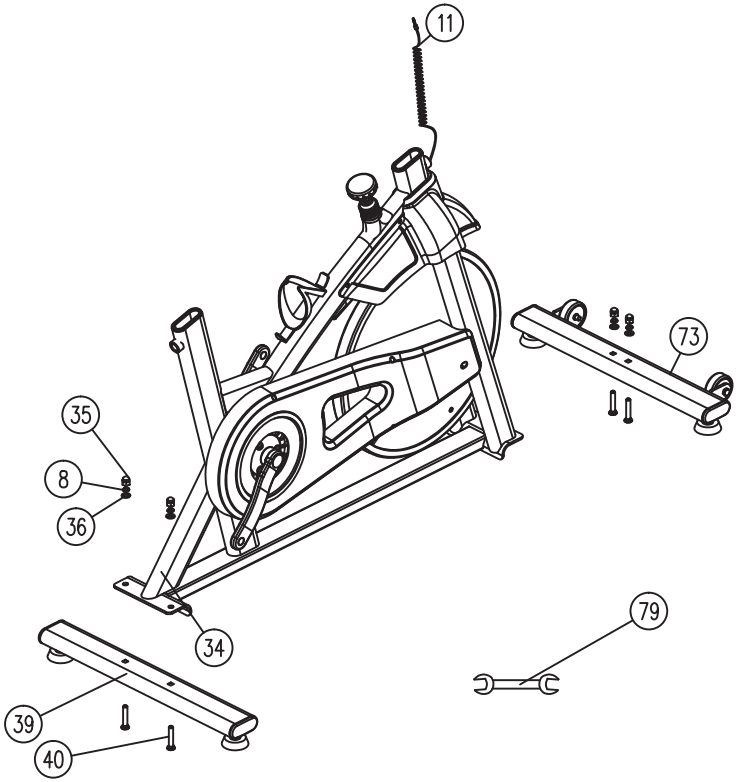

STEP1

Using Open-ended Wrench(79), Carriage Bolt (40), Domed Nut (35) with Split Lock Washer (8) and a Flat Washer (36) attaching the Rear Tube (39) to the Frame (34) and then the Front Tube (73) to the Frame in the same manner.

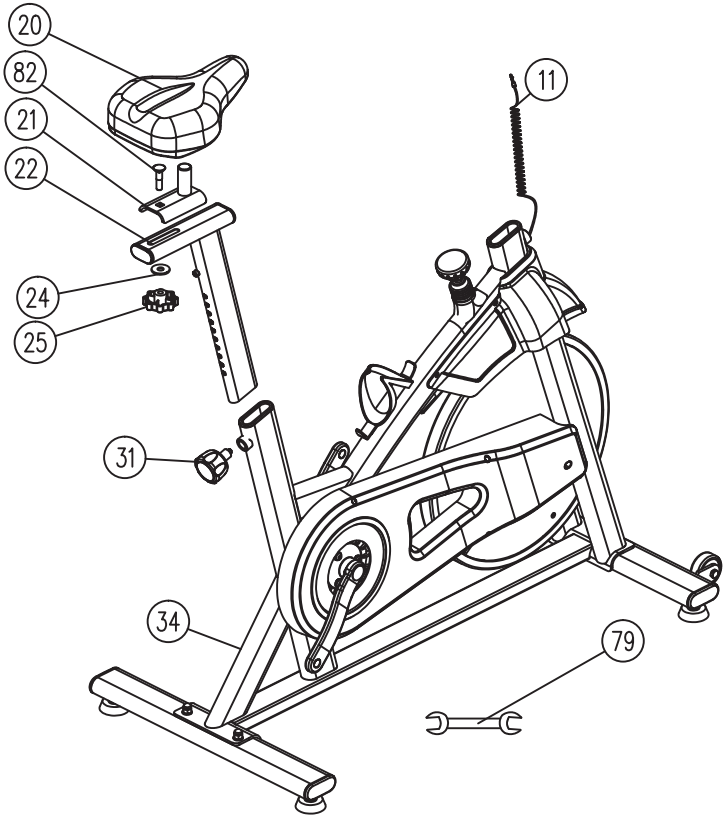

STEP2

Assemble the Seat Post (22) to the Frame(34) with a Conical Knob (31), and the Slider (21) was fixed to the Seat Post (22) by a Flat Washer (24), Carriage Bolt (82), Knob(25).And then the Seat (20) was assembled to the Slider (21) by an Open-ended Wrench (79).

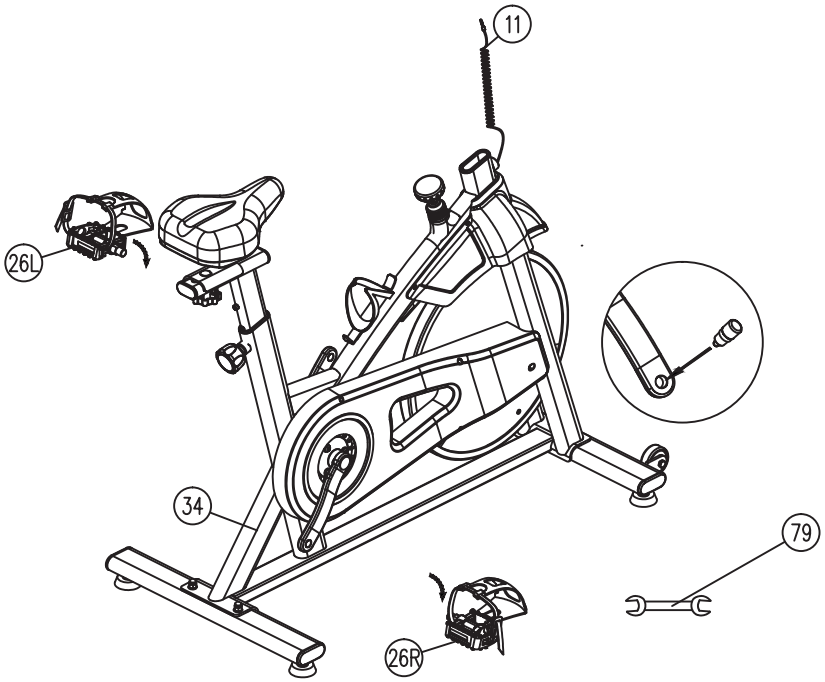

STEP3

As shown in the figure, add anti-loose glue to the threaded of the left and right crank, screw the Left Pedal (26L) into the Left Crank and turn counterclockwise with an Open-ended Wrench (79), and lock it with force. Screw the Right Pedal (26R) into the Right Crank and turn clockwise with the Open-ended Wrench(79) and lock it with force.

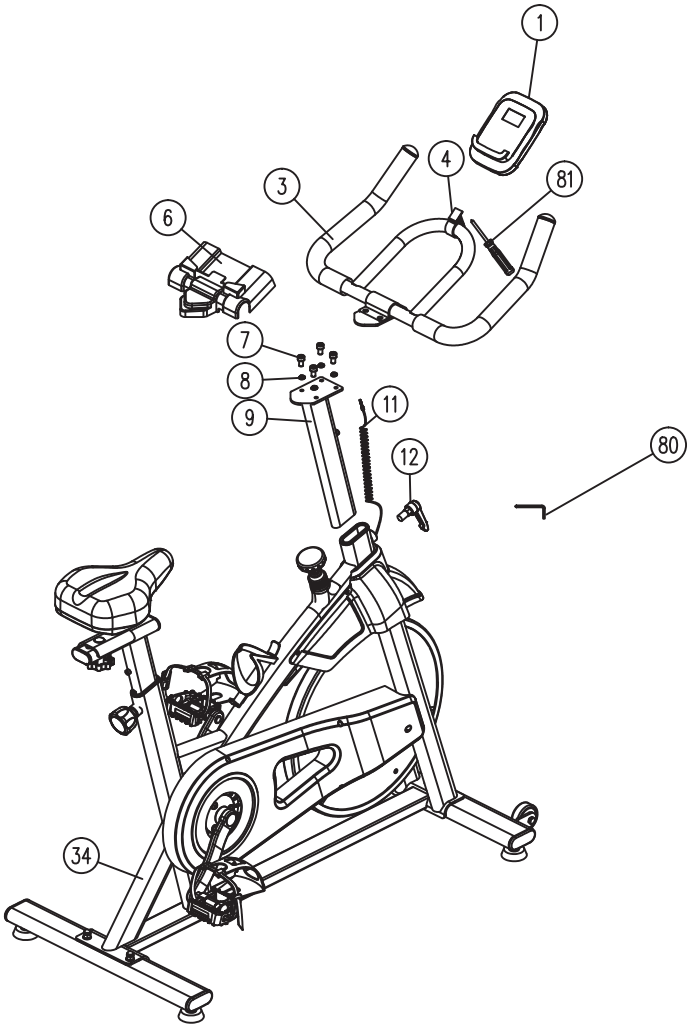

STEP4

First, set up the Handlebar Post (9) on the frame (34) and lock with Knob (12),then lock the Handlebar (3) on the Handlebar Post (9) with the Hex Nut (7), Split Lock Washer (8) and the Hexagon Wrench (80) on the Handlebar Post. Then fasten the IPAD Holder(6) on the Handlebar. Use a Cross Screwdriver(81) to lock the Screw(5) of the Console Holder (4) and fix it on the Handlebar (3). Then insert the Console(1) into the Console Holder(4), and insert the Sensor Wire (11) into the Sensor hole of the Console.

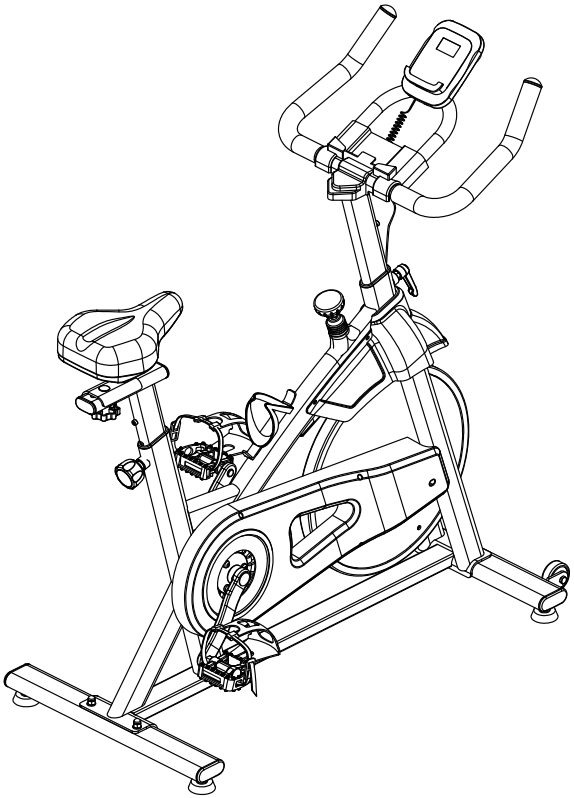

Now you finished your exercise bike assembled,please adjust the Handlebar Post and Seat Post position according to your needs.

EXERCISE GUIDELINES

Using an exercise cycle offers several benefits. Lack of physical strength, muscle tone is improved and you can diet in combination with a caloric controlled diet.

1.Warming-up Phase

At this stage, the blood flow accelerates and the muscles function properly. The risk of spasms and muscle damage can also be reduced. We recommend doing some stretch exercises as shown below. Each stretch should be kept for about 30 seconds.

Do not stretch or stretch your muscles. If you experience pain, discontinue.

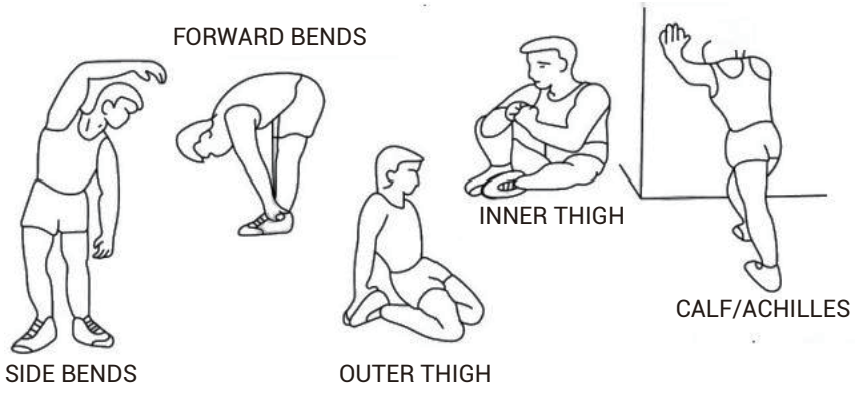

2.Use

The saddle height can be adjusted up or down by removing the adjustment knob.The saddle post has different height adjustment holes.Once you have selected the required height,undo and tighten the adjustment knob.The load adjustment knob allows you to change the load adjustment of the pedal.High load makes it difficult to pedal,and low load makes it easier to pedal.For better results,increase the load when using an exercise bike.

CONSOLE INSTRUCTIONS

FUNCTIONAL BUTTON:
MODE - Push down to select functions.
- Push down to reset time、distance and calories for 2 seconds.
SET - To set the values of time、distance and calories when not in scan mode.
RESET - Push down to reset time、distance and calories.

FUNCTIONS AND OPERATIONS:
1.**SCAN**: Press the "MODE" button to select the function to "TIME", at which time the "SCAN" words appear on the left of the monitor and monitor will rotate through all the 6 functions:time, speed, distance, odometer and calorie. Each display will be hold 6 seconds. In the process of cyclic display of Each function, press "MODE" button once to make the"SCAN" appear disappear in any function mode to display this function. If you want to return to "SCAN" again, press the "MODE" button to select the function to "TIME". In"SCAN" mode,the "SCAN" word on the left of the monitor flashes continuously.
2.**TIME**: Display the time from exercise start to end.
3.**SPEED**: Display current speed.
4.**DISTANCE**: Display the distances from exercise start to end.
5.**ODOMETER**: Monitor will display the total accumulated distance, after the battery is reinstalled, the value will return to zero.
6.**CALORIES**: Display the calories burned from exercise start to end.

TARGET TRAINING SETTINGS:
This computer has three target training modes: time、distance and calories (when switching to the target function,if there is "SCAN" font flashing on the display, you need to press the "MODE" button again to make the "SCAN"font disappear before setting).
TIME target training mode: first press the "MODE" button to switch to the "TIME" function, and then press the"SET" button to set the target time (Press and hold the set button to speed up the setting).when it reaches the required time, stop the button. Then start to use the machine, and the display will start to count down.When the countdown reaches zero, the time function flashes to indicate the completion of the training target. At this time, if you continue to train, the computer will automatically start to count up from zero.
DISTANCE target training mode: first press the "MODE" button to switch to the "DIST" function , and then press the "SET" button to set the target distance (Press and hold the set button to speed up the setting). when it reaches the required distance,stop the button. Then start to use the machine, and the display will start to count down. When the countdown reaches zero, the distance function flashes to indicate the completion of the training target. At this time, if you continue to train, the computer will automatically start to count up from zero.
CALORIE target training mode: first press the "MODE" button to switch to the"CAL" function, and then press the"SET" button to set the target calorie (Press and hold the set button to speed up the setting). when it reaches the required calorie, stop the button. Then start to use the

machine, and the display will start to count down.When the countdown reaches zero, the calorie function flashes to indicate the completion of the training target.At this time, if you continue to train, the computer will automatically start to count up from zero.
If you want to modify the target data after the setting process or completion, press "RESET" button directly to clear all settings, and then reset according to the previous description.

NOTE:
1.If the battery symbol on the display lights up, please replace the battery.
2. The monitor will automatically shut off if there is no signal received after 2 minute.
3.The monitor will be auto powered on when starting to exercise push button signal in.
4.When you stop exercising for 4 seconds, the display will stop calculating and a" STOP" will be displayed on the screen. When you start exercising, the display will automatically start calculating and the"STOP" will disappear.

SPECIFICATIONS:

FUNCTION	SCAN	Every 6 seconds
	TIME	0:00~99:59
	SPEED	0.0~99.9 KM/H(MILE/H)
	DISTANCE	0.00~99.99 KM(MILE)
	ODOMETER	0~9999 KM(MILE)
	CALORIES	0.0~999.9 CAL
BATTERY TYPE		2pcs of SIZE-AA or UM-3
OPERATING TEMPERATURE		0°C～+40°℃
STORAGETEMPERATURE		-10°℃~+60°℃

TROUBLE-SHOOTING

No.	Possible Problems	Solution
1	Makes noise while riding	Check whether the screws of the left and right pedals and the front and rear foot tubes are tightened. After tightening, ride again to see if there is any noise. If so, the bearing should be broken. Contact customer service to replace the bicycle with a new one.
2	The wheels can't be turned	Check whether there is a buffer pad at the bottom of the wheel. If so, please remove it. This buffer pad is used to protect the wheel during transportation.
		Check if the resistance knob is tightened. If it is, loosen the knob in the "-" direction and adjust the resistance to the minimum gear so that the pedals and cranks can rotate.
3	Pedal falls off	Lock the pedals during installation to prevent them from loosening and falling off.
		Check the crank and pedal threads for damage. If damaged, contact customer service for replacement.
		If the threads of the crank and pedal are not damaged, please drop a small amount of "Anti-loose glue" on the threads of the pedal head and then tighten the pedal.
4	The foot cage cannot be fixed and keeps sliding	Check whether the foot cage is worn tightly.
5	The foot cover flew off during riding	It is recommended to remove the screws on both sides of the foot cover. Use a screwdriver and an 8mm open end wrench to remove the foot cover. If you need an operation video, please contact customer service.
6	Monitor is not working properly	Reinstall new 2pcs 1.5V AA batteries (Applicable Models: JC303), restart the monitor, and see if it can be used normally. If not, please contact customer service for replacement.
7	The monitor cannot be turned on	Please check if the battery is installed backwards. If the assembly is normal, there may be a problem with the monitor. Contact customer service to send the new monitor.
8	The "STOP" on the monitor display remains on and no data is recorded	There may be something wrong with the sensor bar or the sensor line is bad. Please contact customer service to replace the sensor cable and monitor.
9	The monitor cannot be reset	When you stop exercising, when "STOP" is displayed on the left side of the monitor interface, press and hold the "MODE" button for 3 seconds, and the time, speed, and distance can be reset to 0. Only ODO is the cumulative total distance, which cannot be reset to zero. You need to remove the battery and reinstall the battery to reset ODO. Note: When "STOP" is not displayed in the upper left corner of the monitor, pressing any button will not reset it to 0. If the above operation cannot reset it to 0, it means that the monitor is broken. Please contact customer service for replacement.
10	Monitor cannot record data	When riding, the upper left side of the monitor interface will display "STOP". If the Speed value does not change during riding, it means that the sensor line is broken; If the upper left side of the monitor interface does not display "STOP" during riding, and the Speed value does not change during riding, it means that the electronic meter is broken. Please contact customer service for replacement.
11	How to clear the data of the monitor	Press the "RESET" key to reset or turn off the device.
12	How to quickly increase the number on the monitor	Please press and hold the "SET" button on the monitor for more than 5 seconds to automatically add numbers, up to 999.
13	Can the specifications of the monitor be changed to m or km?	No, the monitor specifications for the United States and the United Kingdom are set to miles, and the monitor specifications for Europe and Australia are set to kilometers. If you receive the wrong electronic meter, please contact customer service for a replacement.
14	The handlebars are not adjustable	Please check whether the holes of the handlebars are aligned and installed, and whether the post can be adjusted up and down.

No.	Possible Problems	Solution
15	Uncomfortable seats	Adjust the comfortable angle for riding; if necessary, contact customer service to purchase a seat cushion cover for use.
16	The seat is loose and wobbly	Check whether the hexagonal nuts on both sides of the seat are tightened, and check whether the knobs of the rear plug are tightened.
17	The seat will slide	Check whether the nuts on both sides of the seat are locked, and check whether the knobs of the fixed sliding piece under the seat are locked to prevent the seat from loosening or moving while riding. If the nuts and knobs on both sides are locked but still move, please contact customer service for replacement.
18	How to adjust the direction of the seat	Loosen the screws on both sides of the seat, align the seat cushion with the armrest, and adjust the direction of the seat up and down. If you need a video, please contact customer service.
19	Resistance knob not working	Please send relevant pictures or videos to customer service for troubleshooting.
20	Missing parts	Please circle the missing parts in the manual and contact customer service for replacement.
21	Damaged parts	Please circle the damaged parts in the manual and contact customer service for replacement.

WARRANTY INFORMATION

Product Name	Wenoker Exercise Bike
Model	JC303
Default Warranty Period	12 Months
For your own reference, we strongly recommend that you record your order number and date of purchase.	
Date of Purchase	
Serial Number	

Terms & Policy

The Wenoker products are premium in material, craftsmanship, and service. Wenoker 1-year limited warranty is eective from the date of purchase.

Wenoker will replace defective products based on eligibility. Refunds are available to the original purchasers of our products within the first 30 days of purchase. This warranty extends only to personal use, doesn't apply to the commercial, rental, or any other uses for which the product is not intended for. There are no warranties other than the warranties expressly set forthwith each product.

This warranty is non-transferable. Wenoker is not responsible for any damages, losses or inconveniences caused by equipment's failure, user's negligence, user's abuse, or improper operation that does not follow the included user manual.

This warranty does not apply to the following situations:

- Damage due to abuse, accident, alteration or vandalism.
- Improper or inadequate maintenance.
- Damage in return transit.
- Unsupervised use by children under 18 years old.

Wenoker and its subsidiaries are only responsible for damages caused by the intended use or as instructed in the user manual. Some states do not allow this exclusion or limitation of incidental or consequential losses, so the above disclaimer may not apply to you. This warranty gives you specific legal rights and you may also have other rights, which may vary from state to state.

All expressed and implied warranties, including the warranty of merchantability, are limited to the period of the limited warranty.

WARRANTY INFORMATION

Additional 12-month Warranty:

You can enjoy an additional 12-month warranty. Just active your warranty by sending the product's model name your order number via **Wenokerservice@outlook**.com, to register your new product for the extended warranty.

Defective Products & Returns:

Should your product prove defective within the specified warranty period, please contact the Customer Support via **Wenokerservice@outlook**.com with your invoice and order number. **DO NOT** dispose of your product before contacting us. Once our Customer Support team has approved your request, please return the product with a copy of your invoice and order number.

Customer Support

Your satisfaction is our goal! Should you encounter any issues or have any questions about your new product, feel free to contact our Customer Support Team via **Wenokerservice@outlook.com**

*** Please have your Order ID and serial number (usually on the rear foot pipe) ready before contacting Customer Support.**

EC REP

Name: ONE VAT
Address: 229 RUE SAINT-HONORE , 75001 PARIS France
Contact Person: Younian YU
Tel: 0768391933
E-mail: onevat12332@outlook.com

UK REP

Company:
KOVA ASSOCIATES LTD
Address:
72a Kingston Road.Portsmouth, Hampshire,PO2 7PA, United Kingdom

Manufacturer: Jinhua jinchen sports equipment co.,Ltd

Address: Floor 1, Plant 3, NO.998, Jinsha Street, Linjiang Industrial Zone, Bailongqiao Town, Wucheng District 321000 Jinhua City, Zhejiang Province

Made in China