Owner's Manual & Safety Instructions

Save This Manual Keep this manual for the safety warnings and precautions, assembly, operating, inspection, maintenance and cleaning procedures. Write the product's serial number in the back of the manual (or month and year of purchase if product has no number). Keep this manual and the receipt in a safe and dry place for future reference. 22c

CENTRAL® MACHINERY

6 INCH CROSS SLIDE VISE

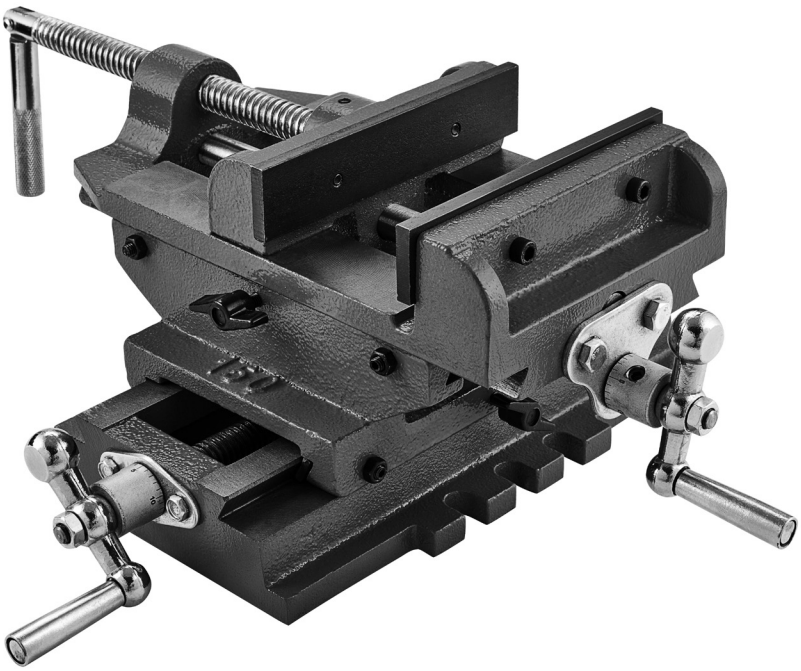

58977

Visit our website at: http://www.harborfreight.com
Email our technical support at: productsupport@harborfreight.com

When unpacking, make sure that the product is intact and undamaged. If any parts are missing or broken, please call 1-888-866-5797 as soon as possible.

Copyright© 2021 by Harbor Freight Tools®. All rights reserved.
No portion of this manual or any artwork contained herein may be reproduced in any shape or form without the express written consent of Harbor Freight Tools.
Diagrams within this manual may not be drawn proportionally. Due to continuing improvements, actual product may differ slightly from the product described herein.
Tools required for assembly and service may not be included.

⚠WARNING

Read this material before using this product.
Failure to do so can result in serious injury.
SAVE THIS MANUAL.

IMPORTANT SAFETY INFORMATION

⚠WARNING

Read all safety warnings and instructions.
Failure to follow the warnings and instructions may result in serious injury.
Save all warnings and instructions for future reference.

Setup Safety

1. **Mount this securely before use.** The forces exerted on this vise during use may cause a poorly mounted or unmounted vise or workpiece to come loose; causing SEVERE PERSONAL INJURY or property damage.
2. **Carefully follow all warnings and operation instructions, including accessory mounting instructions, provided with the equipment you will mount this vise on.**

Operation Safety

1. **Stay alert, watch what you are doing and use common sense when operating a tool. Do not use while you are tired or under the influence of drugs, alcohol or medication.** *A moment of inattention may result in serious personal injury.*
2. **Use personal protective equipment. Always wear ANSI-approved safety goggles.** Safety *equipment used for appropriate conditions will reduce personal injuries.*
3. **Dress properly. Do not wear loose clothing or jewelry. Keep your hair, clothing and gloves away from moving parts.** *Loose clothes, jewelry or long hair can be caught in moving parts.*
4. **Do not force the tool. Use the correct tool for your application.** *The correct tool will do the job better and safer at the rate for which it was designed.*
5. **Make sure that the equipment's bit does not come in contact with this vise.** Damage to the vise may damage the workpiece or cause a piece to fly off causing personal injury.
6. **This product is not a toy.** Keep it out of reach of children.

Maintenance and Storage Safety

1. **Store idle tools out of the reach of children and do not allow persons unfamiliar with the tool or these instructions to operate the power tool.** *Power tools are dangerous in the hands of untrained users.*
2. **Maintain tools. Check for misalignment or binding of moving parts, breakage of parts and any other condition that may affect the tool's operation. If damaged, have the tool repaired before use.** *Many accidents are caused by poorly maintained tools.*
3. **Maintain labels and nameplates on the tool.** These carry important safety information. If unreadable or missing, contact Harbor Freight Tools for a replacement.

⚠ SAVE THESE INSTRUCTIONS.

Specifications

Maximum Jaw Opening	6"
Cross Travel	7"
Throat Depth	1-5/8"
Jaw Width	6"
Longitudinal Travel	7-1/2"

Setup - Before Use:

Read the ENTIRE IMPORTANT SAFETY INFORMATION section at the beginning of this manual including all text under subheadings therein before set up or use of this product.

Note: For additional information regarding the parts listed in the following pages, refer to *PLEASE READ THE FOLLOWING CAREFULLY on page 6*.

Assembly

1. Place the Vise on a clear area of your workbench.
2. Slide Upper Handle onto the Upper Screw, rotating the handle until it fits onto the square end of screw.
3. Attach Nut and tighten with wrench.
4. Locate the Lower Handle and slide it onto the Lower Screw.
5. Attach Nut and tighten with wrench.

Mounting to a T-Slot Table (sold separately)

1. Place assembled Vise onto the T-Slot Table. Select the appropriate rows in the T-Slot Table which line up with the Mounting Tabs on the Base.
2. Insert 2 to 6 T-Slot mounting bolts (sold separately) into the T-Slot Table rails.
3. Thread nuts onto mounting bolts and tighten by hand.
4. Position the Vise again. Tighten mounting nuts firmly.

Functions

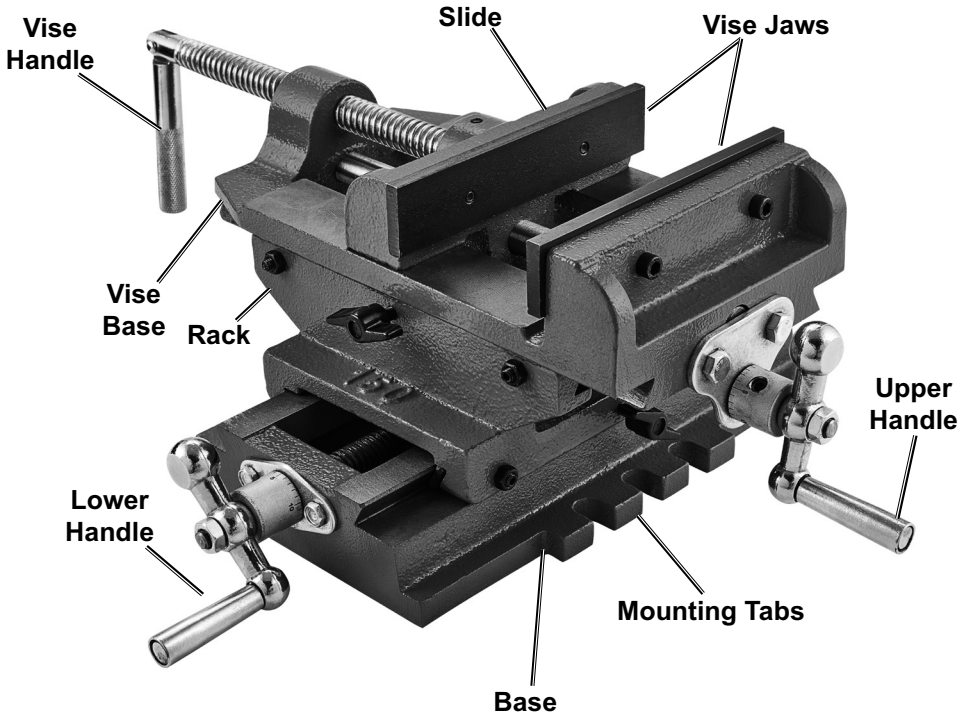

Read the ENTIRE IMPORTANT SAFETY INFORMATION section at the beginning of this manual including all text under subheadings therein before set up or use of this product.

Work Piece and Work Area Set Up

Designate a work area that is clean and well-lit. The work area must not allow access by children or pets to prevent distraction and injury.

Clamping

1. Center the Vise before clamping anything. This will allow maximum adjustment flexibility in every direction.
2. Turn the Vise Handle to open jaws.
3. Insert the material to be clamped. If material is small, place it over one of the runners of the Base. This will keep the material from falling below into the Vise.
4. Begin to close the Slide by turning the Vise Handle. This will tighten the jaws.
5. When the Slide touches the material you are working on, tighten slide only enough to ensure clamping. DO NOT CRUSH the material you are working on.

Cross Sliding the Vise

Note: Determine the position of the Vise that will give you the safest and best access to the clamped material.

1. To adjust the longitudinal (fore/aft) axis of the Vise, locate Lower Screw and Lower Handle.
2. Turn Handle counterclockwise to move the Rack and Vise Base further towards the rear of the Base.
3. Turn Handle clockwise to move the Rack and Vise Base closer to the handle. Position for best access.
4. To adjust the cross travel (side to side) axis of the Vise, locate the Upper Screw and Upper Handle.
5. Turn Handle clockwise to move the Vise Base to the left.
6. Turn the Handle counterclockwise to move the Vise Base to the right. Position for best access. Turn the Handles on the Lock Screw to hold the workpiece in place. The unit is calibrated to eight turns per inch (1/8″ per turn).

Maintenance and Servicing

Procedures not specifically explained in this manual must be performed only by a qualified technician.

⚠CAUTION

TO PREVENT INJURY FROM TOOL FAILURE:
Do not use damaged equipment. If damaged or loose parts are noted, have the problem corrected before further use.

1. **BEFORE EACH USE,** inspect the general condition of the tool. Check for loose hardware, misalignment or binding of moving parts, cracked or broken parts, and any other condition that may affect its safe operation.
2. **AFTER USE,** wipe external surfaces of the tool with clean cloth.
3. Keep the moving parts oiled, being sure to wipe off any excess oil off of the Handle and Jaws.
4. Check and tighten the mounting screws to be sure the Vise is secure.
5. **Replacing a Jaw Plate:**
   a. Unscrew the Screws holding the Jaw and set aside.
   b. Replace with a new Jaw and secure in place with the Screws. Tighten.
   c. Repeat on the other Jaws if necessary.

Record Serial Number Here: _____

Note: If product has no serial number, record month and year of purchase instead.

Note: Some parts are listed and shown for illustration purposes only, and are not available individually as replacement parts. Specify number when ordering.193175452498.

PLEASE READ THE FOLLOWING CAREFULLY

THE MANUFACTURER AND/OR DISTRIBUTOR HAS PROVIDED THE PARTS LIST AND ASSEMBLY DIAGRAM IN THIS DOCUMENT AS A REFERENCE TOOL ONLY. NEITHER THE MANUFACTURER OR DISTRIBUTOR MAKES ANY REPRESENTATION OR WARRANTY OF ANY KIND TO THE BUYER THAT HE OR SHE IS QUALIFIED TO MAKE ANY REPAIRS TO THE PRODUCT, OR THAT HE OR SHE IS QUALIFIED TO REPLACE ANY PARTS OF THE PRODUCT. IN FACT, THE MANUFACTURER AND/OR DISTRIBUTOR EXPRESSLY STATES THAT ALL REPAIRS AND PARTS REPLACEMENTS SHOULD BE UNDERTAKEN BY CERTIFIED AND LICENSED TECHNICIANS, AND NOT BY THE BUYER. THE BUYER ASSUMES ALL RISK AND LIABILITY ARISING OUT OF HIS OR HER REPAIRS TO THE ORIGINAL PRODUCT OR REPLACEMENT PARTS THERETO, OR ARISING OUT OF HIS OR HER INSTALLATION OF REPLACEMENT PARTS THERETO.

Parts List and Diagram

Part	Description	Qty
1	Handle	2
2	Nut M8	2
3	Bushing	1
4	Screw M8x6	3
5	Bracket	1
6	Bolt M6x16	2
7	Spring Washer 6mm	2
8	Lead Screw	1
9	Base	1
10	Bushing	1
11	Bracket	1
12	Lead Screw	1
13	Nut	2
14	Gib	2

Part	Description	Qty
15	Screw M6 x 25	4
16	Nut M6	4
17	Central Slide Bar	1
18	Mid Base	1
19	Lock Screw M6 x 20	4
20	Upper Base	1
21	Lead Screw	1
22	Jaw Plate	2
23	Slide	1
24	Screw M6 x 13	1
25	Bolt M8 x 15	2
26	Spring Washer 8mm	2
27	Screw	2

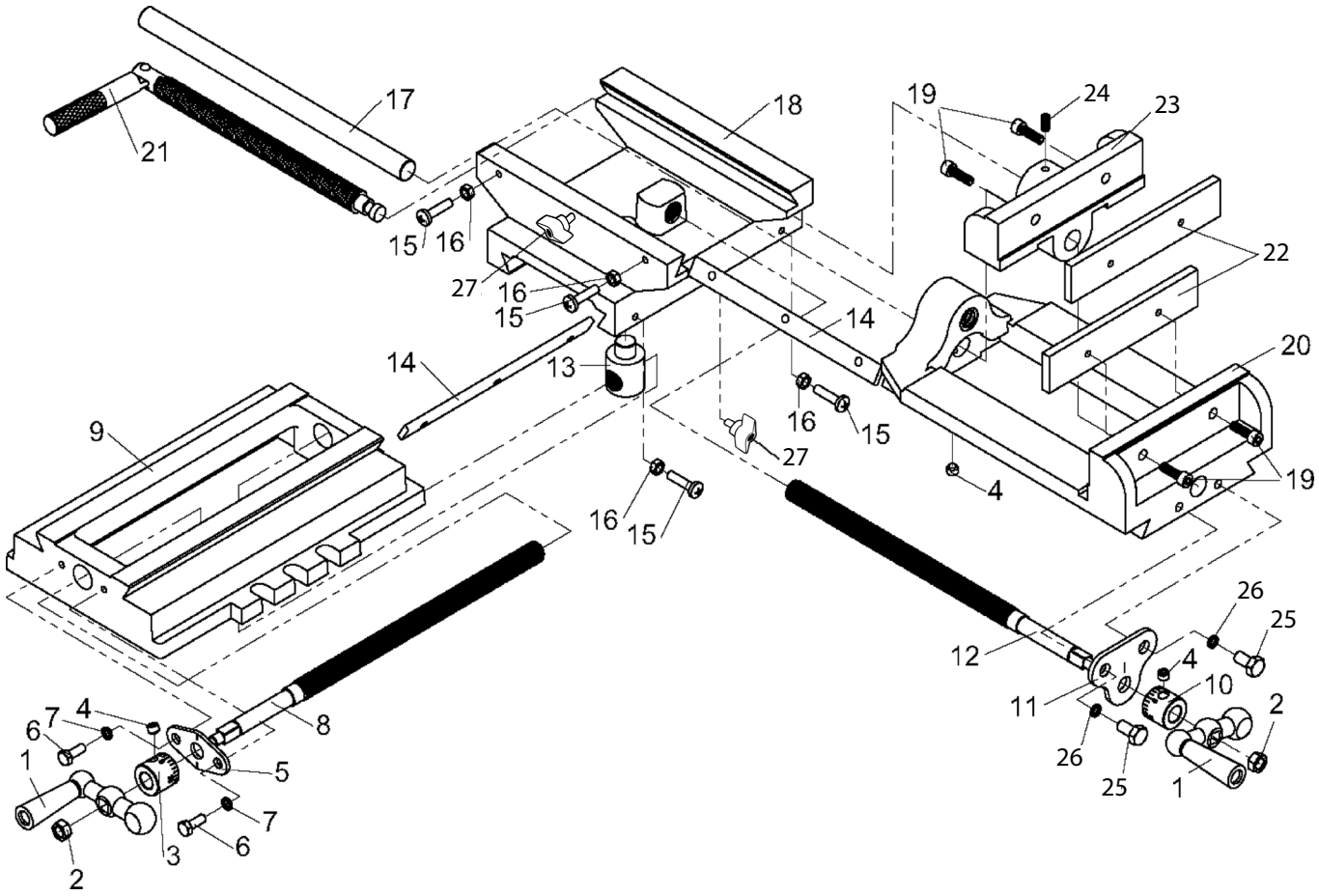

Limited 90 Day Warranty

Harbor Freight Tools Co. makes every effort to assure that its products meet high quality and durability standards, and warrants to the original purchaser that this product is free from defects in materials and workmanship for the period of 90 days from the date of purchase. This warranty does not apply to damage due directly or indirectly, to misuse, abuse, negligence or accidents, repairs or alterations outside our facilities, criminal activity, improper installation, normal wear and tear, or to lack of maintenance. We shall in no event be liable for death, injuries to persons or property, or for incidental, contingent, special or consequential damages arising from the use of our product. Some states do not allow the exclusion or limitation of incidental or consequential damages, so the above limitation of exclusion may not apply to you. THIS WARRANTY IS EXPRESSLY IN LIEU OF ALL OTHER WARRANTIES, EXPRESS OR IMPLIED, INCLUDING THE WARRANTIES OF MERCHANTABILITY AND FITNESS.

To take advantage of this warranty, the product or part must be returned to us with transportation charges prepaid. Proof of purchase date and an explanation of the complaint must accompany the merchandise. If our inspection verifies the defect, we will either repair or replace the product at our election or we may elect to refund the purchase price if we cannot readily and quickly provide you with a replacement. We will return repaired products at our expense, but if we determine there is no defect, or that the defect resulted from causes not within the scope of our warranty, then you must bear the cost of returning the product.

This warranty gives you specific legal rights and you may also have other rights which vary from state to state.

CENTRAL®
MACHINERY

26677 Agoura Road • Calabasas, CA 91302 • 1-888-866-5797