HiBOOST® Boost Your Bars

User Manual

For Vehicle

Travel 3.0 ExplorerX

Model: C30G-5S-BTW.EX

HVIN: C30G-5S-BTW-EX

Travel 3.0 Truck

Model: C30G-5S-BTW.TRUCK

HVIN: C30G-5S-BTW-TRUCK

3150 Premier Drive,Suite 130,
Irving, TX 75063
(972) 870-5666
support@hiboost.com
www.hiboost.com

CONTENTS

Package Contents 01

Introduction 03

App Introduction 04

How HiBoost Booster Works 05

App Assisted Installation 07

Installation Guide Travel 3.0 ExplorerX 11

Installation Guide Travel 3.0 Truck 15

Troubleshooting Guide 20

Technical Specifications 21

FCC and IC Statements 22

Return and Warranty Policies 25

Package Contents

Travel 3.0 ExplorerX

Booster

Outside Omni-Directional Antenna

Inside Panel Antenna

Outside 15ft Cable

DC Power Supply

Mounting Accessories

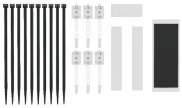

Additional Installation Accessories

Folding Mount Bracket

Note: The Travel 3.0 ExplorerX is designed for all types of off-road vehicles, including Jeeps, SUVs, ATVs, UTVs, and dune buggies.

Package Contents

Travel 3.0 Truck

Booster

Outside Omni-Directional Antenna

Inside Panel Antenna

Outside 15ft Cable

DC Power Supply

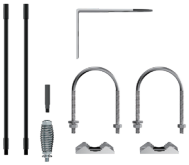

Mounting Accessories:
15.74-inch pole (x2), Side-Exit Adapter for Cable, Spring & Brackets

Additional Installation Accessories

Note: Additional accessories can be purchased through HiBoost.com

Warning: Unauthorized antennas, cables, and/or coupling devices are prohibited by new FCC rules, Please contact FCC for details: 1(888)-CALL-FCC.

Note: The Travel 3.0 Truck is ideal for vehicles like pickup trucks delivery vans, semi-trucks, and cargo vans.

Introduction

Thank you for purchasing the HiBoost cell phone booster.The HiBoost vehicle series is a collection of precision-engineered products that improve cellular reception inside of vehicles by amplifying incoming and outgoing cell phone signals.

HiBoost cell booster's exclusive cloud-based Signal Supervisor mobile application and LED indicator allows users to monitor the live status of HiBoost cell phone signal boosters directly from the LED indicator or remotely from a mobile device anywhere, at any time.

If there are any issues while installing a HiBoost cell phone signal booster, please contact the HiBoost technical support team through the following options :

Create a ticket or chat via SignalSupervisor app

(972) 870-5666 (M-F from 9 am – 5 pm CST)

support@hiboost.com

www.hiboost.com

App Introduction

The SignalSupervisor app enables users to view supported frequency bands and their amplified power data (gain), ensuring optimal booster configuration.It also offers installation assistance for quick and accurate setup of the signal booster.

1.1 App Functions

Remote Monitoring: View device status in real-time and remotely switch frequency bands.

Installation Assistance: Maximize device effectiveness by adjusting indoor and outdoor antennas based on output power changes.

Online Technical Support: Seek technical assistance from customer service via work orders or online chat.

Community Interaction: Share user experiences, post product reviews, and engage in interest group discussions.

Documentation Access: Access product specifications and installation videos for corresponding products (excluding industrial products).

1.2 Device Details

On the device details page of the app, users can view the supported frequency bands, gain, output power parameters, and check the device's usage status.

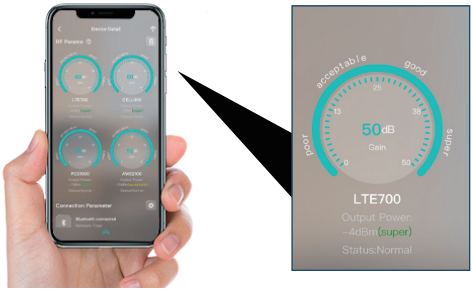

Note： The SignalSupervisor app strictly protects user privacy and does not collect any personal information. It is solely used for viewing device status, assisting with installation, and obtaining technical support, without accessing any personal information from users, ensuring the security and confidentiality of user data.

Gain: Refers to the degree to which the device amplifies the signal. The higher the gain, the better the signal transmission distance and quality.

Output Power: Refers to the size of the signal coverage area. The higher the output power, the greater the coverage area and signal strength.

LTE700: This refers to the frequency band used by the repeater station. For more details, please refer to the table on page 8.

Coverage Performance: In the app, “Super" indicates that the current repeater station's coverage performance is satisfactory, with a strong and stable signal; “Good " indicates that the coverage performance is somewhat lacking and may require adjustment or optimization to improve signal quality.

How HiBoost Booster Works

Travel 3.0 ExplorerX

1 Outside Antenna
Receives cellular signal from nearby cell towers and sends it to the booster.

2 Booster
Amplifies and sends the signal to the inside antenna.

3 Inside Antenna
Broadcasts the amplified signal to users in the vehicle.

4 Power Supply
Powers the ExplorerX cell phone booster.

5 Folding Mount Bracket
Helps users adjust and stabilize the position of the outdoor antenna.

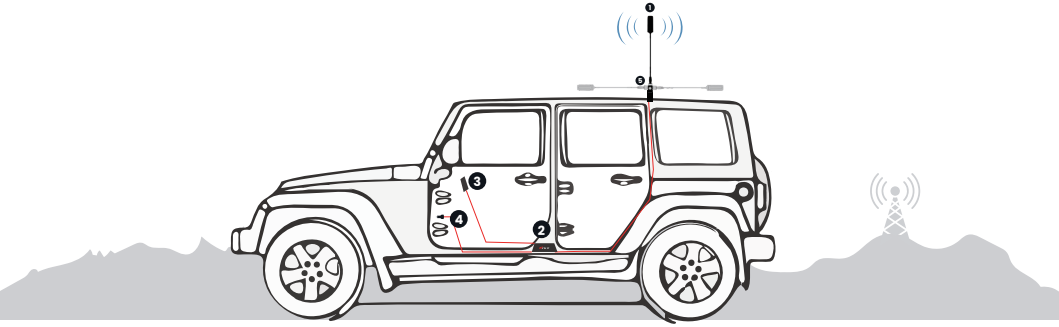

NOTE: The system will only operate at full capacity when the antenna is in the vertical position.

Travel 3.0 Truck

1 Outside Antenna
Receives cellular signal from nearby cell towers and sends it to the booster.

2 Booster
Amplifies and sends the signal to the inside antenna.

3 Inside Antenna
Broadcasts the amplified signal to users in the vehicle.

4 Power Supply
Powers the Travel 3.0 Truck cell phone booster.

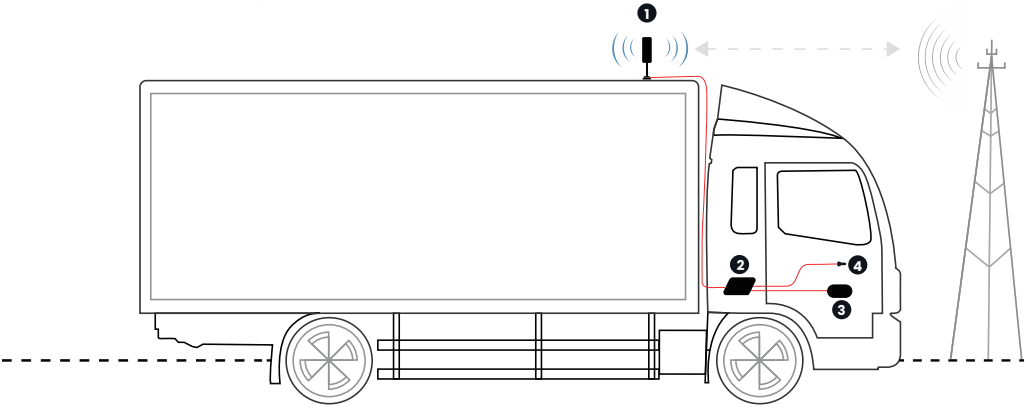

Note: The indoor antenna installation location shown in the image is for reference only. During actual installation, the indoor antenna must be installed at least 0.2 m (20 cm) away from any person.

Notes on how to maintain maximum booster gain

It is important to avoid self-oscillation between the outside and inside antennas.

Measures can be taken to avoid self-oscillation:
1) Increase the distance between outside and inside antennas, generally the same vertical distance generates more loss than horizontal distance.
2) Use barriers between outside and inside antennas.

Here are some good and bad examples for your reference.

Please note: This separation is not a strict requirement, however, it is recommended that you isolate the outdoor antenna from the indoor antenna as much as possible. The more insolation the antennas have, the less signal interference you will experience, leading to an optimally boosted signal.

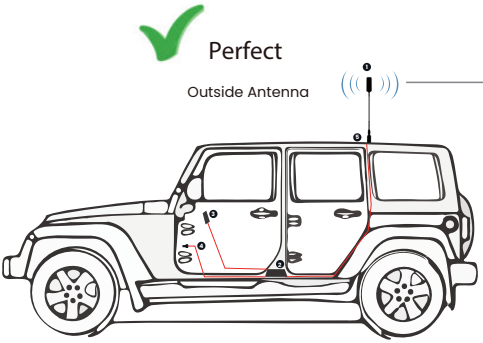

1. Outside antenna located at highest position.
2. Enough vertical and horizontal distance between outside and inside antennas.
3. Inside antenna is close to demanded coverage area.

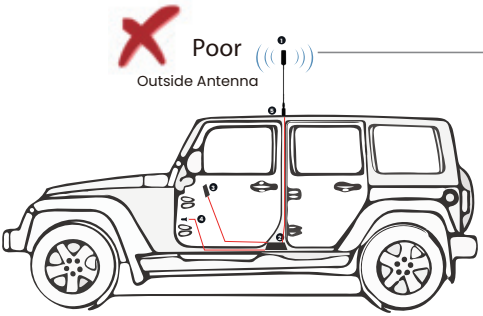

1. Not enough horizontal and vertical distance between outside and inside antennas.

App Assisted Installation

Flow Chart of App Assisted Installation

1. Signal Detection Before Installation
2. Installation Guide Travel 3.0 ExplorerX / Truck
3. Signal Detection After Installation

Signal Detection Before Installation

Third–party App

You can use third-party software to check the signal strength, supported frequency bands, and other relevant information in your location, helping to confirm whether the environment is suitable and if the signal repeater can be used effectively.

Network Cell Info Lite　　Note：Only supported for Android

OpenSignal　　Note：Support for Android and iPhone

Testing Methods of Frequency Band

For iPhone

1. Dial *3001#12345#* then press call button
2. Choose All Metrics,Click Serving Cell Info
3. Check Band Info

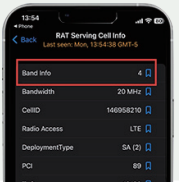

For Android phone

1. Download "Network Cell Info Lite"
2. Choose"GAUGE"
3. Check"BAND"

Bands contained in the Gauges on SignalSupervisor

Gauge	Band	Uplink	Downlink
LTE700	12/17	698-716MHz	728-746MHz
	FCC 13	776-787MHz	746-757MHz
	ISED 13	777-787MHz	746-756MHz
CELL800	5	824-849MHz	869-894MHz
PCS1900	25/2	1850-1915MHz	1930-1995MHz
AWS2100	4	1710-1755MHz	2110-2155MHz

Please focus on the gauge that contains the band you are using.

Step 1: Download Your Preferred Third-party App

Using a third-party app allows us to:

- Find a suitable site to install the booster
- Test the signal strength and quality

There are a variety of resources available online: Opensignal,Cell mapper, Network cell info lite, etc.

Please download them beforehand over Android and / or iOS:

You can use whichever third-party app that you prefer. Please download the app of your choice before installing the booster. In the following instructions, we will show examples of how using the Network Cell Info Lite app will help with proper installation of the booster.

Step 2: Select the installation site

Drive to an area with an outside signal below -85dBm.
The Network Cell Info Lite app will show you your signal as you move around, enabling you to find this area.
Reasons why a signal strength of less than -85dBm is required:

1) The correct outside signal will create a clean environment for installing the booster and allow for adjustments that will result in the maximum gain. For example, an outside signal that is too strong (ex. -40dBm) will reduce the working gain.
2) An area with the correct signal allows the user to test the performance after the booster has been installed.

" Network Cell Info Lite " allows users to measure the signal strength before and after installation, as it shows signal levels. Unfortunately, it is only available for Android devices.

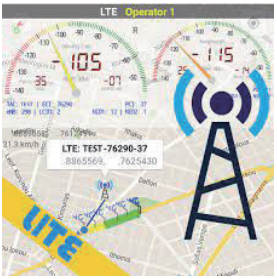

Network Cell Info Lite

The signal strength requested by the booster system is as below.

SIGNAL STRENGTH	EXCELLENT	GOOD	FAIR	POOR	DEAD ZONE
3G/1X	-70dBm	-70 to -85dBM	-86 to -100dBM	-101 to -109dBM	-101dBM
4G/ LTE	-90dBm	-90 to -105dBm	-106 to -110dBm	-111 to -119dBm	-120dBm

Signal strength doesn't affect whether you can make a phone call or not. However, improved signal strength will affect the quality of the phone call, enabling users to hear each other clearly.

The reason to test your internet speed is to make sure you'll be able to stream high-bandwidth movies, like those from Netflix, Hulu, Amazon, and other providers. If your internet speed is too slow, you'll get choppy video or regular buffering.

Installation Video For ExplorerX

Step 1 Assemble and Mount the Outside Antenna

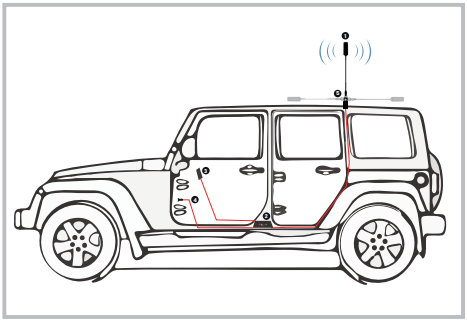

1.1 Determine where you would like to set up the outside antenna

Usually, the outside antenna is mounted to a rearview mirror. The outside antenna works best when it is mounted as high as possible.

Note: Please ensure the outside antenna is below the height limit allowed by law.

1.2 Assemble the outside antenna

1) Insert the cable through the pole and then through the side exit adapter.

2) Screw into place.

Note: Be sure to place a washer between the spring and folding mount bracket.

1.3 Install the folding mount bracket

Lift the locking lever to release the internal lock.Rotate the antenna to 90° 180°.The locking lever automatically springs back to secure the bracket. This flexibility facilitates the installation of the outside antenna on different types of off-road vehicles.

1.4 Pole Installation

Brackets, fittings, and a non-skid rubber pad are additionally provided to fasten the folding mounting bracket onto poles ranging from 1.0 to 1.25 inches in diameter.

Note: You can use a silicone pad in the middle of the bracket to increase the slip resistance.

1.4.1 Pole Installation in Folded Down Position

The stabilizer arm can be attached to poles using zip ties for secure fastening.

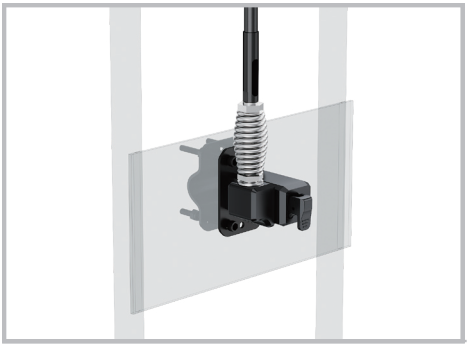

1.5 Fixed Installation

The folding mounting bracket can also be affixed to a flat surface using the included hardware, as demonstrated here.

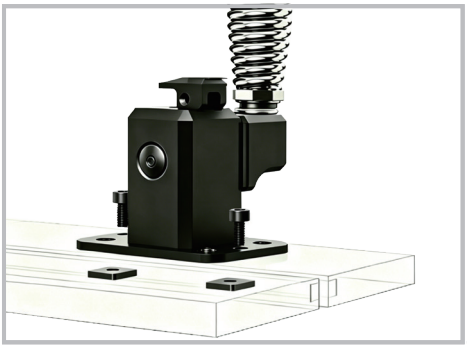

1.6 Installation intoT-Track

For vehicles with T-track roof rack systems,the included mounting bracket can beattached to the roof rack. Use the T-trackmounting hardware to secure the bracket tothe roof rack, and then attach theassembled outdoor antenna.

Note: Some T-track roof rack systems might not becompatible with the provided channel nuts.M6channel nuts might be necessary to complete theinstallation.

Step 2 Connect the Cable to the Outside Antenna

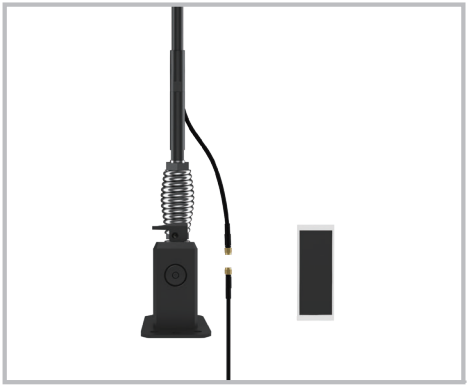

Connect the booster and the outside antenna with the 15′ cable.

Step 3 Connect the DC Power Supply to the Booster

Step 4 Download the Signal Supervisor App, register ID and booster

Register an ID first and log in.
Add the booster to the device list.

Step 5 Place Inside Antenna & Connect the Cable

Please place the inside antenna on the dash or the side of driver's seat.

Use the SignalSupervisor app

The booster works best if the gain reaches **50 dB**. Try to ensure the gain on the app gauges is within **46-50 dB**. If you are below this range, please adjust the position of the inside antenna.

Step 6 Fix the Inside Antenna and the Booster

Fix the inside antenna with the provided double-side tape.
NOTE : Do not install the indoor antenna on or near the airbag.

Fix the booster with the provided Hook & Loop.
Enjoy your boosted signal!

Installation Video For Truck3.0

Step 1 Assemble and Mount the Outside Antenna

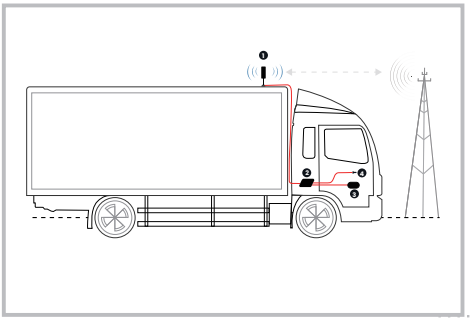

1.1 Determine where you would like to set up the outside antenna

Usually, the outside antenna is mounted to a rearview mirror. The outside antenna works best when it is mounted as high as possible.

Note: Please ensure the outside antenna is below the height limit allowed by law.

1.2 Assemble the outside antenna

1) Insert the cable through the pole and then through the side exit adapter.
2) Screw into place.

Notes:
1) The accessories include 2 poles and you can decide to use 1 or 2 depending on the situation.

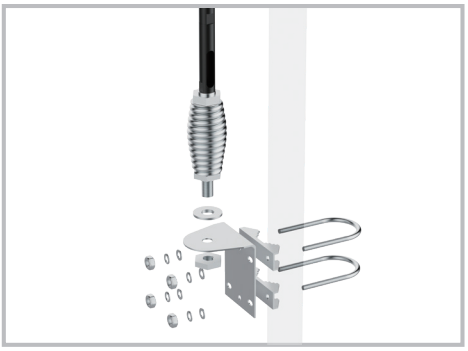

1.3 Fix the outside antenna

Use the provided accessories to fix the outside antenna to the side mirror.

Step 2 Connect the Cable to the Outside Antenna

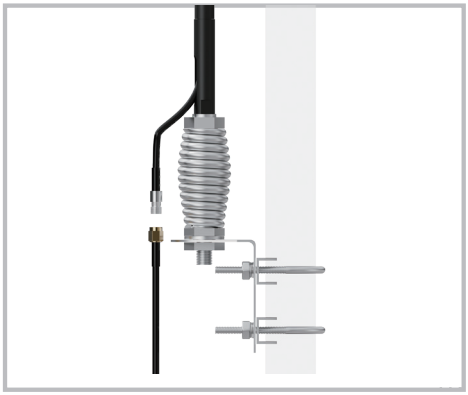

Connect the booster and the outside antenna with the 15′ cable.

Step 3 Connect the DC Power Supply to the Booster

Step 4 Download the Signal Supervisor App, register ID and booster

Register an ID first and log in.
Add the booster to the device list.

Step 5 Place Inside Antenna & Connect the Cable

Please place the inside antenna on the dash or the side of driver's seat.

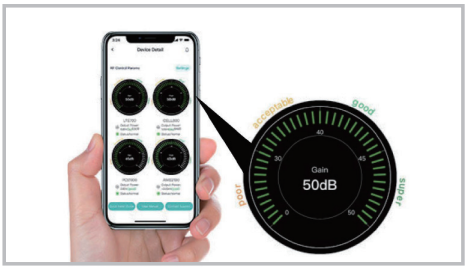

Use the SignalSupervisor app

The booster works best if the gain reaches **50 dB**. Try to ensure the gain on the app gauges is within **46-50 dB**. If you are below this range, please adjust the position of the inside antenna.

Step 6 Fix the Inside Antenna and the Booster

Fix the inside antenna with the provided double-side tape.
NOTE : Do not install the indoor antenna on or near the airbag.

Fix the booster with the provided Hook & Loop.
Enjoy your boosted signal!

Signal Detection After Installation

Step 1: Signal quality test

After reaching the MAX possible gain (50dB or as close to 50dB as possible), attach the outside & inside antennas, then use your device to test phone call and web browsing capabilities with the third-party app Network Cell Info Lite or OpenSignal.

*Notes Again: Just remember that strength and quality are two separate issues. A poor quality "strong" signal can be next to useless, but a clean signal of two bars might be all your device needs.

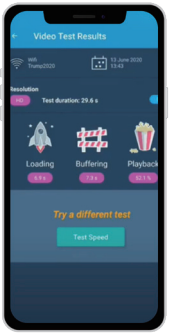

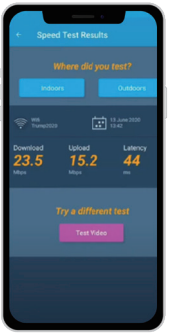

If the signal quality not ideal, adjust the position of inside or outside antennas, and in the meantime ensure that the gain remains as high as possible.

When it reaches the ideal test value, the booster, antenna and cable can be firmly installed.

The installation order is: Outside antenna – Inside antenna – Booster.

Note: Please don't expect the vehicle booster system to be at ideal signal strength in all areas. The booster gain is limited to 50 dB by the FCC. In addition, the outside signal is changing at all times while driving, affecting booster gain.

Step 2: Drive the vehicle to other places to see how it works

Drive the vehicle to various weak areas to test the performance.
Drive the vehicle to various strong areas to test the performance.

Additional Tips

If you travel to an area where the signal is particularly weak and the device cannot be used, press the inside antenna against the back of the device. This may allow a signal to be obtained. This is not a normal way to use the booster, but it can help you maintain communication in areas with exceptionally weak signals.

However, this will not help if there is no signal present, or if the signal is extremely weak. The booster must have a signal to boost.

Troubleshooting Guide

LED STATUS INDICATORS		
Alarm(ISO) LED	Solid blue	Normal
	1s flashing blue	Slight self-oscillation
	0.5s flashing blue	Self-oscillation
	Solid red	Input voltage is not enough
Bluetooth LED	Solid blue	Bluetooth disconnected
	1s flashing blue	Bluetooth connected
Wi-Fi LED	Solid blue	Wifi disconnected
	1s flashing blue	Wifi connected

Common Issues	Troubleshooting Instructions
The vehicle booster is installed but there's still no signal	Check to see if the vehicle is started. Double check connections to make sure none are loose.
The signal is not stable after turning on the booster power	Check that the outside signal is stable by referring to your mobile device and checking your coverage.
The Alarm LED is quick flashing blue or red	Check to make sure vehicle is not parked too close to a cell tower.Ensure indoor and outdoor antenna isolation.
The Alarm LED is solid red	Input voltage is too low(≤10V)/too high(16V~20V)
There is No Power	Check that the booster is turned on and the DC power outlet is plugged into the DC 12V port or lighter adapter.

If there are any issues while installing a HiBoost cell phone signal booster, please contact the technical support team through the following channels:

Create a ticket or chat via SignalSupervisor app

(972) 870-5666 (M-F from 9 am – 5 pm CST)

support@hiboost.com

www.hiboost.com

Technical Specifications

RF Parameter		Uplink	Downlink
Frequency Range	LTE(A+B)	698-716MHz	728-746MHz
	FCC LTE(C)	776-787MHz	746-757MHz
	ISED LTE(C)	777-787MHz	746-756MHz
	CDMA	824-849MHz	869-894MHz
	PCS	1850-1915MHz	1930-1995MHz
	AWS	1710-1755MHz	2110-2155MHz
Max. Gain		50dB	
Max. Power		22 dBm	
Electrical Parameter			
Power Supply		Input DC 9~36V, Output DC 9~36/3A	
Input Impedance		50 ohms	
Mechanical Parameter			
I/O Port Type		SMA-F & RPSMA-M	
Environment Parameter			
Operating Temperature		-10°C~+55°C	
Storage Temperature		-10°C~+80°C	
Environment Conditions		IP40	

Authorized Accessories List

Component	Type / Specification	Gain/Loss				
		Band 12/17	Band 13	Band 5	Band 25/2	Band 4
Outdoor Antenna	Omni Antenna	2 dBi	2 dBi	2 dBi	5 dBi	4 dBi
	Magnetic Antenna	-2 dBi	-1.5 dBi	-1 dBi	0 dBi	0 dBi
	NMO Antenna	-1.5 dBi	-1.5 dBi	-1 dBi	1 dBi	0 dBi
Outdoor Cable	3D 26 ft cable	2.30 dB	2.38 dB	2.51 dB	3.84 dB	3.68 dB
	3D 15 ft cable	1.33 dB	1.37 dB	1.45 dB	2.22 dB	2.12 dB
	3D 13.1 ft cable	1.16 dB	1.20 dB	1.26 dB	1.85 dB	1.93 dB
	3D 6.6 ft cable	0.58 dB	0.60 dB	0.64 dB	0.93 dB	0.97 dB
Indoor Antenna	Magnetic Antenna	-2 dBi	-1.5 dBi	-1 dBi	0 dBi	0 dBi
	Panel Antenna	-2 dBi	-1.5 dBi	-1 dBi	0 dBi	0 dBi
Bluetooth/WiFi Antenna	Type / Specification	Gain				
		2400-2500MHz				
	Magnetic Antenna	1.5 dBi				
	Pamel Antenna	1.5 dBi				

Note: Unauthorized use of accessories (power supplies, antennas, cables, etc.) is strictly prohibited.

FCC RF EXPOSURE STATEMENT

This equipment complies with FCC radiation exposure limits set forth for an uncontrolled environment. End users must follow the specific operating instruction for satisfying RF exposure compliance. This transmitter must not be co-located or operating in conjunction with any other antenna or transmitter.

This equipment should be installed and operated with minimum distance 20cm between the radiator& your body.

FCC Warning

This device complies with part 15 of the FCC Rules. Operation is subject to the following two conditions:

(1) This device may not cause harmful interference, and
(2) this device must accept any interference received, including interference that may cause undesired operation.

IC RF EXPOSURE STATEMENT

The device is compliance with RF exposure limits. The minimum distance from body to use the device is 20 CM.

Le présent appareil est conforme aux conformité ou aux limites d'inten-sité de champ RF. La distance minimale du corps à utiliser le dispositif est de 20 CM.

ISED Warning

This device complies with Innovation, Science, and Economic Development Canada licence-exempt RSS standard(s). Operation is subject to the following two conditions:

(1) this device may not cause interference, and
(2) this device must accept any interference, including interference that may cause undesired operation of the device.

Le présent appareil est conforme aux CNR d' Innovation, Sciences et Dével-oppement économique Canada applicables aux appareils radio exempts de licence. L'exploitation est autorisée aux deux conditions suivantes :

(1) l'appareil nedoit pas produire de brouillage, et
(2) l'utilisateur de l'appareil doit accepter tout brouillage radioélectrique subi, même si le brouillage est susceptible d'en compromettre le fonctionnement.

This equipment has been tested and found to comply with the limits for a Class B digital device, pursuant to part 15 of the FCC Rules. These limits are designed to provide reasonable protection against harmful interference in a residential installation. This equipment generates, uses and can radiate radio frequency energy and, if not installed and used in accordance with the instructions, may cause harmful interference to radio communications. However, there is no guarantee that interference will not occur in a particular installation. If this equipment does cause harmful interference to radio or television reception, which can be determined by turning the equipment off and on, the user is encouraged to try to correct the interference by one or more of the following measures:

- Re-orient or relocate the receiving antenna.
- Increase the separation between the equipment and receiver
- Connect the equipment into an outlet on a circuit different from that to which the receiver is connected
- Consult the dealer or an experienced radio/TV technician for help

Changes or modifications not expressly approved by HiBoost could void the user's authority to operate the equipment. For a complete list of antennas and cables approved for use with these boosters see Authorized Kitting Options

FURTHER INFORMATION ON SIGNAL BOOSTER END-USE REGISTRATION
The following links are the currently active contacts for booster registration with U.S. wireless providers:
https://www.uscellular.com/uscellular/support/fcc-booster-registration.jsp https://www.sprint.com/legal/fcc_boosters.html https://www.verizonwireless.com/solutions-and-services/accessories/register-signal-booster/ https://support.t-mobile.com/docs/DOC-9827 https://securec45.securewebsession.com/att-signalbooster.com/

IC Statement: This device complies with Innovation, Science and Economic Development Canada ICES-003 Compliance Label: CAN ICES-3 (B)/ NMB-3(B). Le présent appareil est conforme Innovation, science et développement économique Canada ICES-003 Étiquette de conformité: CAN ICES-3 (B) / NMB-3 (B).
Please follow the link to access the CPC-2-1-05:
http://www.ic.gc.ca/eic/site/smt-gst.nsf/eng/sf08942.html

This is a CONSUMER device.

BEFORE USE, you MUST REGISTER THIS DEVICE with your wireless provider and have your provider's consent. Most wireless providers consent to the use of signal boosters. Some providers may not consent to the use of this device on their network.If you are unsure, contact your provider.

In Canada, BEFORE USE, you must meet all requirements set out in ISED CPC-2-1-05.

You MUST operate this device with approved antennas and cables as specified by the manufacturer. Antennas MUST be installed least 20 cm(8 inches)from (i. e..MUST NOT be installed within 20 cm of) any person.

You MUST cease operating this device immediately if requested by the FCC (or ISED in Canada) or a licensed wireless service provider.

WARNING. E911 location information may not be provided or may be inaccurate for calls served by using this device.

The booster incorporates the following safeguard features to prevent harmful interference and ensure compliance with the FCC Network Protection Standard (NPS):

Anti-Oscillation: The booster detects oscillation and automatically reduces gain or shuts down the affected power amplifier to prevent harmful interference.

Noise-Power Limiting: The booster monitors RF noise/output power and automatically adjusts the gain or shuts down the power amplifier when the applicable noise or power limit is exceeded.

Gain/Power Self-Monitoring: The booster continuously monitors RF operating conditions and automatically adjusts or shuts down the device when the applicable limits are exceeded.

Detailed technical implementation and control parameters are provided in the relevant sections of this Operational Description.

Return and Warranty Policies

30-Day Money-Back Guarantee: If for any reason the performance of any product is not acceptable, the product may be returned to the reseller within 30-days with proof of purchase. Please contact the customer support team.

3-Year Warranty: Signal boosters and kits are warrantied for 3 years. We will repair or replace the unit and will cover the cost of delivery back to consumers located within the continental US and Canada. We will only cover shipping to our office if the booster was delivered to you recently, and was delivered defective. Damage caused by the use of non-company power supplies or other accessories is not covered under warranty.

Customers can choose to return the signal boosters and kits directly to the manufacturer at the purchaser's expense with a dated proof of purchase and a Returned Material Authorization (RMA) number supplied by us. RMA numbers may be obtained by contacting customer support at 972-870- 5666 or support @hiboost.com

This warranty does not apply to any signal boosters or kits determined by us to have been subjected to tampering, misuse, abuse, neglect, or mishandling that alters or damages physical or electronic properties.

We are not liable for any SignalSupervisor application network connectivity issues. The cell phone signal booster relies on a strong, continuous and reliable connection to the internet in order to communicate with the cell phone application. For all SignalSupervisor application related issues, please check your network strength and call our technical support.

Failure to use a surge-protected AC power strip with at least a 1000 Joule rating will void your warranty. Damage caused by lightning is not covered by this warranty.

All of the products that are packaged with other accessory products are intended for resale and used as a single integrated system. Such product kits are required to be sold to the end-users or subsequent reseller as packaged.