NordicTrack®

ADJUSTABLE BENCH

nordictrack.com

Model No. NTBE19.1
Serial No. _____

Write the serial number in the space above for reference.

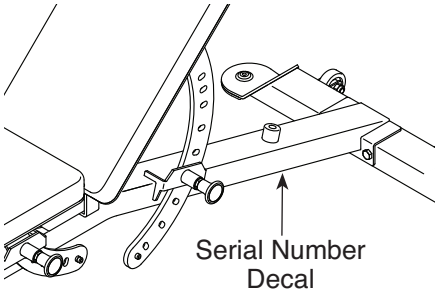

REGISTER YOUR PRODUCT

To register your product and activate your warranty today, go to my.nordictrack.com.

CUSTOMER CARE

For service at any time, go to support.nordictrack.com.

Or call 1-800-TO-BE-FIT
(1-800-862-3348)
Mon.–Fri. 6 a.m.–6 p.m. MT
Sat. 8 a.m.–12 p.m. MT

Please do not contact the store.

⚠CAUTION

Read all precautions and instructions in this manual before using this equipment. Keep this manual for future reference.

USER'S MANUAL

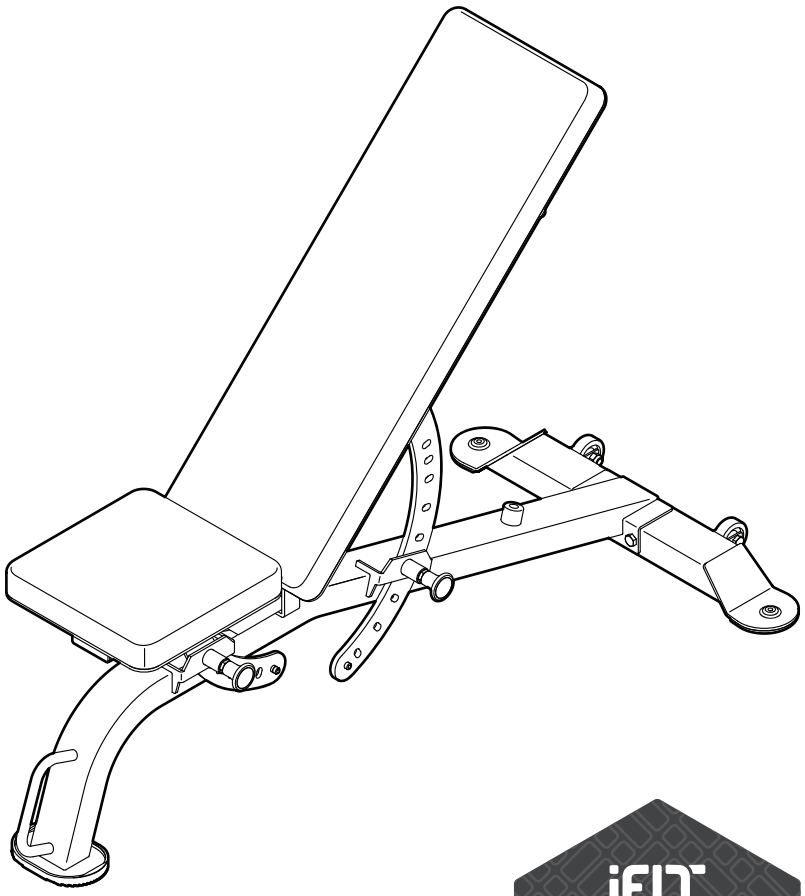

iFIT
MAKE YOUR FITNESS GOALS A REALITY
IFIT.COM

TABLE OF CONTENTS

WARNING DECAL PLACEMENT 2
IMPORTANT PRECAUTIONS 3
BEFORE YOU BEGIN 4
PART IDENTIFICATION CHART 5
ASSEMBLY 6
ADJUSTMENT 10
EXERCISE GUIDELINES 11
PART LIST 14
EXPLODED DRAWING 15
ORDERING REPLACEMENT PARTS . . . . . Back Cover
LIMITED WARRANTY . . . . . Back Cover

WARNING DECAL PLACEMENT

This drawing shows the location(s) of the warning decal(s). **If a decal is missing or illegible, see the front cover of this manual and request a free replacement decal. Apply the decal in the location shown.** Note: The decal(s) may not be shown at actual size.

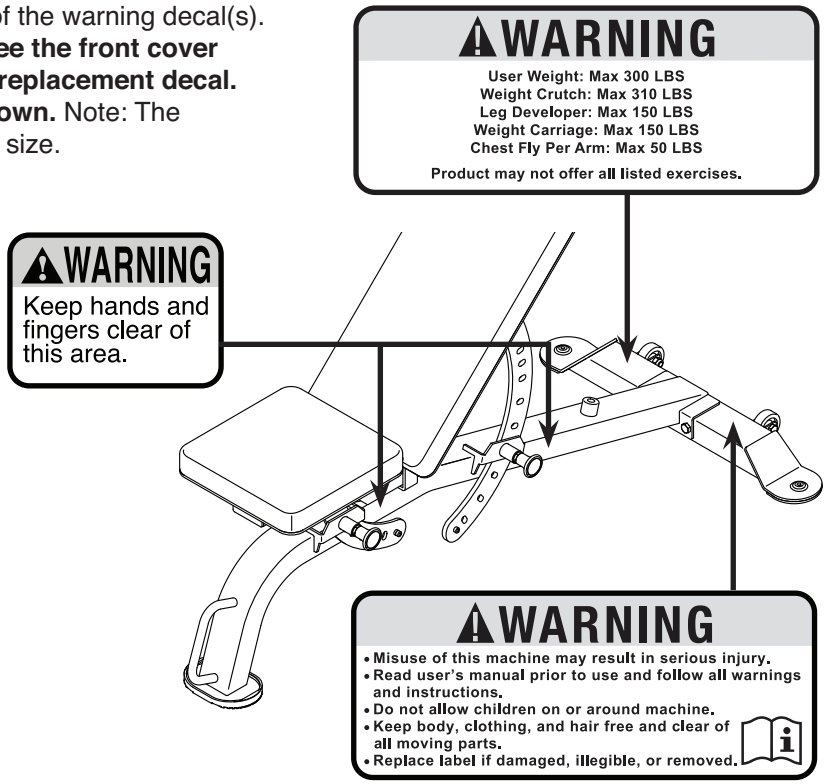

NORDICTRACK is a registered trademark of ICON Health & Fitness, Inc.

IMPORTANT PRECAUTIONS

⚠ WARNING: To reduce the risk of serious injury, read all important precautions and instructions in this manual and all warnings on your weight bench before using your weight bench. ICON assumes no responsibility for personal injury or property damage sustained by or through the use of this product.

1. It is the responsibility of the owner to ensure that all users of the weight bench are adequately informed of all precautions.
2. Before beginning any exercise program, consult your physician. This is especially important for persons over age 35 or persons with pre-existing health problems.
3. The weight bench is not intended for use by persons with reduced physical, sensory, or mental capabilities or lack of experience and knowledge, unless they are given supervision or instruction about the use of the weight bench by someone responsible for their safety.
4. Use the weight bench only as described in this manual.
5. The weight bench is intended for home use only. Do not use the weight bench in any commercial, rental, or institutional setting.
6. Keep the weight bench indoors, away from moisture and dust. Do not put the weight bench in a garage or covered patio, or near water.
7. Place the weight bench on a level surface, with enough clearance around the weight bench to mount, dismount, and use the weight bench. To protect the floor or carpet from damage, place a mat under the weight bench.
8. Inspect and properly tighten all parts each time the weight bench is used. Replace any worn parts immediately. Use only manufacturer-supplied parts.
9. Keep children under age 16 and pets away from the weight bench at all times.
10. Keep hands and feet away from moving parts.
11. Wear appropriate clothes while exercising; do not wear loose clothes that could become caught on the weight bench. Always wear athletic shoes for foot protection while using the weight bench.
12. The weight bench is designed to support a maximum user weight of 300 lbs. (136 kg), and a maximum total weight of 610 lbs. (277 kg). Do not use the weight bench with more than 310 lbs. (141 kg) of weight, including a barbell. Note: The weight bench does not include weights or a barbell.
13. Over exercising may result in serious injury or death. If you feel faint, if you become short of breath, or if you experience pain while exercising, stop immediately and cool down.

BEFORE YOU BEGIN

Thank you for selecting the NORDICTRACK® ADJUSTABLE BENCH. The ADJUSTABLE BENCH is designed to help you develop the major muscle groups of your upper body. Whether your goal is to tone your body, build dramatic muscle size and strength, or improve your cardiovascular system, the weight bench will help you to achieve the specific results you want.

For your benefit, read this manual carefully before you use the weight bench. If you have questions after reading this manual, please see the front cover of this manual. To help us assist you, note the product model number and serial number before contacting us. The model number and the location of the serial number decal are shown on the front cover of this manual.

Before reading further, please familiarize yourself with the parts that are labeled in the drawing below.

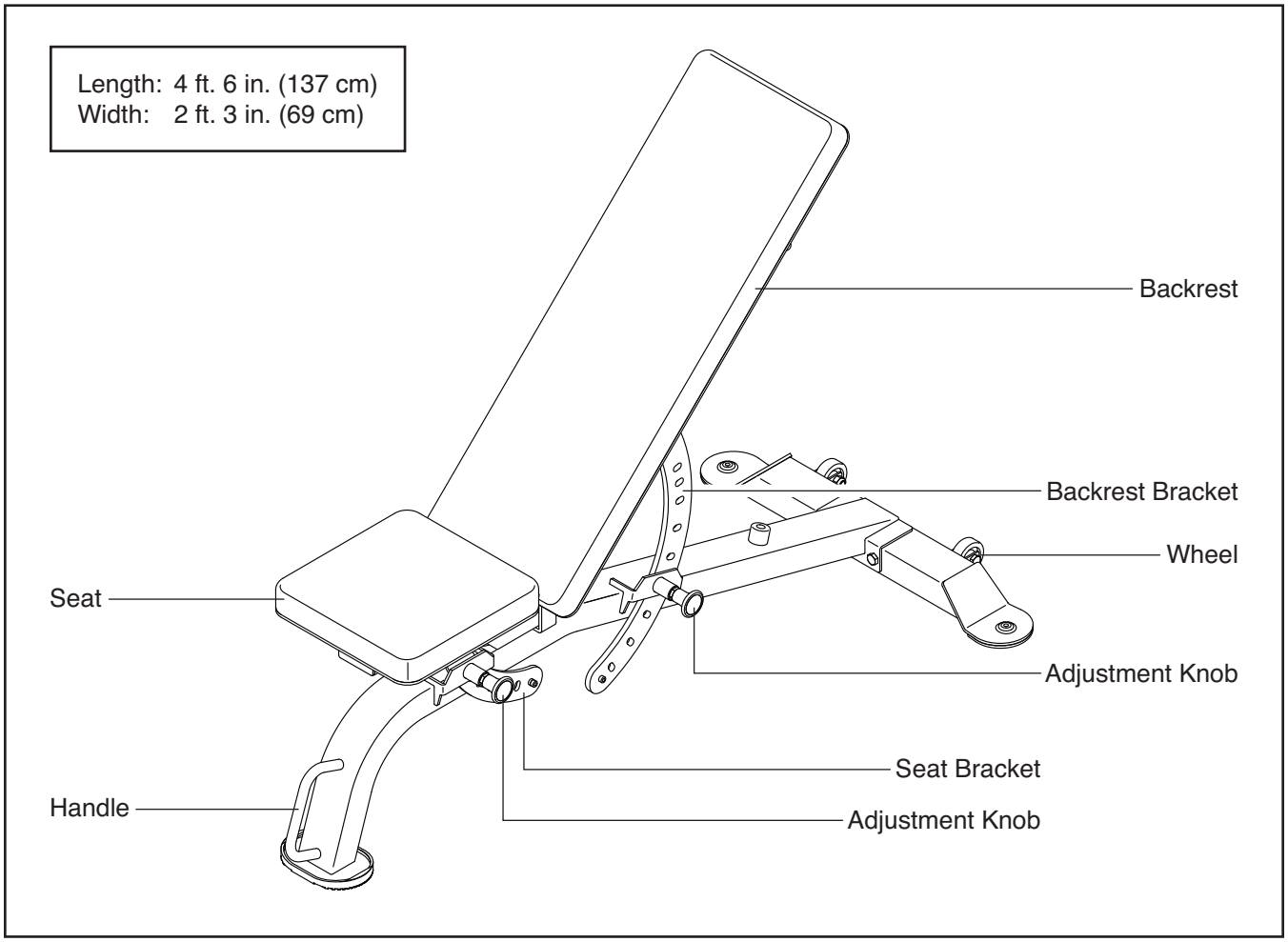

PART IDENTIFICATION CHART

Use the drawings below to identify the small parts needed for assembly. The number in parentheses below each drawing is the key number of the part, from the PART LIST near the end of this manual. **Note: If a part is not in the hardware kit, check to see whether it has been preassembled. Extra hardware may be included.**

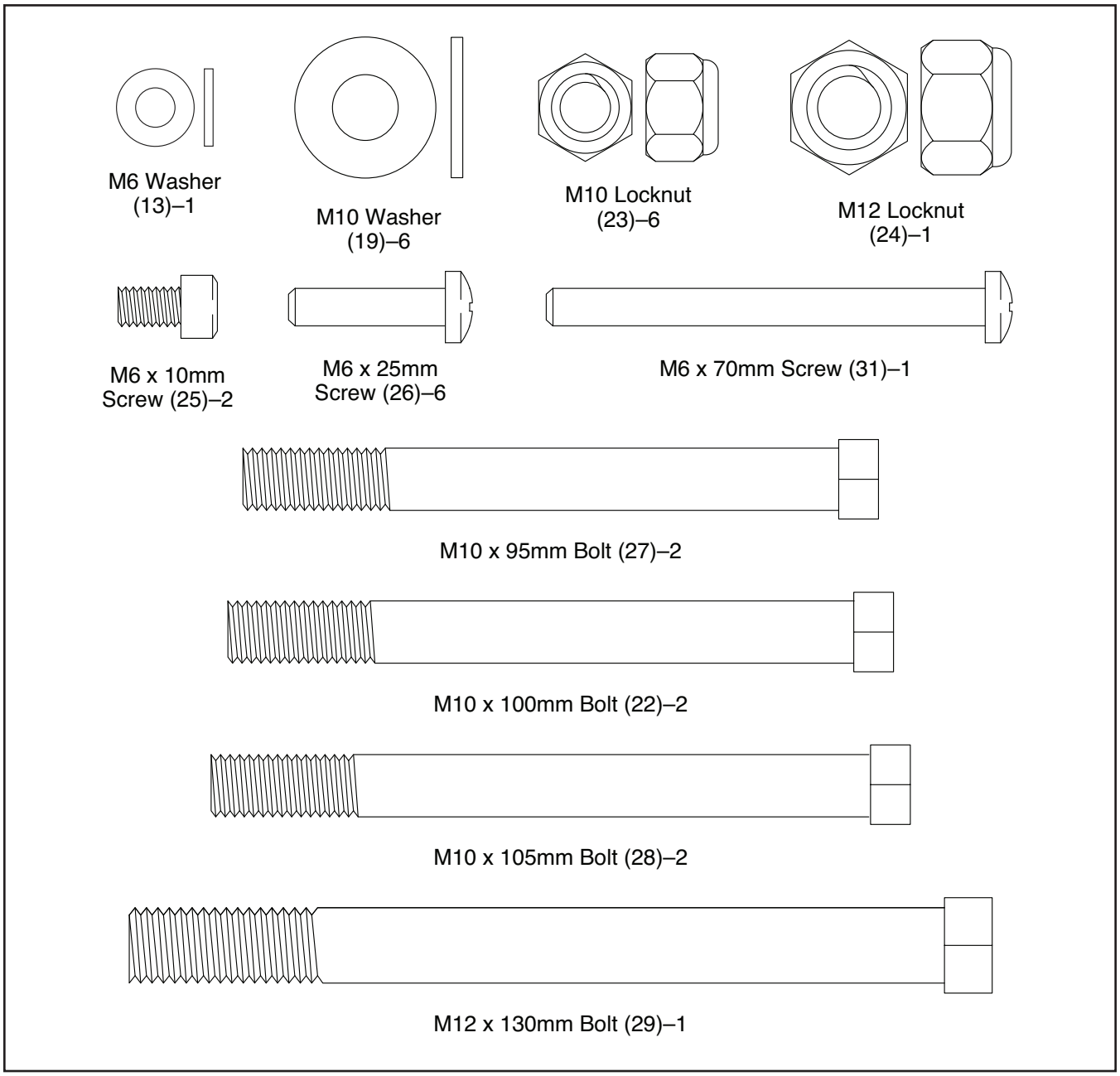

ASSEMBLY

Easy step-by-step interactive 3D assembly instructions for this product can be found on BILT®

Download the **FREE** App

Scan here and search by your model number

Download on the App Store

GET IT ON Google Play

1. **To use the assembly steps in this manual, first see the helpful tips below.**

- Assemble the weight bench in the location where it will be used. Make sure that there is enough clearance to walk around the weight bench as you assemble it.
- Place all parts in a cleared area and remove the packing materials. Do not dispose of the packing materials until you finish all assembly steps.
- Assembly requires two persons.
- To identify small parts, see page 5.
- In addition to the included tool(s), assembly requires the following tools:

  one Phillips screwdriver 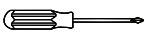

  two adjustable wrenches 

  Assembly may be easier if you have a set of wrenches. To avoid damaging parts, do not use power tools.

2. Attach the Base (2) to the Frame (1) with two M10 x 95mm Bolts (27), two M10 Washers (19), and two M10 Locknuts (23).

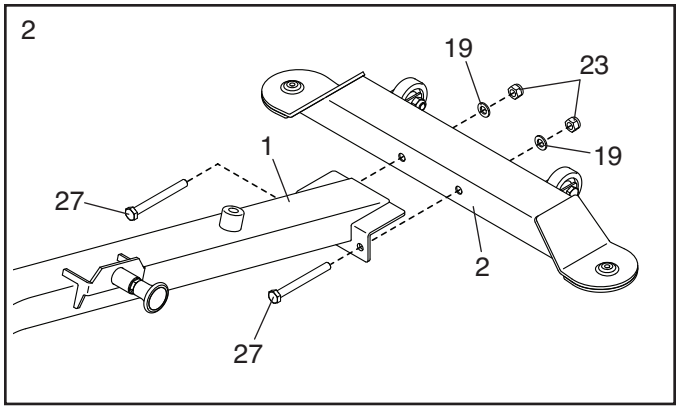

3. Attach the Seat Bracket (12) to the Seat Frame (4) with two M10 x 100mm Bolts (22), two M10 Washers (19), and two M10 Locknuts (23); **do not tighten the Locknuts yet.**

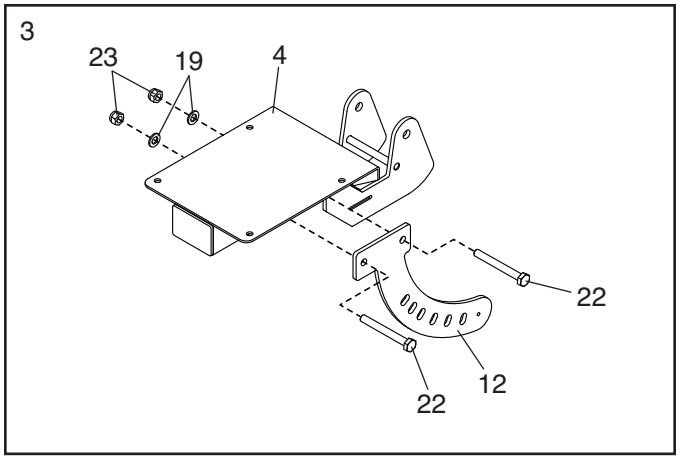

4. Attach the Seat (5) to the Seat Frame (4) with four M6 x 25mm Screws (26); **start all four Screws, and then tighten them.**

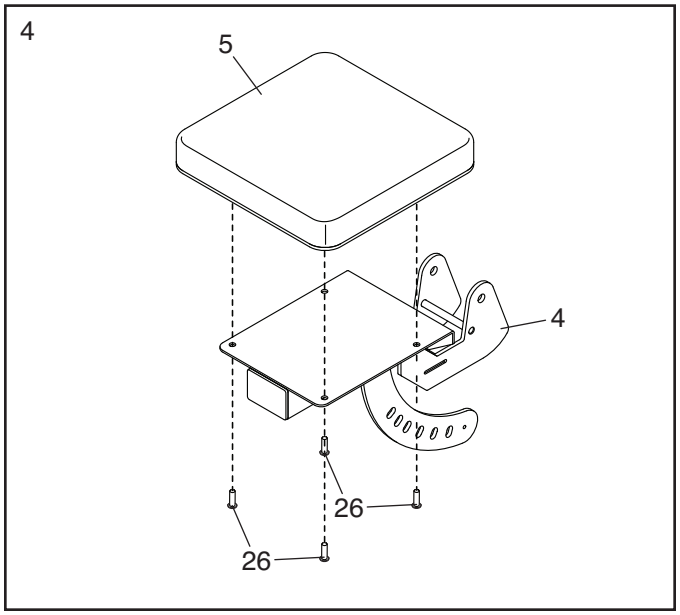

5. Attach the Backrest Bracket (7) to the Backrest Frame (3) with two M10 x 105mm Bolts (28), two M10 Washers (19), and two M10 Locknuts (23); **do not tighten the Locknuts yet.**

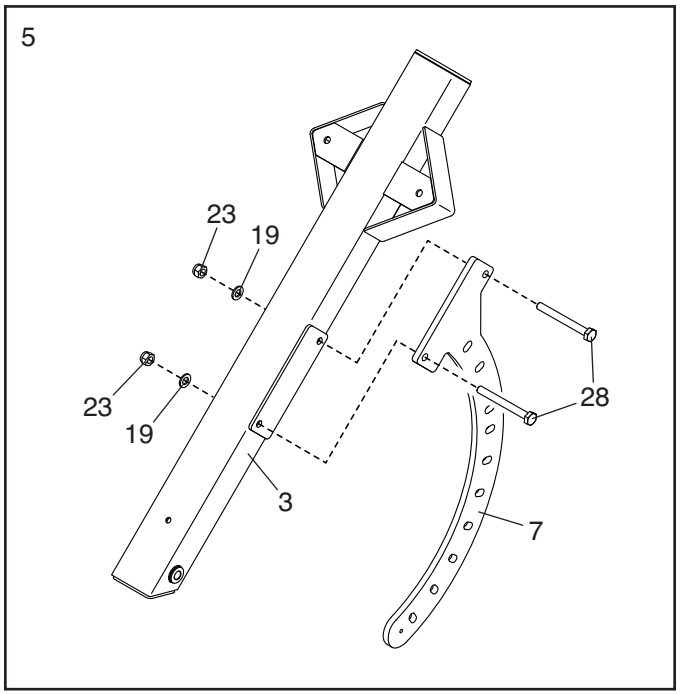

6. Attach the Backrest (6) to the Backrest Frame (3) with two M6 x 25mm Screws (26), an M6 x 70mm Screw (31), and an M6 Washer (13); **start all three Screws, and then tighten them.**

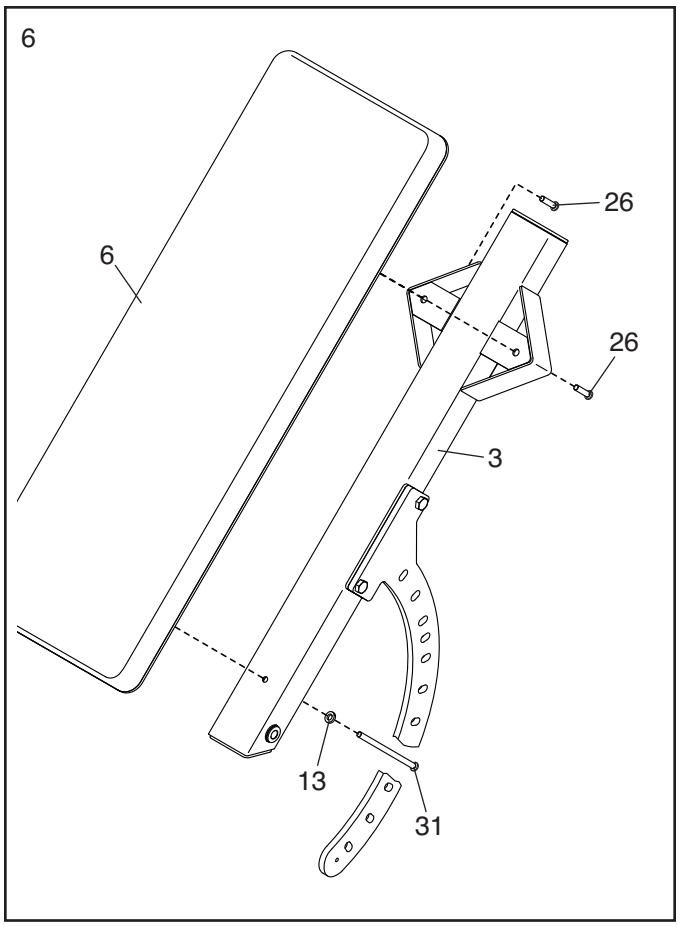

7. Pull the indicated Adjustment Knob (8), insert the Backrest Bracket (7) through the rear bracket (A) on the Frame (1), and then release the Adjustment Knob into one of the adjustment holes in the Backrest Bracket.

   Next, have a second person hold the end of the Backrest Frame (3) inside of the U-bracket (B) on the Frame (1) until assembly step 9 is completed.

   Then, tighten an M6 x 10mm Screw (25) into the small hole in the end of the Backrest Bracket (7).

   Note: To adjust the Backrest (6), see ADJUSTING THE BACKREST on page 10.

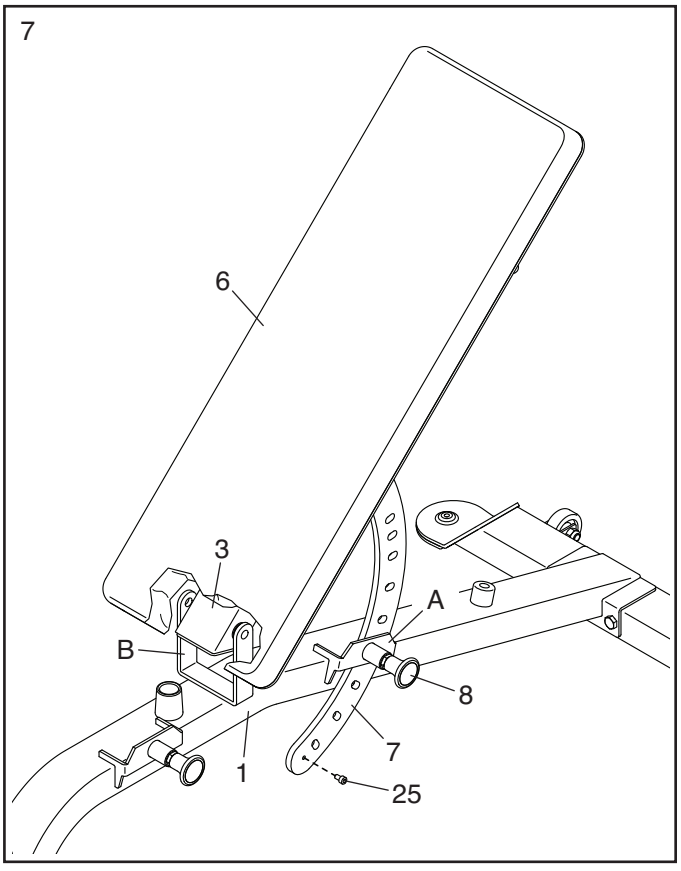

8. Pull the indicated Adjustment Knob (8), insert the Seat Bracket (12) through the front bracket (C) on the Frame (1), and then release the Adjustment Knob into one of the adjustment holes in the Seat Bracket.

   Next, position the Seat Frame (4) between the U-bracket (B) on the Frame (1) and the Backrest Frame (3).

   See the inset drawing. Attach the Bracket Stop (20) to the Seat Bracket (12) with an M6 x 10mm Screw (25).

   Note: To adjust the Seat (5), see ADJUSTING THE SEAT on page 10.

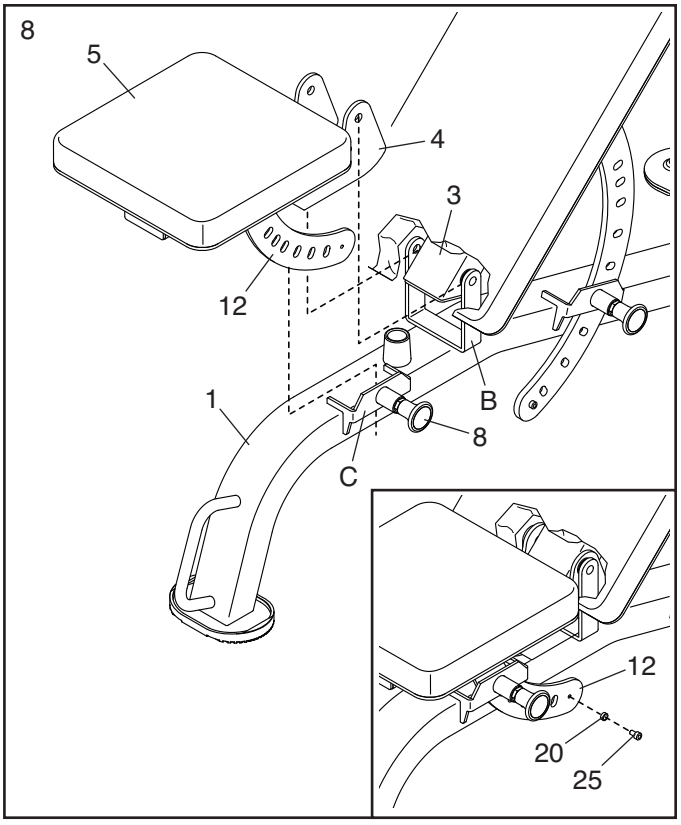

9. Using a plastic bag to keep your fingers clean, apply some of the included grease to an M12 x 130mm Bolt (29).

   Insert the M12 x 130mm Bolt (29) through the U-bracket (B) on the Frame (1), through the Seat Frame (4), and through the Backrest Frame (3). Then, tighten an M12 Locknut (24) onto the Bolt. **Do not overtighten the Locknut; the Seat Frame and the Backrest Frame must pivot freely.**

   See steps 3 and 5. Tighten the two M10 Locknuts (23) in each step.

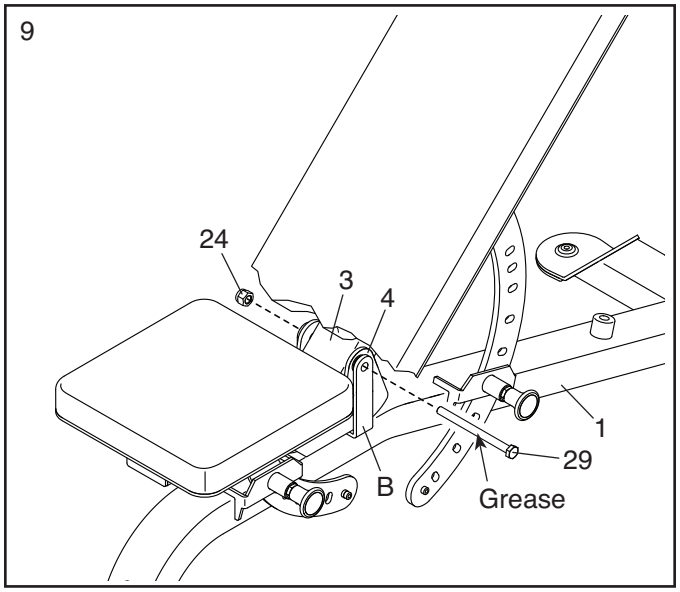

10. **Make sure that all parts of the weight bench are properly tightened.** Extra parts may be included. Place a mat under the weight bench to protect the floor.

    To register your product and activate your warranty today, go to my.nordictrack.com.

ADJUSTMENT

This section explains how to adjust the weight bench. See the EXERCISE GUIDELINES on page 11 for important information about how to get the most benefit from your exercise program.

Make sure that all parts are properly tightened each time you use the weight bench. Replace any worn parts immediately. Use only manufacturer-supplied parts. The weight bench can be cleaned with a damp cloth and a mild, non-abrasive detergent; **do not use solvents.**

ADJUSTING THE BACKREST

To adjust the angle of the Backrest (6), **firmly hold the Backrest with one hand.** With your other hand, pull the indicated Adjustment Knob (8), raise or lower the Backrest, and then insert the Adjustment Knob into one of the adjustment holes in the Backrest Bracket (7).

⚠WARNING: Always hold the Backrest (6) before you pull the Adjustment Knob (8); the Backrest can fall with great force.

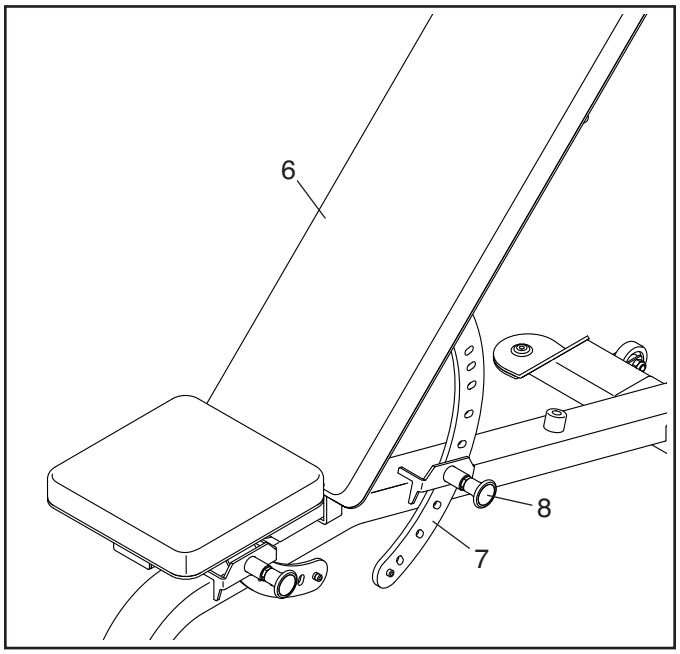

ADJUSTING THE SEAT

To adjust the angle of the Seat (5), **firmly hold the Seat with one hand.** With your other hand, pull the indicated Adjustment Knob (8), raise or lower the Seat, and then insert the Adjustment Knob into one of the adjustment holes in the Seat Bracket (12).

⚠WARNING: Always hold the Seat (5) before you pull the Adjustment Knob (8); the Seat can fall with great force.

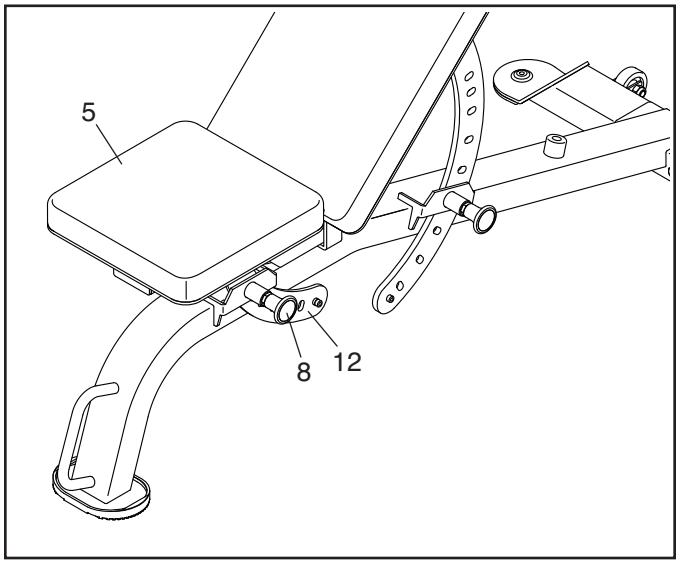

EXERCISE GUIDELINES

FOUR TYPES OF STRENGTH WORKOUTS

Note: A “repetition” is one complete cycle of an exercise, such as one sit-up. A “set” is a series of repetitions.

Muscle Building—Work your muscles near their maximum capacity and progressively increase the intensity of your exercise. Adjust the intensity level of an individual exercise as follows:
- Change the amount of resistance used.
- Change the number of repetitions or sets performed.

Use your own judgment to determine the amount of resistance that is right for you. Begin with 3 sets of 8 repetitions for each exercise you perform. Rest for 3 minutes after each set. When you can complete 3 sets of 12 repetitions without difficulty, increase the amount of resistance.

Toning—Tone your muscles by working them to a moderate percentage of their capacity. Select a moderate amount of resistance and increase the number of repetitions in each set. Complete as many sets of 15 to 20 repetitions as possible without discomfort. Rest for 1 minute after each set. Work your muscles by completing more sets rather than by using high amounts of resistance.

Weight Loss—To lose weight, use a low amount of resistance and increase the number of repetitions in each set. Exercise for 20 to 30 minutes, resting for a maximum of 30 seconds between sets.

Cross Training—Combine strength training and aerobic exercise by following this type of program:
- Strength training workouts on Monday, Wednesday, and Friday.
- 20 to 30 minutes of aerobic exercise on Tuesday and Thursday.
- One full day of rest each week to give your body time to regenerate.

WORKOUT GUIDELINES

Familiarize yourself with the equipment and learn the proper form for each exercise. Use your own judgment to determine the appropriate length of time for each workout, and the numbers of repetitions and sets to complete. Progress at your own pace and be sensitive to your body’s signals. Follow each workout with at least one day of rest.

Warming Up—Start with 5 to 10 minutes of stretching and light exercise. A warm-up increases your body temperature, heart rate, and circulation in preparation for exercise.

Working Out—Include 6 to 10 different exercises in each workout. Select exercises for every major muscle group, emphasizing areas that you want to develop. To give balance and variety to your workouts, vary the exercises from workout to workout.

Cooling Down—Finish with 5 to 10 minutes of stretching. Stretching increases the flexibility of your muscles and helps to prevent post-exercise problems.

EXERCISE FORM

Move through the full range of motion for each exercise and move only the appropriate parts of the body. Perform the repetitions in each set smoothly and without pausing. The exertion stage of each repetition should last about half as long as the return stage. Exhale during the exertion stage of each repetition and inhale during the return stroke. Never hold your breath.

Rest for a short period of time after each set:
- Muscle Building—Rest for three minutes after each set.
- Toning—Rest for one minute after each set.
- Weight Loss—Rest for 30 seconds after each set.

STAYING MOTIVATED

For motivation, keep a record of each workout. Write the date, the exercises performed, the resistance used, and the numbers of sets and repetitions completed. Record your weight and key body measurements once a month. To achieve good results, make exercise a regular and enjoyable part of your life.

EXERCISE LOG

Make copies of this page, and use the copies to schedule and record your strength and aerobic workouts. Scheduling and recording your workouts will help you to make exercise a regular and enjoyable part of your life.

Strength
Date:
___/___/___

Exercise	Lbs.	Sets	Reps	Exercise	Lbs.	Sets	Reps
1.				6.			
2.				7.			
3.				8.			
4.				9.			
5.				10.			

Aerobic
Date:
___/___/___

Exercise	Time	Distance	Speed

Strength
Date:
___/___/___

Exercise	Lbs.	Sets	Reps	Exercise	Lbs.	Sets	Reps
1.				6.			
2.				7.			
3.				8.			
4.				9.			
5.				10.			

Aerobic
Date:
___/___/___

Exercise	Time	Distance	Speed

Strength
Date:
___/___/___

Exercise	Lbs.	Sets	Reps	Exercise	Lbs.	Sets	Reps
1.				6.			
2.				7.			
3.				8.			
4.				9.			
5.				10.			

NOTES

PART LIST

Model No. NTBE19.1 R0421A

Key No.	Qty.	Description
1	1	Frame
2	1	Base
3	1	Backrest Frame
4	1	Seat Frame
5	1	Seat
6	1	Backrest
7	1	Backrest Bracket
8	2	Adjustment Knob
9	2	M6 x 15mm Screw
10	2	ST4.2 x 19mm Screw
11	2	Rectangular Cap
12	1	Seat Bracket
13	1	M6 Washer
14	2	Wheel
15	2	Base Foot
16	1	Frame Foot
17	1	Small Bumper
18	2	Bushing
19	6	M10 Washer
20	1	Bracket Stop
21	1	Large Bumper
22	2	M10 x 100mm Bolt
23	8	M10 Locknut
24	1	M12 Locknut
25	2	M6 x 10mm Screw
26	6	M6 x 25mm Screw
27	2	M10 x 95mm Bolt
28	2	M10 x 105mm Bolt
29	1	M12 x 130mm Bolt
30	2	M10 x 45mm Bolt
31	1	M6 x 70mm Screw
*	–	User's Manual
*	–	Grease Packet

Note: Specifications are subject to change without notice. For information about ordering replacement parts, see the back cover of this manual. *These parts are not illustrated.

EXPLODED DRAWING

Model No. NTBE19.1 R0421A

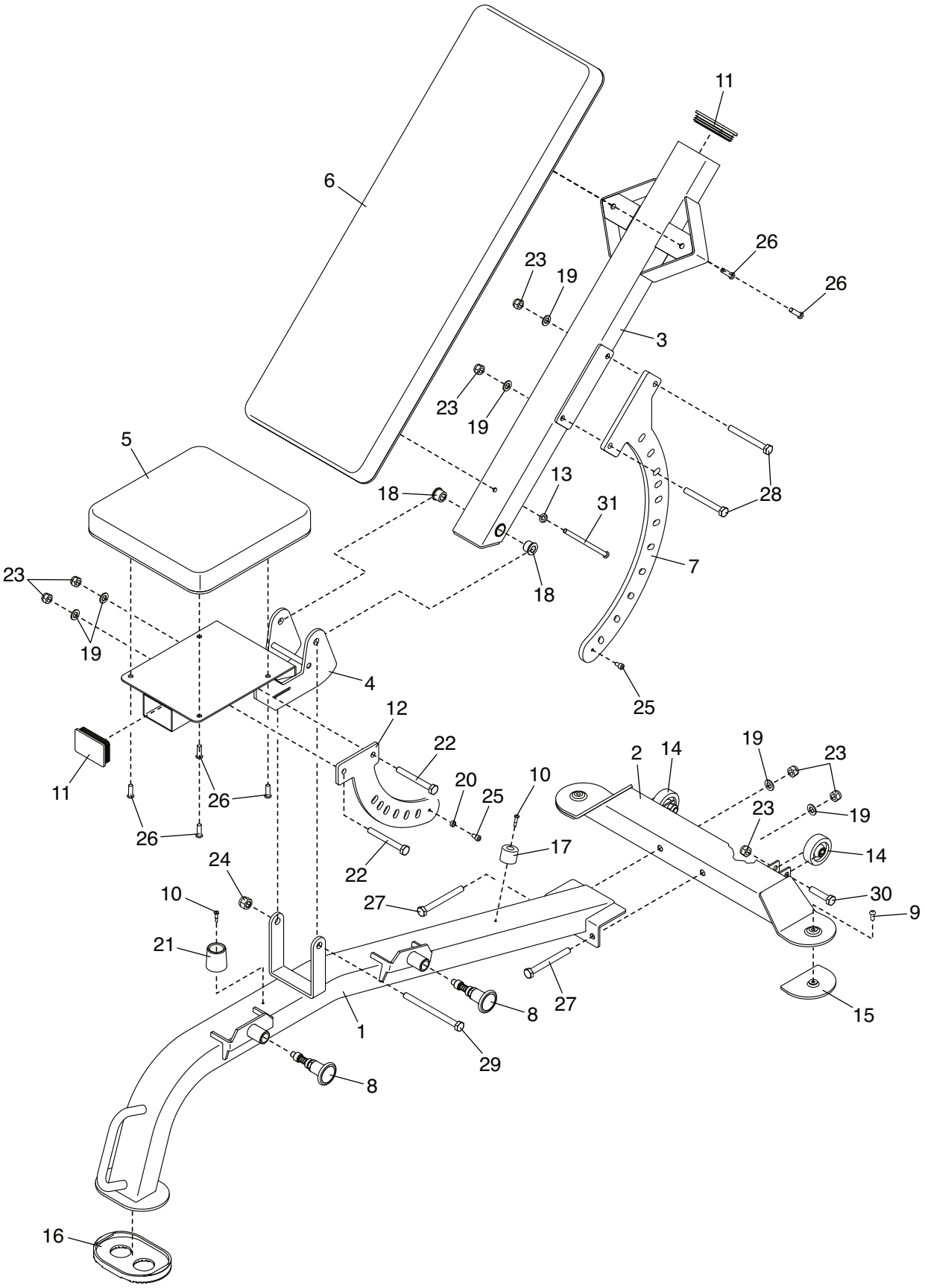

ORDERING REPLACEMENT PARTS

To order replacement parts, please see the front cover of this manual. To help us assist you, be prepared to provide the following information when contacting us:

- the model number and serial number of the product (see the front cover of this manual)
- the name of the product (see the front cover of this manual)
- the key number and description of the replacement part(s) (see the PART LIST and the EXPLODED DRAWING near the end of this manual)

LIMITED WARRANTY

ICON Health & Fitness, Inc. (ICON) warrants this product to be free from defects in workmanship and material, under normal use and service conditions. Parts are warranted for ninety (90) days from the date of purchase.

This warranty extends only to the original purchaser (customer) and is not transferrable. ICON's obligation under this warranty is limited to repairing or replacing, at ICON's discretion, the product through one of its authorized service providers. All repairs for which warranty claims are made must be preauthorized by ICON. If replacement parts are shipped while the product is under warranty, the customer will be responsible for a minimal handling charge. This warranty does not extend to freight damage to the product. This warranty will automatically be voided by the following conditions: (1) if the product is used as a store display model, (2) if the product is purchased or transported outside the USA, (3) if any instruction or warning in this manual is not followed, (4) if the product is abused or improperly or abnormally used, (5) if the product is modified to alter functionality or capability without the written permission of ICON, or (6) if the product is used for commercial or rental purposes. No other warranty beyond that specifically set forth above is authorized by ICON.

ICON is not responsible or liable for the following damages: (1) indirect, special, or consequential damages arising out of or in connection with the use or performance of the product; (2) damages with respect to any economic loss, loss of property, loss of revenues or profits, loss of enjoyment or use, or costs of removal or installation; or (3) other consequential damages of any kind. Some states do not allow the exclusion or limitation of incidental or consequential damages. Accordingly, the above limitation may not apply to the customer.

The warranty extended hereunder is in lieu of any and all other warranties, and any implied warranties of merchantability or fitness for a particular purpose are limited in their scope and duration to the terms set forth herein. Some states do not allow limitations on how long an implied warranty lasts. Accordingly, the above limitation may not apply to the customer. This warranty provides specific legal rights; the customer may have other rights that vary from state to state.

For warranty service, please call the telephone number on the front cover of this manual. Please be prepared to provide the model number and serial number of the product (see the front cover of this manual).

ICON Health & Fitness, Inc., 1500 S. 1000 W., Logan, UT 84321-9813

Part No. 431466 R0421A

Printed in China © 2021 ICON Health & Fitness, Inc.