TORO®

# Operator's Manual

## Ultra Buggy® 2500-TS

### Model—Serial Range

**68141**—414400369 and Up
**68141G**—400000000 and Up

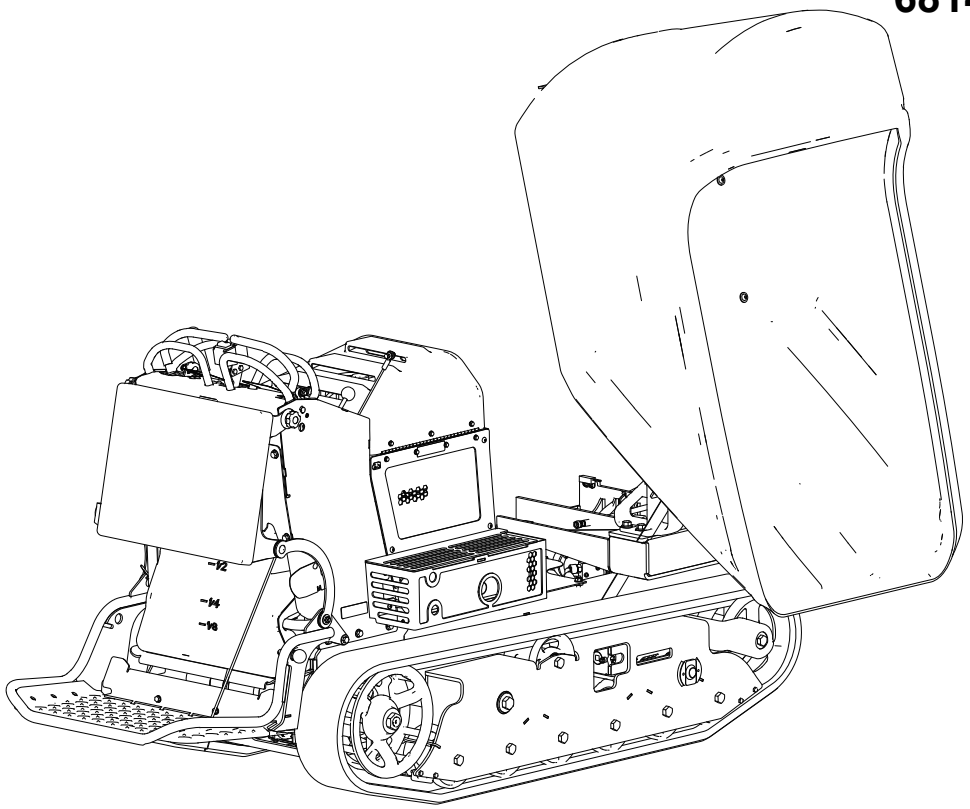

3462-915C

Original Instructions (EN)

*3462-915*C

# Disclaimers and Regulatory Information

It is a violation of California Public Resource Code Section 4442 or 4443 to use or operate the engine on any forest-covered, brush-covered, or grass-covered land unless the engine is equipped with a spark arrester, as defined in Section 4442, maintained in effective working order or the engine is constructed, equipped, and maintained for the prevention of fire.

Because in some areas there are local, state, or federal regulations requiring that a spark arrester be used on the engine of this machine, a spark arrester is available as an option. If you require a spark arrester, contact your Authorized Service Dealer. Genuine Toro spark arresters are approved by the USDA Forestry Service.

The enclosed engine owner's manual is supplied for information regarding the US Environmental Protection Agency (EPA) and the California Emission Control Regulation of emission systems, maintenance, and warranty. Replacements may be ordered through the engine manufacturer.

**⚠ WARNING**

CALIFORNIA
Proposition 65

The engine exhaust from this product contains chemicals known to the State of California to cause cancer, birth defects, or other reproductive harm.

Battery posts, terminals, and related accessories contain lead and lead compounds, chemicals known to the State of California to cause cancer and reproductive harm. Wash hands after handling.

Use of this product may cause exposure to chemicals known to the State of California to cause cancer, birth defects, or other reproductive harm.

# Table of Contents


Disclaimers and Regulatory Information ..... 2
Chapter 1: Introduction ..... 1–1
- Intended Use ..... 1–1
- Getting Help ..... 1–1
- Manual Conventions ..... 1–2
  - Safety Alert Classifications ..... 1–2

Chapter 2: Safety ..... 2–1
- General Safety ..... 2–1
- Safety and Instructional Decals ..... 2–1

Chapter 3: Product Overview ..... 3–1
- Controls ..... 3–1
  - Choke Control ..... 3–1
  - Drive Controls ..... 3–1
  - Dump Controls ..... 3–1
  - Key Switch ..... 3–2



© 2024—The Toro® Company


8111 Lyndale Ave So
Bloomington, MN 55044

Contact us at www.Toro.com


Printed in the USA


All rights reserved

Parking Brake ..... 3–2
Throttle Control ..... 3–2
Swivel Switch ..... 3–2
Specifications ..... 3–3
Attachments/Accessories ..... 3–3
Chapter 4: Operation ..... 4–1
Before Operation ..... 4–1
Before Operation Safety ..... 4–1
Fuel ..... 4–2
Performing Daily Maintenance ..... 4–3
During Operation ..... 4–3
During Operation Safety ..... 4–3
Starting the Engine ..... 4–5
Shutting Off the Engine ..... 4–6
Operator Platform ..... 4–6
Operating the Hopper ..... 4–7
After Operation ..... 4–8
After Operation Safety ..... 4–8
Removing Debris from the Machine ..... 4–8
Lowering the Hopper without Power ..... 4–9
Raising the Hopper without Power ..... 4–10
Haul the Machine ..... 4–11
Chapter 5: Maintenance ..... 5–1
Maintenance Safety ..... 5–1
Recommended Maintenance Schedule ..... 5–2
Pre-Maintenance Procedures ..... 5–3
Moving a Non-Functional Machine ..... 5–3
Lifting the Machine ..... 5–4
Releasing the Cushion for Rear Access ..... 5–4
Using the Cylinder Lock ..... 5–4
Lubrication ..... 5–6
Greasing the Machine ..... 5–6
Engine Maintenance ..... 5–7
Servicing the Air Cleaner ..... 5–7
Engine Oil Service ..... 5–8
Replacing the Spark Plug ..... 5–10
Cleaning the Blower Housing ..... 5–10
Fuel System Maintenance ..... 5–11
Replacing the Fuel Filter ..... 5–11
Draining the Fuel Tank ..... 5–11
Removing the Fuel Tank ..... 5–12
Electrical System Maintenance ..... 5–12
Electrical System Safety ..... 5–12
Battery Service ..... 5–12
Replacing a Fuse ..... 5–15
Drive System Maintenance ..... 5–15
Track Service ..... 5–15
Drive Belt ..... 5–19
Controls Maintenance ..... 5–21
Adjusting the Motion-Control Levers ..... 5–21
Brake Maintenance ..... 5–22
Checking the Parking Brake ..... 5–22
Adjusting the Parking Brake ..... 5–22

Hydraulic System Maintenance ..... 5–23
Hydraulic Drive System ..... 5–23
Hydraulic Lift and Slew System ..... 5–26
Checking the Hydraulic Lines ..... 5–29
Cleaning ..... 5–29
Removing Debris ..... 5–29
Chapter 6: Storage ..... 6–1
Storage Safety ..... 6–1
Preparing the Machine for Storage Over 30 Days ..... 6–1
Chapter 7: Troubleshooting ..... 7–1
California Proposition 65 Warning Information

# Intended Use

This machine is intended to be used by professional, hired operators in commercial applications. This machine is a stable, reliable, and productive machine for carrying and moving materials for any job site. It is primarily designed to move concrete, mortar, gravel, dirt, or debris around job sites. Using this product for purposes other than its intended use could prove dangerous to you and bystanders.

Read this information carefully to learn how to operate and maintain your product properly and to avoid injury and product damage. You are responsible for operating the product properly and safely.

# Getting Help

Visit www.Toro.com for product safety and operation training materials, accessory information, help finding a dealer, or to register your product.

Whenever you need service, genuine Toro parts, or additional information, contact an Authorized Service Dealer or Toro Customer Service and have the model and serial numbers of your product ready. These numbers are located on the serial plate on your product (1). Write the numbers in the space provided.

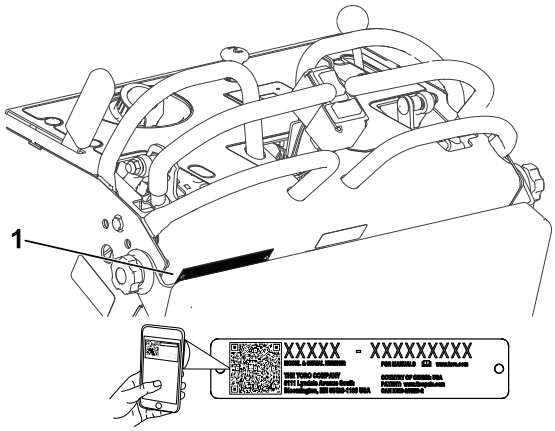


g322677

**IMPORTANT**

**With your mobile device, you can scan the QR code on the serial number decal (if equipped) to access warranty, parts, and other product information.**

| | | | |
|---|---|---|---|
| **Model Number:** | | **Serial Number:** | |

# Manual Conventions

This manual identifies potential hazards and has safety messages identified by the safety-alert symbol, which signals a hazard that may cause serious injury or death if you do not follow the recommended precautions.



G405934

This manual uses 2 words to highlight information. **Important** calls attention to special mechanical information and **Note** emphasizes general information worthy of special attention.

# Safety Alert Classifications

The safety-alert symbol shown in this manual and on the machine identifies important safety messages that you must follow to prevent accidents.

Safety-alert symbol appears above information that alerts you to unsafe actions or situations and is followed by the word **DANGER**, **WARNING**, or **CAUTION**.

**DANGER**

**Danger indicates an imminently hazardous situation which, if not avoided, *will* result in death or serious injury.**

---

**WARNING**

**Warning indicates a potentially hazardous situation which, if not avoided, *could* result in death or serious injury.**

---

**CAUTION**

**Caution indicates a potentially hazardous situation which, if not avoided, *may* result in minor or moderate injury.**

---

# General Safety

- Read and understand the contents of this *Operator's Manual* before starting the engine.
- Do not operate the machine without all guards and other safety protective devices in place and functioning properly on the machine.
- Park the machine on a level surface, lower the hopper, shut off the engine, and remove the key (if applicable) before leaving the operating position.
- Keep your hands and feet away from moving parts. If possible, do not make adjustments with the engine running.

Improperly using or maintaining the machine can result in injury. To reduce the potential for injury, comply with these safety instructions and always pay attention to the safety-alert symbol ⚠, which means **Caution**, **Warning**, or **Danger**—personal safety instruction. Failure to comply with the instruction may result in personal injury or death.

# Safety and Instructional Decals

Safety decals and instructions are easily visible to the operator and are located near any area of potential danger. Replace any decal that is damaged or missing.

## Decal Part: 115-4858




decal115-4858

(1) Force from above can cause crushing of fingers, hands, toes, or feet —install the cylinder lock.

## Decal Part: 116-8775

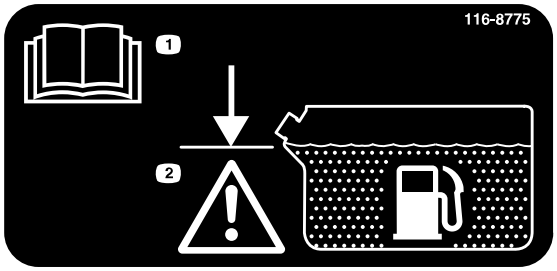


decal116-8775

(1) Read the *Operator's Manual*.

(2) Warning—fill to the bottom of the filler neck; do not overfill the tank.

# Decal Part: 125-4967

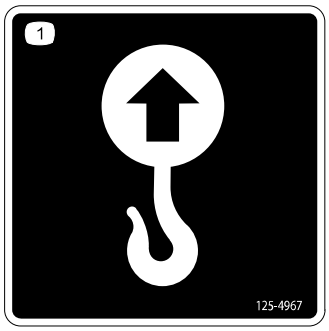


decal125-4967

1. Lift point

# Decal Part: 132-8961

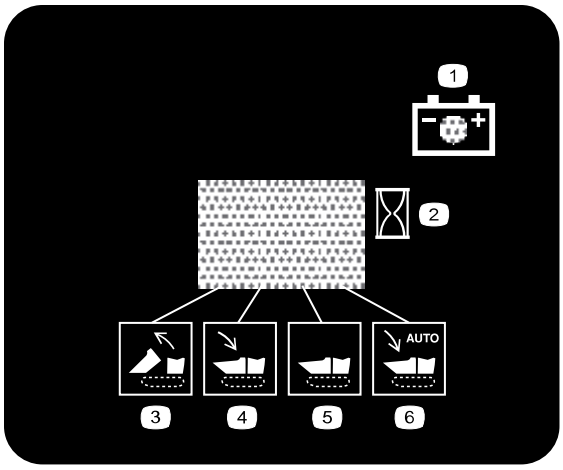


decal132-8961

1. Battery charging condition
2. Hour meter
3. Hopper is raising.
4. Hopper is lowering.
5. Hopper is down.
6. Hopper is lowering automatically.

# Decal Part: 133-8062




s_decal133-8062

# Decal Part: 132-9051

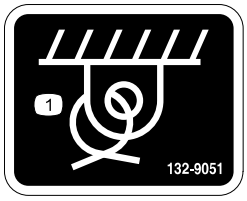


decal132-9051

1. Tie-down point

# Decal Part: 132-9052

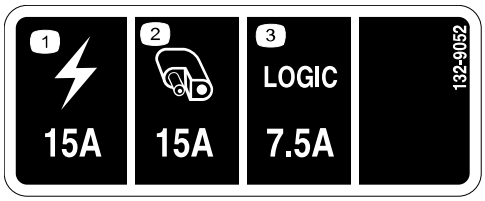


decal132-9052

1. Power
2. Auxiliary
3. Logic

# Decal Part: 137-0575

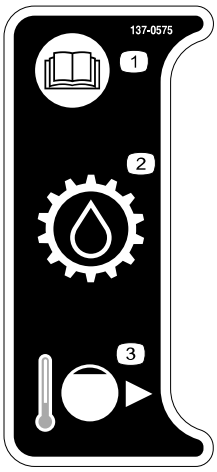


decal137-0575

1. Read the *Operator's Manual*.
2. Transmission fluid
3. Cold fill line

# Decal Part: 139-7202

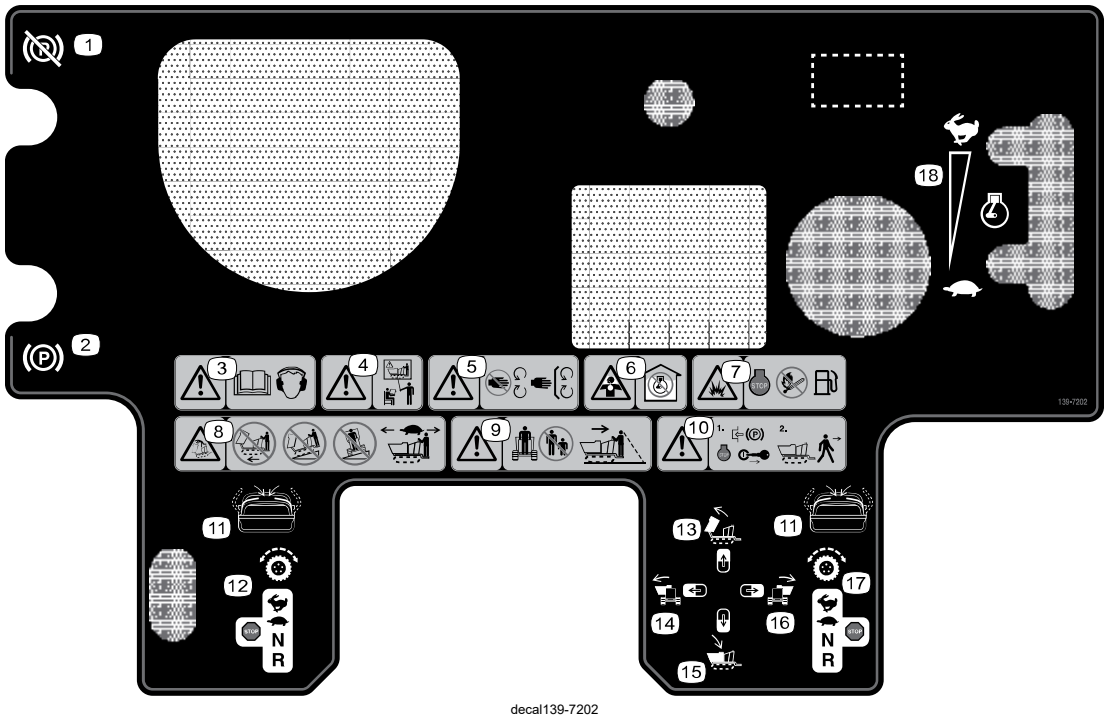


decal139-7202

1. Parking brake—disengage
2. Parking brake—engage
3. Warning—read the *Operator's Manual*; wear hearing protection.

4. Warning—all operators should read the *Operator's Manual* and be trained before operating the machine.
5. Warning—stay away from moving parts; keep all guards and shields in place.
6. Asphyxiation hazard, poisonous fumes, or toxic gases—do not run the engine in an enclosed space.
7. Explosion hazard—shut off the engine; do not expose to fire or open flame while fueling
8. Tipping hazard—do not drive forward with the hopper raised; do not drive down slopes with the hopper raised; do not drive across slopes with the hopper raised; drive slowly with the hopper lowered.
9. Warning—keep bystanders away; look behind and down when moving in reverse.
10. Warning—engage the parking brake, shut off the engine, and remove the key before leaving the operator's position.
11. Move the handles in to operate.
12. Left traction controls.
13. Raise the hopper.
14. Swivel the hopper to the left.
15. Lower the hopper.
16. Swivel the hopper to the right.
17. Right traction controls.
18. Engine-speed control.

# Decal Part: 147-3270

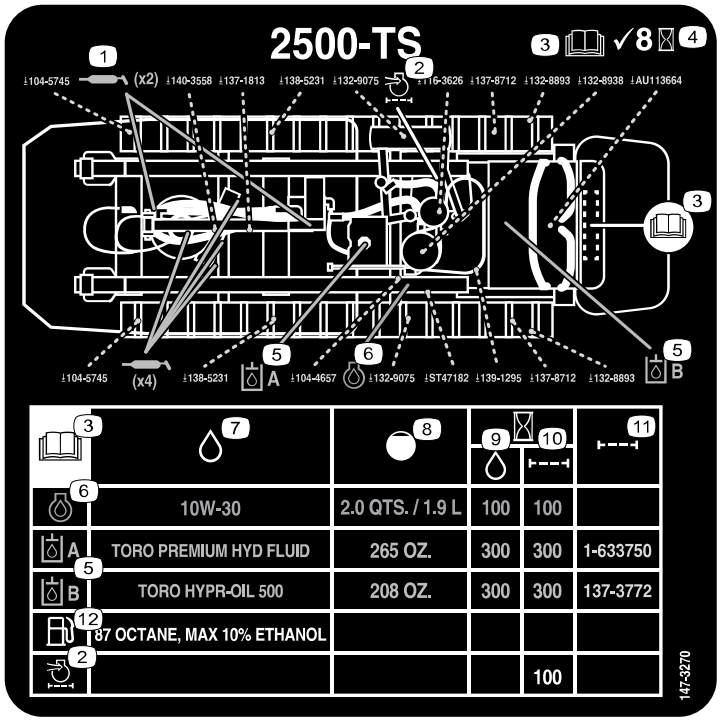


s_decal147-3270

1. Grease points
2. Engine air filter
3. *Operator's Manual*
4. Check every 8 hours.
5. Hydraulic fluid
6. Engine oil
7. Fluid specification
8. Capacity
9. Fluid interval
10. Filter interval
11. Filter
12. Fuel

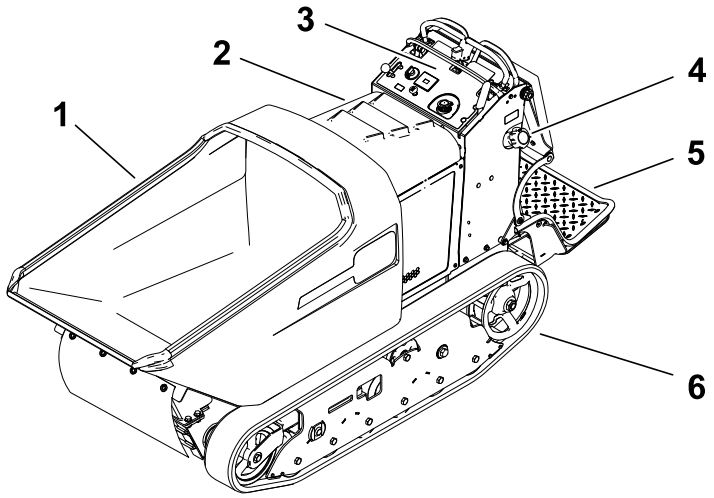


g038268

1. Hopper
2. Hood
3. Control panel
4. Fuel-tank cap
5. Operator platform
6. Tracks

# Controls

## Choke Control

G376191

1. ENGAGE the choke before starting a cold engine.
2. DISENGAGE the choke when the engine is warm.

## Drive Controls

G375673

## Dump Controls

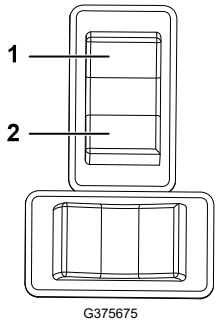


G375675

1. Dump hopper
2. Lower hopper

# Key Switch

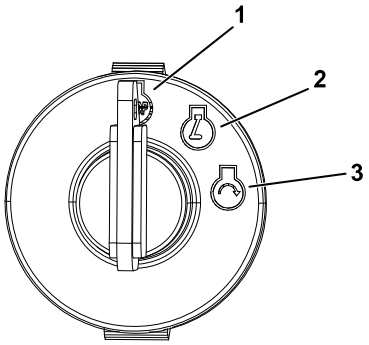

G375755

1. Stop engine
2. Run engine
3. Start engine

# Parking Brake

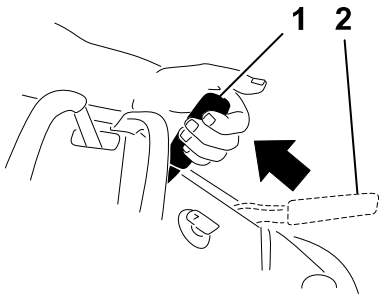

g009465

1. Engage
2. Disengage

# Throttle Control

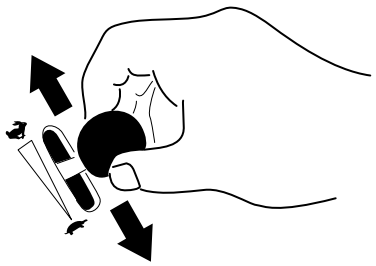
g357324

# Swivel Switch

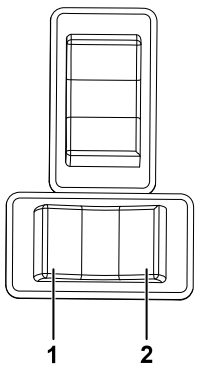

G375676

1. Swivel left
2. Swivel right

# Specifications

**Note:** Specifications and design are subject to change without notice.

| | |
|---|---|
| Width | 90.2 cm (35.5 inches) |
| Length | 268 cm (105.5 inches) |
| Height | 130.18 cm (51.25 inches) |
| Weight | 855.5 kg (1886 lb) |
| Hopper capacity | 0.45 $m^3$ (16 cu.ft.) |
| Maximum load | 1134 kg (2500 lb) |
| Discharge height | 38.1 cm (15 inches) |

# Attachments/Accessories

A selection of Toro approved attachments and accessories is available for use with the machine to enhance and expand its capabilities. Contact your Authorized Service Dealer or authorized Toro distributor or go to www.Toro.com for a list of all approved attachments and accessories.

To ensure optimum performance and continued safety certification of the machine, use only genuine Toro replacement parts and accessories.

# Before Operation

## Before Operation Safety

### General Safety

- Never allow children or untrained people to operate the machine. Local regulations may restrict the age of the operator. The owner is responsible for training all operators and mechanics.
- Become familiar with the safe operation of the equipment, operator controls, and safety signs.
- Inspect the area where you will use the machine and remove all objects that could interfere with the operation of the machine.
- Know and mark the locations of all utility lines.
- Check that the operator's presence controls, safety switches, and shields are attached and functioning properly. Do not operate the machine unless they are functioning properly.
- Locate the pinch point areas marked on the machine and keep your hands and feet away from these areas.
- Do not carry passengers on the machine.
- Keep bystanders, especially children, out of the operating area. Ensure that the area is clear of bystanders before operating the machine. Shut off the machine if a bystander enters the area.
- Park the machine on a level surface, engage the parking brake, and shut off the engine. Wait for all movement to stop and allow the machine to cool before adjusting, servicing, cleaning, or storing the machine.

### Fuel Safety

Use extreme care in handling fuel. It is flammable and its vapors are explosive.

- Extinguish all cigarettes, cigars, pipes, and other sources of ignition.
- Use only an approved container.
- Do not remove the fuel cap or fill the fuel tank while the engine is running or hot.
- Do not add or drain fuel in an enclosed space.
- Do not store the machine or fuel container where there is an open flame, spark, or pilot light, such as on a water heater or other appliance.

# Before Operation Safety (continued)

- If you spill fuel, do not attempt to start the engine; avoid creating any source of ignition until the fuel vapors have dissipated.
- Do not fill containers inside a vehicle or on a truck or trailer bed with a plastic liner. Always place containers on the ground, away from your vehicle before filling.
- Remove the equipment from the truck or trailer and refuel it while it is on the ground. If this is not possible, then refuel from a portable container rather than a fuel-dispenser nozzle.
- Keep the fuel-dispenser nozzle in contact with the rim of the fuel tank or container opening at all times until fueling is complete. Do not use a nozzle-lock-open device.
- Do not operate the machine without the entire exhaust system in place and working properly.
- Fuel is harmful or fatal if swallowed. Long-term exposure to vapors can cause serious injury and illness.
  - Avoid prolonged breathing of vapors.
  - Keep your face away from the nozzle and fuel tank or conditioner opening.
  - Keep fuel away from your eyes and skin.

# Fuel

## Fuel Specifications

| | |
|---|---|
| Capacity | 40.1 L (10.6 US gallons) |
| Type | Unleaded gasoline |
| Minimum octane rating | 87 (US) or 91 (research octane; outside the US) |
| Ethanol | No more than 10% by volume |
| Methanol | None |
| MTBE (methyl tertiary butyl ether) | Less than 15% by volume |
| Oil | Do not add to the fuel |

Use only clean, fresh (no more than 30 days old), fuel from a reputable source.

**IMPORTANT**

**To reduce starting problems, add fuel stabilizer/conditioner to fresh fuel as directed by the fuel-stabilizer/conditioner manufacturer.**

# Fuel (continued)

## Filling the Fuel Tank

1. Clean the area around the fuel-tank cap.
2. Remove the cap.
3. Add fuel until it is at the bottom of the filler neck.

   **Note:** Do not fill the fuel tank completely full. The empty space in the tank allows the fuel to expand.
4. Install the cap.

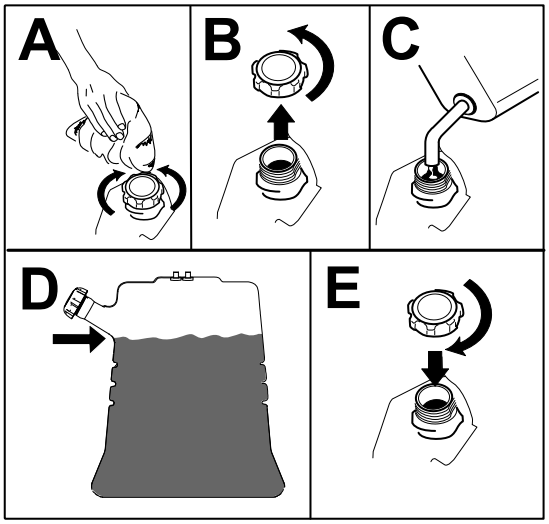

g038312

# Performing Daily Maintenance

Before starting the machine each day, perform the Each Use/Daily procedures listed in the Maintenance Schedule.

# During Operation

# During Operation Safety

## General Safety

- The owner/user can prevent and is responsible for accidents that may cause personal injury or property damage.
- Do not exceed the rated operating capacity, as the machine may become unstable, which may result in loss of control.
- Wear appropriate clothing including eye protection, long pants, substantial slip-resistant footwear, and hearing protection. Tie back long hair and do not wear loose clothing or loose jewelry.
- Use your full attention while operating the machine. Do not engage in any activity that causes distractions; otherwise, injury or property damage may occur.
- Do not operate the machine while ill, tired, or under the influence of alcohol or drugs.
- Operate the machine only in good light, keeping away from holes and hidden hazards.
- Ensure that all drives are in the NEUTRAL position before starting the engine. Start the engine only from the operating position.
- Keep your hands and feet away from moving parts. If possible, do not make adjustments with the engine running.

# During Operation Safety (continued)

- Never jerk the controls; use a steady motion.
- Use care when approaching blind corners, shrubs, trees, or other objects that may obscure your vision.
- Slow down and use caution when making turns and crossing roads and sidewalks with the machine. Always yield the right-of-way.
- Operate the engine only in well-ventilated areas. Exhaust gasses contain carbon monoxide, which is lethal if inhaled.
- Never leave a running machine unattended.
- Operate the machine only in good visibility and appropriate weather conditions. Do not operate the machine when there is the risk of lightning.
- Be aware of obstacles in close proximity to you. Failure to maintain adequate distance from trees, walls, and other barriers may result in injury as the machine backs up during operation if you are not attentive to the surroundings.
- Check for overhead clearance (i.e., electrical wires, branches, and doorways) before driving under any objects and do not contact them.
- Do not overload the hopper and always keep the load level when operating the machine.
- Keep the hopper lowered and straight (if applicable) when moving, storing, loading, transporting, and cleaning the machine.
- Do not modify the machine.
- Use care and slow down when you are operating the machine on a slippery surface.
- Always look down and behind you before moving the machine in reverse.
- If you feel uneasy operating the machine because the terrain is rough, slippery, or unfamiliar, do not do it.
- Distribute loads evenly to improve the stability and control of the machine.
- Liquid loads shift, which can cause the machine to tip over.

## Slope Safety

- Slopes are a major factor related to loss-of-control and tip-over accidents, which can result in severe injury or death. You are responsible for safe slope operation. Operating the machine on any slope requires extra caution. Before using the machine on a slope, do the following:
  - Review and understand the slope instructions in the manual and on the machine.
  - Evaluate the site conditions of the day to determine if the slope is safe for machine operation. Always use common sense and good judgment when performing this evaluation. Changes in the terrain, such as moisture, can quickly affect the operation of the machine on a slope.
- Do not raise the hopper on a slope. Raising the hopper on a slope affects the stability of the machine. Keep the hopper in the lowered and straight position when on slopes.
- When operating on a slope, fold the platform up and walk behind the machine until it is on flat ground.

# During Operation Safety (continued)

- **Operate up and down slopes with the heavy end of the machine uphill.** Weight distribution changes with a full hopper. A full hopper makes the front of the machine the heavy end, so walk behind the machine with the full hopper uphill.
- Identify hazards at the base of the slope. Do not operate the machine near drop-offs, ditches, embankments, water or other hazards. The machine could suddenly roll over if a wheel or track goes over the edge or the edge collapses. Keep a safe distance (twice the width of the machine) between the machine and any hazard.
- Avoid starting, stopping, or turning the machine on a slope. Avoid making sudden changes in speed or direction; turn slowly and gradually.
- Keep all movements on slopes slow and gradual. Do not make sudden changes in speed or direction.
- Do not operate the machine under any conditions where traction, steering, or stability is in question. Be aware that operating the machine on wet grass, across slopes or downhill may cause the machine to lose traction. Loss of traction to the wheels or tracks may result in sliding and a loss of braking and steering. The machine can slide even if the wheels or tracks are stopped.
- Remove or mark obstacles such as ditches, holes, ruts, bumps, rocks or other hidden hazards. Tall grass can hide obstacles. Uneven terrain could overturn the machine.
- If you lose control of the machine, step off and away from the direction of travel of the machine.

# Starting the Engine

1. Engage the parking brake (A).
2. Engage the choke (B).

   **Note:** A warm or hot engine may not require choking. You may need to repeat the starting cycle when you start the engine for the first time after you have filled a completely empty fuel system with fuel.

   **Note:** Let the machine stay at low idle for 3 minutes when starting the machine in a temperature below 30°F.
3. Move the throttle between the FAST and SLOW positions (C).
4. Turn the key switch to the START position (D).
5. When the engine starts (E), disengage the choke (F).

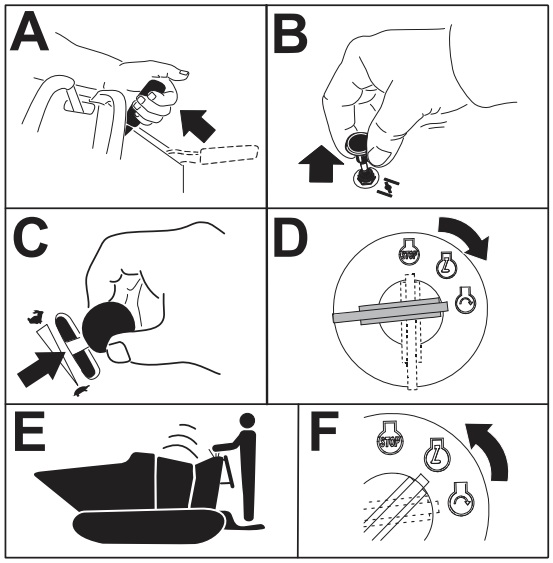

G375752

# Starting the Engine (continued)

**IMPORTANT**

**Do not engage the starter for more than 5 seconds at a time. If the engine fails to start, allow a 15-second cool-down period between attempts. Failure to follow these instructions can burn out the starter.**

# Shutting Off the Engine

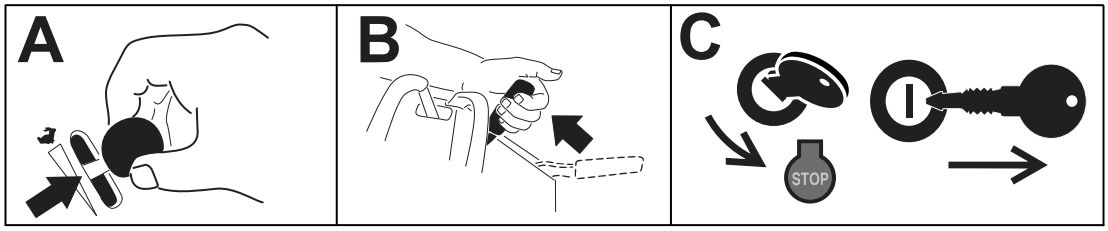


G375756

1. Move the throttle between the FAST and SLOW positions.
2. Engage the parking brake.
3. Turn the key switch to the OFF position and remove the key.

# Operator Platform

You can use the machine with the platform in the up or down position.

**⚠ WARNING ⚠**

**The operator platform is heavy and may cause injury when you raise or lower it. Carefully lower or raise the operator platform, as suddenly dropping it could injure you.**

- **Do not put your hands or fingers in the platform-pivot area when lowering or raising the operator platform.**
- **Make sure that the platform is supported when you pull the latch pin out.**
- **Make sure that the latch secures the platform when folding it up. Push it tight against the cushion for the latch pin to lock into place.**
- **Keep bystanders away from the machine when raising or lowering the platform.**

Operate the machine with the platform up for the following conditions:

- Using the machine near drop-offs
- Using the machine in small areas where the machine is too large
- Areas with low-hanging branches or obstacles
- When loading or unloading the machine from a trailer for transport

# Operator Platform (continued)

- Driving up slopes

Operate the machine with the platform down for the following conditions:

- Using the machine in most areas
- Driving across slopes
- Driving down slopes

## Raising the Platform

1. Pull the platform up so that the latch pin and knob lock it into place.
2. Push it tight against the cushion for the latch pin to lock in place.

## Lowering the Platform

1. Push the platform against the cushion to release pressure on the latch pin.
2. Pull the latch pin knob out and lower the platform.

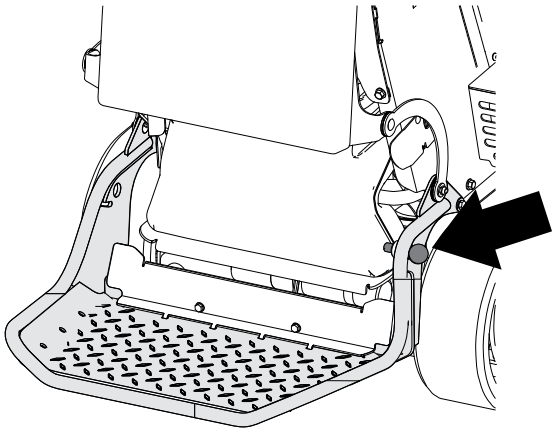

G384424

# Operating the Hopper

Do not exceed the load capacity of the machine. This machine normally operates on uneven, unpaved, bumpy, and/or inclined surfaces—adjust the load accordingly.

1. Position the machine where you intend to dump the load.
2. Rotate the hopper left or right by pushing the left or right side of the swivel switch (2).
3. Dump the hopper by pushing the top of the dump switch (1).
4. Lower the hopper by pushing the bottom of the dump switch (1).

   **Note:** If you hold the bottom of the switch for 1 second, the hopper fully lowers automatically.

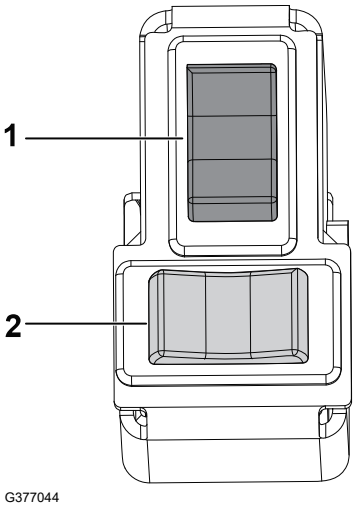


G377044

# After Operation

## After Operation Safety

### General Safety

- Engage the parking brake, shut off the engine, remove the key (if applicable), and wait for all movement to stop before adjusting, cleaning, or repairing the machine.
- Do not touch parts that may be hot from operation. Allow them to cool before attempting to maintain, adjust, or service the machine.
- Clean debris from drives, mufflers, and the engine to help prevent fires. Clean up oil or fuel spills.
- Use care when loading or unloading the machine into a trailer or truck.

## Removing Debris from the Machine

1. Park the machine on a level surface, move the motion-control levers to the NEUTRAL-LOCK position, engage the parking brake, and lower the hopper.
2. Shut off the engine and remove the key. Allow the engine to cool.
3. Clean the inside of the hopper using a hose.

**IMPORTANT**

**Do not use a hammer to remove material from the inside of the hopper; this may cause damage to the machine.**

4. Clean any debris from under the hopper.
5. Wipe away debris from the air cleaner.
6. Clean any debris buildup on the engine and in the transmission with a brush or blower.

**IMPORTANT**

**Blow out dirt rather than wash it out. If you use water, keep it away from electrical parts and hydraulic valves. Do not use a high-pressure washer. High-pressure washing can damage the electrical system and hydraulic valves or deplete grease.**

# Lowering the Hopper without Power

1. Install the cylinder lock.
2. Ensure that the tub is empty.
3. Place a large drain pan under the hydraulic-manifold block.

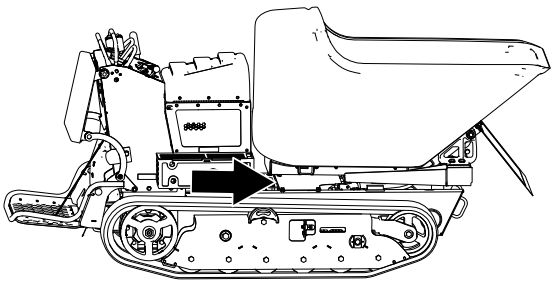

G384891

4. Remove the access panel.

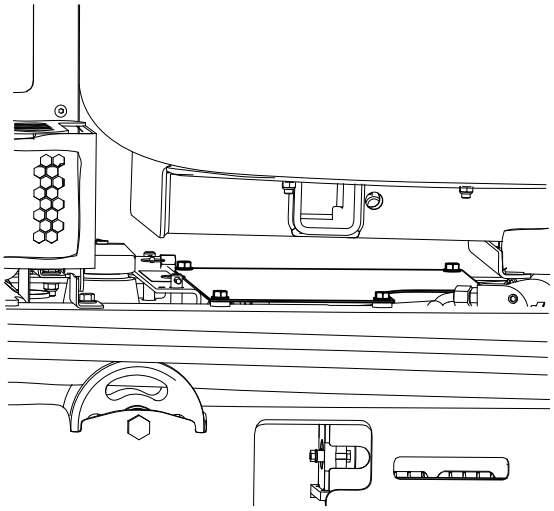

G384893

5. Disconnect the hose fittings in the manifold block and allow the fluid to drain into the pan.

   **Note:** Dispose of the used fluid at a certified recycling center.
6. Connect the hose fittings.
7. Use a hoist or have 2 people hold up the hopper and remove the cylinder lock.
8. Carefully lower the hopper.
9. After making repairs, install the hoses to the manifold block fittings.
10. Add hydraulic fluid.

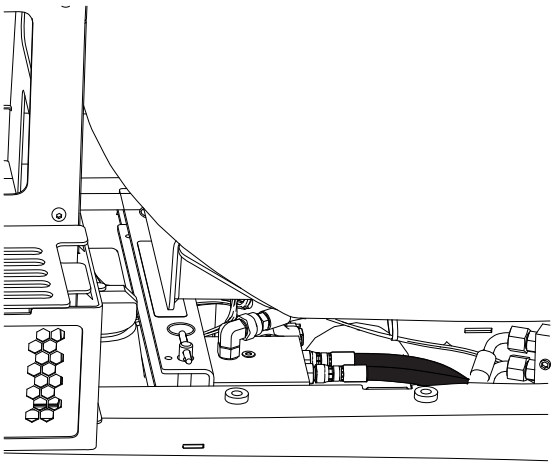

G385185

# Raising the Hopper without Power

1. Remove any material from the hopper.
2. Raise the machine and support it using jack stands rated for the weight of the machine.
3. Place a large drain pan under the hopper lift cylinder.

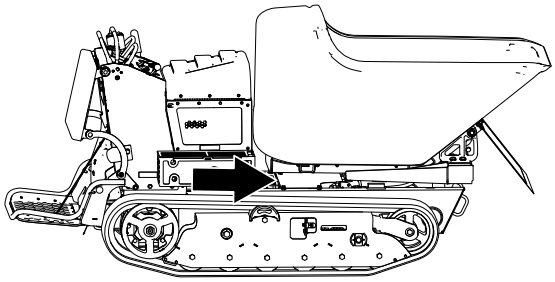

G384891

4. Remove the access panel.

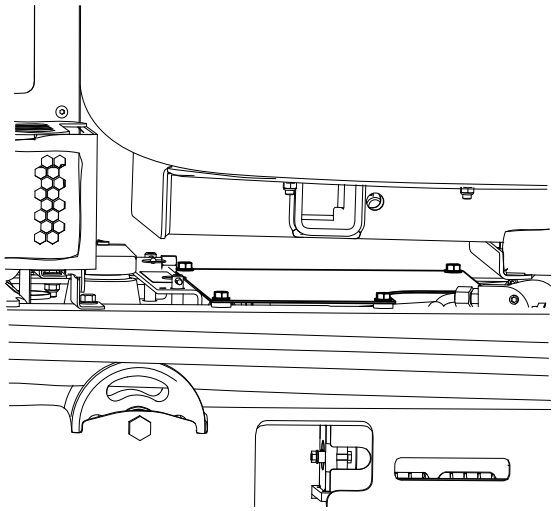

G384893

5. Disconnect the hose fittings in the manifold block and allow the fluid to drain into the pan.

   **Note:** Dispose of the used fluid at a certified recycling center.
6. Use a hoist or have 2 people hold up the hopper and install the cylinder lock.
7. After making repairs, install the hoses to the manifold block fittings.
8. Add hydraulic fluid.
9. Remove and store the cylinder lock.

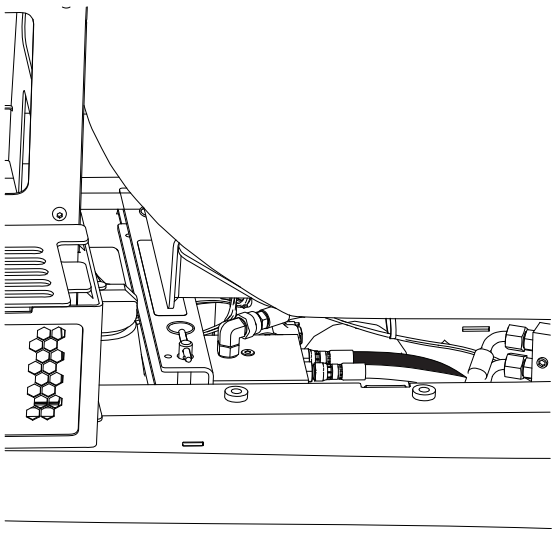

G384892

# Haul the Machine

Use a heavy-duty trailer or truck to haul the machine. Use a full-width ramp. Ensure that the trailer or truck has all the necessary brakes, lighting, and marking as required by law. Please carefully read all the safety instructions. Knowing this information could help you or bystanders avoid injury. Refer to your local ordinances for trailer and tie-down requirements.

**⚠ WARNING ⚠**

**Driving on the street or roadway without turn signals, lights, reflective markings, or a slow-moving-vehicle emblem is dangerous and can lead to accidents causing personal injury.**

**Do not drive the machine on a public street or roadway.**

## Selecting a Trailer

**⚠ WARNING ⚠**

**Loading a machine onto a trailer or truck increases the possibility of tip-over and could cause serious injury or death.**

- **Use only full-width ramps.**
- **Ensure that the length of ramp is at least 4 times as long as the height of the trailer or truck bed to the ground. This ensures that ramp angle does not exceed 15 degrees on flat ground.**

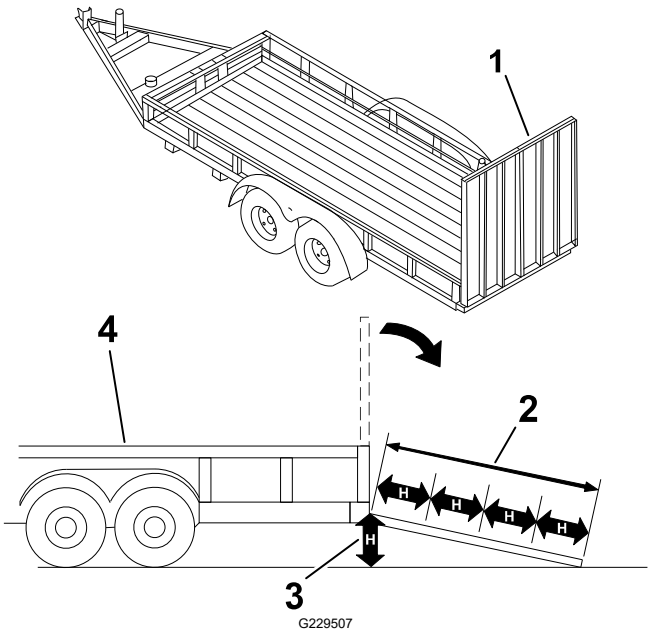


(1) Full-width ramp in stowed position

(2) Ramp is at least 4 times as long as the height of the trailer or truck bed to the ground

(3) H = height of the trailer or truck bed to the ground

(4) Trailer

# Haul the Machine (continued)

## Loading the Machine

**⚠ WARNING ⚠**

**Loading a machine onto a trailer or truck increases the possibility of tip-over and could cause serious injury or death.**

- **Use extreme caution when operating a machine on a ramp.**
- **Load and unload the machine with the heavy end up the ramp.**
- **Avoid sudden acceleration or deceleration while driving the machine on a ramp as this could cause a loss of control or a tip-over situation.**

---

1. If using a trailer, connect it to the towing vehicle and connect the safety chains.
2. If applicable, connect the trailer brakes.
3. Lower the ramp(s).
4. Load the machine onto the trailer with the heavy end up the ramp, carrying loads low.
   - If the machine has a **full** hopper, drive the machine forward up the ramp (1).
   - If the machine has an **empty** hopper, back the machine up the ramp (2).

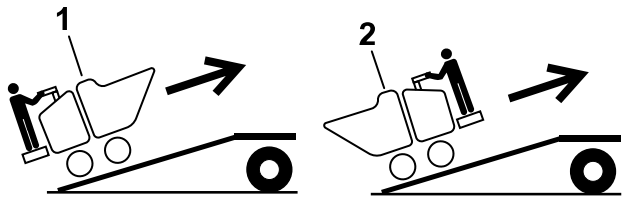

g357132

5. Engage the parking brake and shut off the engine.
6. Use the metal tie-down loop to securely fasten the machine to the trailer or truck with straps, chains, cable, or ropes . Refer to local regulations for tie-down requirements.

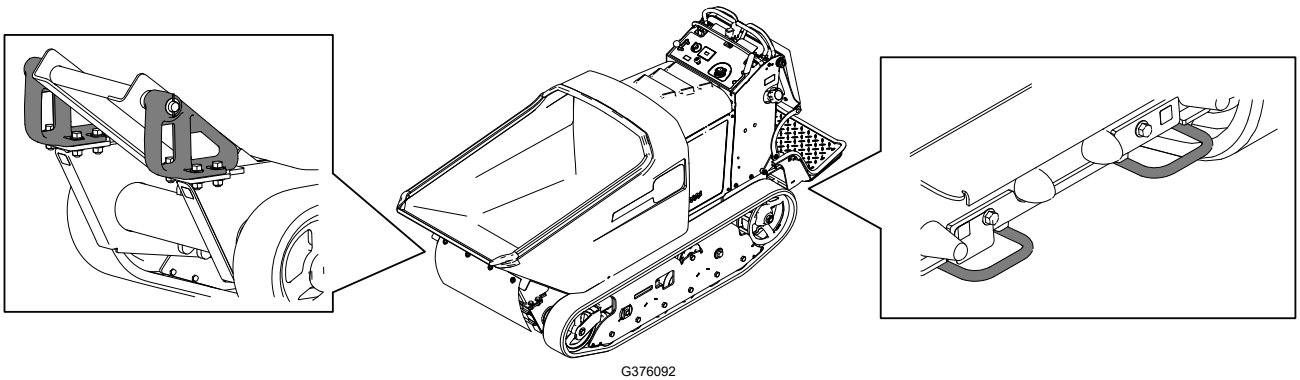
G376092

**IMPORTANT**

**Do not use the tie-down loops to lift the machine.**

---

# Haul the Machine (continued)

## Unloading the Machine

1. Lower the ramp(s).
2. Lower the operator platform.
3. Unload the machine from the trailer with the heavy end up the ramp, carrying loads low.

   - If the machine has a **full** hopper, back it down the ramp ①.
   - If the machine has an **empty** hopper, drive it forward down the ramp ②.

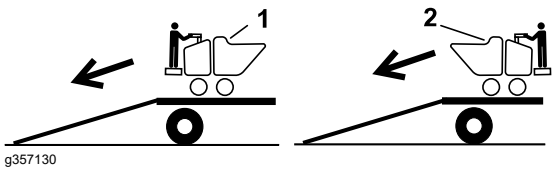

g357130

# Maintenance Safety

- Park the machine on a level surface, engage the parking brake, and shut off the engine. Wait for all movement to stop and allow the machine to cool before adjusting, servicing, cleaning, or storing the machine.
- Disconnect the battery or remove the spark-plug wire before making any repairs. Disconnect the negative terminal first and the positive terminal last. Connect the positive terminal first and negative last.
- Charge the batteries in an open, well-ventilated area, away from spark and flames. Unplug the charger before connecting or disconnecting it from the battery. Wear protective clothing and use insulated tools.
- Battery acid is poisonous and can cause burns. Avoid contact with skin, eyes, and clothing. Protect your face, eyes, and clothing when working with a battery.
- Battery gasses can explode. Keep cigarettes, sparks, and flames away from the battery.
- Do not change the engine governor setting or overspeed the engine.
- Support the machine with jack stands whenever you work under the machine.
- Carefully release pressure from components with stored energy.
- Keep all parts in good working condition and all hardware tightened. Replace all worn or damaged decals.
- Use the cylinder lock to secure the hopper in the raised position.
- Never tamper with safety devices.
- To ensure safe, optimal performance of the machine, use only genuine Toro replacement parts. Replacement parts made by other manufacturers could be dangerous, and such use could void the product warranty.
- Seek immediate medical attention if fluid is injected into skin. Injected fluid must be surgically removed within a few hours by a doctor.
- Ensure that all hydraulic-fluid hoses and lines are in good condition and all hydraulic connections and fittings are tight before applying pressure to the hydraulic system. Keep your body and hands away from pinhole leaks or nozzles that eject high-pressure hydraulic fluid.
- Use cardboard or paper to find hydraulic leaks.
- Safely relieve all pressure in the hydraulic system before performing any work on the hydraulic system.

# Recommended Maintenance Schedule

| Maintenance Service Interval | Maintenance Procedure | Part No. | Qty | Description |
|---|---|---|---|---|
| Before each use or daily | Check the engine oil level. | - | - | - |
| | Clean the blower housing. | - | - | - |
| | Check the tracks. | - | - | - |
| | Check the parking brake operation. | - | - | - |
| | Check the hydraulic fluid for the drive system. | - | - | - |
| | Check the hydraulic fluid for the lift and slew system. | - | - | - |
| | Check for loose fasteners. | - | - | - |
| | Remove debris from the machine. | - | - | - |
| After the first 10 hours | Check and adjust the track tension. | - | - | - |
| Every 25 hours | Service the air cleaner foam element. | - | - | - |
| Every 40 hours | Check the hydraulic lines. | - | - | - |
| Every 50 hours | Grease and oil the machine. | - | - | - |
| | Check and adjust the track tension | - | - | - |
| | Check the battery. | - | - | - |
| Every 100 hours | Change the engine oil. | - | - | - |
| | Change the engine oil filter. | - | - | - |
| | Replace the air cleaner paper element. | - | - | - |
| | Replace the fuel filter. | - | - | - |
| | Check the spark plug. | - | - | - |
| | Clean the cooling areas under the cooling shrouds. | - | - | - |
| | Inspect the drive belt. | - | - | - |
| | Clean the chassis. | - | - | - |
| Every 300 hours | Check the road wheels. | - | - | - |
| | Replace the spark plug. | - | - | - |
| | Replace the drive belt. | 139-1295 | 1 | Belt |
| | Change the hydraulic fluid for the drive system. | 108-1184 | 1 | Toro premium transmission/ hydraulic fluid |
| | Change the hydraulic fluid for the lift and slew system. | 114-4714 | 2 | Toro hypr-oil 500 |
| | Change the hydraulic filters for the drive system. | 137-3772 | 2 | Filter |
| | Change the hydraulic filter for the lift and slew system. | 1-633750 | 1 | Filter |

# Pre-Maintenance Procedures

## Moving a Non-Functional Machine

**IMPORTANT**

**Do not tow or pull the machine without first opening the bypass valves in this procedure, or you will damage the hydraulic system.**

**Note:** Opening the bypass valves will ease moving the machine, but the tracks may still skid due to their length and resistance.

1. If possible, raise the hopper and install the cylinder lock.
2. Shut off the engine and remove the key.
3. Using a wrench, turn the bypass valve on the left and right transaxles so that the flat sides of the valve face left and right (Tow position 1).

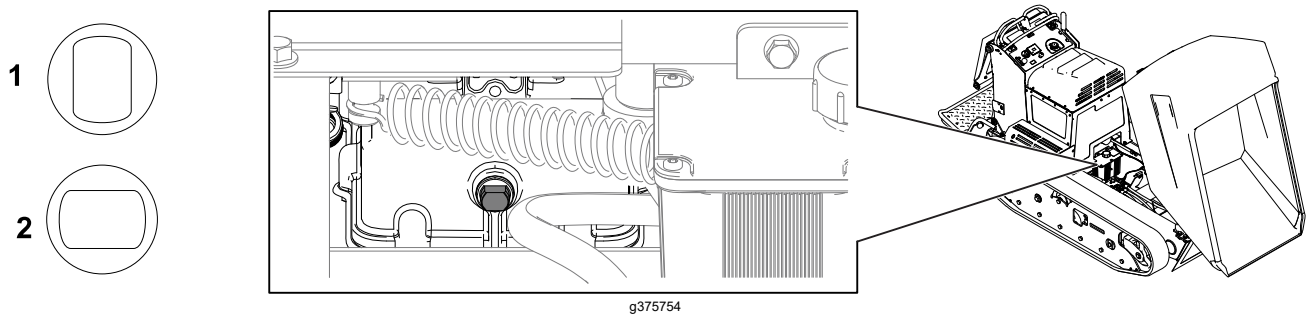


g375754

4. Tow the machine as required.
5. After repairing the machine, turn the bypass valves so that the flat sides face up and down (drive position 2).
6. Remove the cylinder lock and lower the hopper.

# Lifting the Machine

Ensure that the hopper is empty before lifting the machine.

1. Place the platform in the raised position.
2. Rotate the hopper and hoist the machine using the lifting points.

   **Note:** Take up the slack in the chain or straps to properly balance the unit.

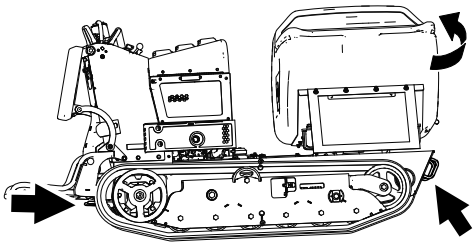

G324717

# Releasing the Cushion for Rear Access

1. Lower the platform.
2. Loosen the twist knobs (1) on each side of the machine.
3. Remove the cushion (2) and lower it to the platform.
4. Perform any maintenance or adjustment on the machine.
5. Raise the cushion, and slide it onto the pins on both sides of the machine.
6. Tighten the twist knobs.

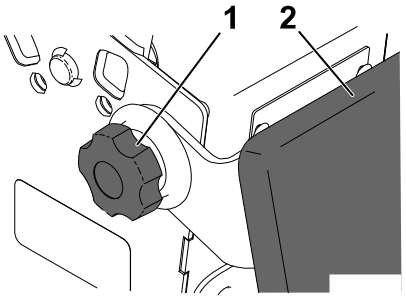


g032556

# Using the Cylinder Lock

## Installing the Cylinder Lock

1. Park the machine on a level surface, move the motion-control levers to the NEUTRAL-LOCK position, engage the parking brake, and fully raise the hopper.
2. Remove the 2 cotterless pins securing the cylinder lock to the machine.

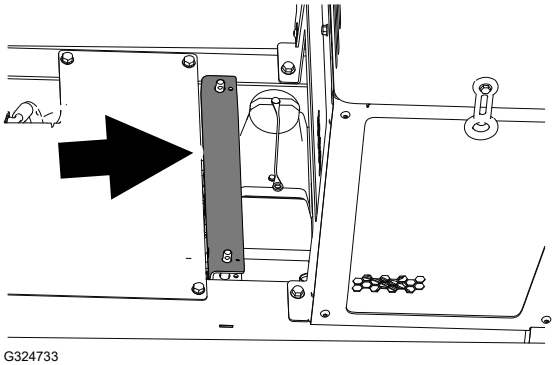

G324733

# Using the Cylinder Lock (continued)

3. Slide the cylinder lock over the lift-cylinder rod and secure with the cotterless pins.

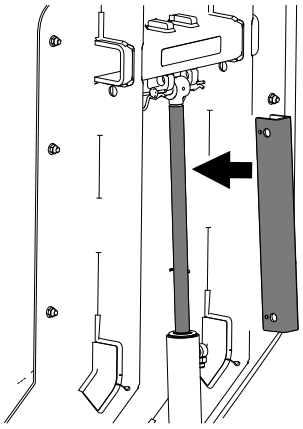
G324856

## Removing and Storing the Cylinder Lock

**IMPORTANT**

**Remove the cylinder lock from the lift-cylinder rod and fully secure it in the storage position before operating the machine.**

1. Start the machine.
2. Fully raise the hopper.
3. Shut off the engine.
4. Remove the cotterless pins securing the cylinder lock.
5. Place the cylinder lock on the posts inside the machine frame and secure with the cotterless pins.
6. Lower the hopper.

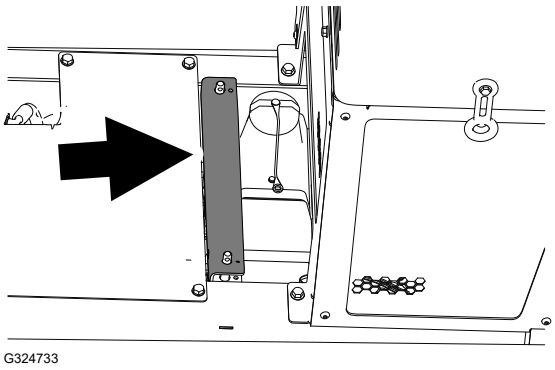
G324733

# Lubrication

## Greasing the Machine

**Grease Type:** General-purpose grease.

**Note:** Remove the blue protection caps, if applicable, before greasing and replace when finished.

1. Park the machine on a level surface and engage the parking brake.
2. Shut off the engine and allow the engine to cool.
3. Clean the grease fittings with a rag.
4. Connect a grease gun to each fitting.

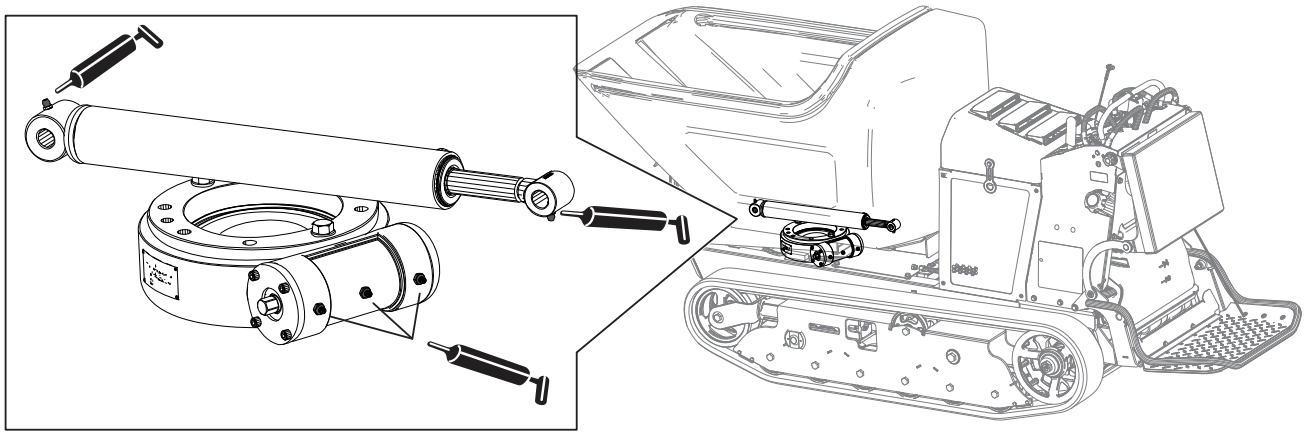

G376193

5. Pump grease into the fittings until grease begins to ooze out of the bearings (approximately 3 pumps).
6. Wipe up any excess grease.

# Engine Maintenance

## Servicing the Air Cleaner

**IMPORTANT**

**Do not operate the engine without the air-cleaner element. Operating without an element causes damage to the engine.**

1. Rotate the latches (2) outward.
2. Remove the cover (1) to access the air-cleaner elements.
3. Remove the cover to access the air-cleaner elements.
4. Remove the foam element (4) from the paper element (3).
5. Service the foam element (4).
   A. Wash the foam element in warm water and detergent.
   B. Rinse it and allow it to air dry.
   C. Lightly oil the foam element with new oil and squeeze out excess oil.
6. Service the paper element (3).

   Gently tap the paper element to dislodge dirt.

   **Note:** Do not wash the paper element or use pressurized air, as this damages the element.

   **Note:** Replace a dirty, bent, or damaged element. Handle the new element carefully; do not use if the sealing surfaces are bent or damaged.
7. Install the elements.
   A. Install the foam element onto the paper element.
   B. Install the elements onto the air-cleaner base.
   C. Install the cover, and secure it with the latches.

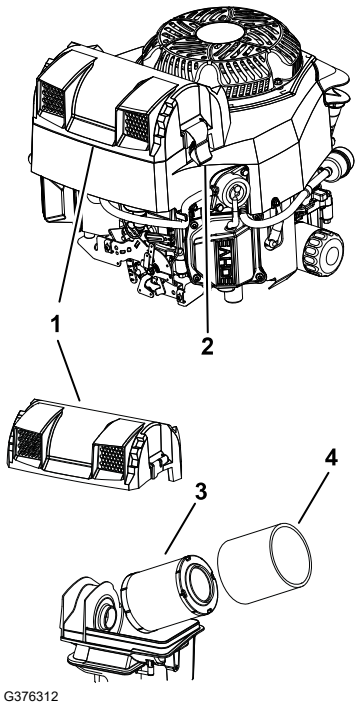

# Engine Oil Service

## Engine Oil Specifications

| | |
|---|---|
| **Crankcase capacity:** | 1.9 L (64 fl oz) |
| **Oil type:** | API classification SJ or later. |
| **Oil viscosity:** | Selected the oil viscosity according to ambient temperature in the table below. |

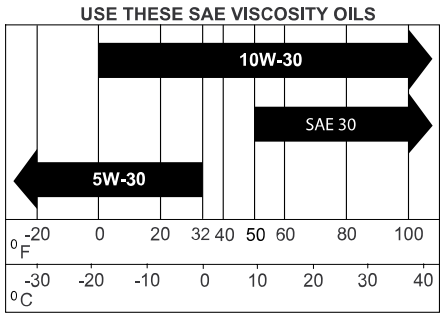


g017552s

## Checking the Engine-Oil Level

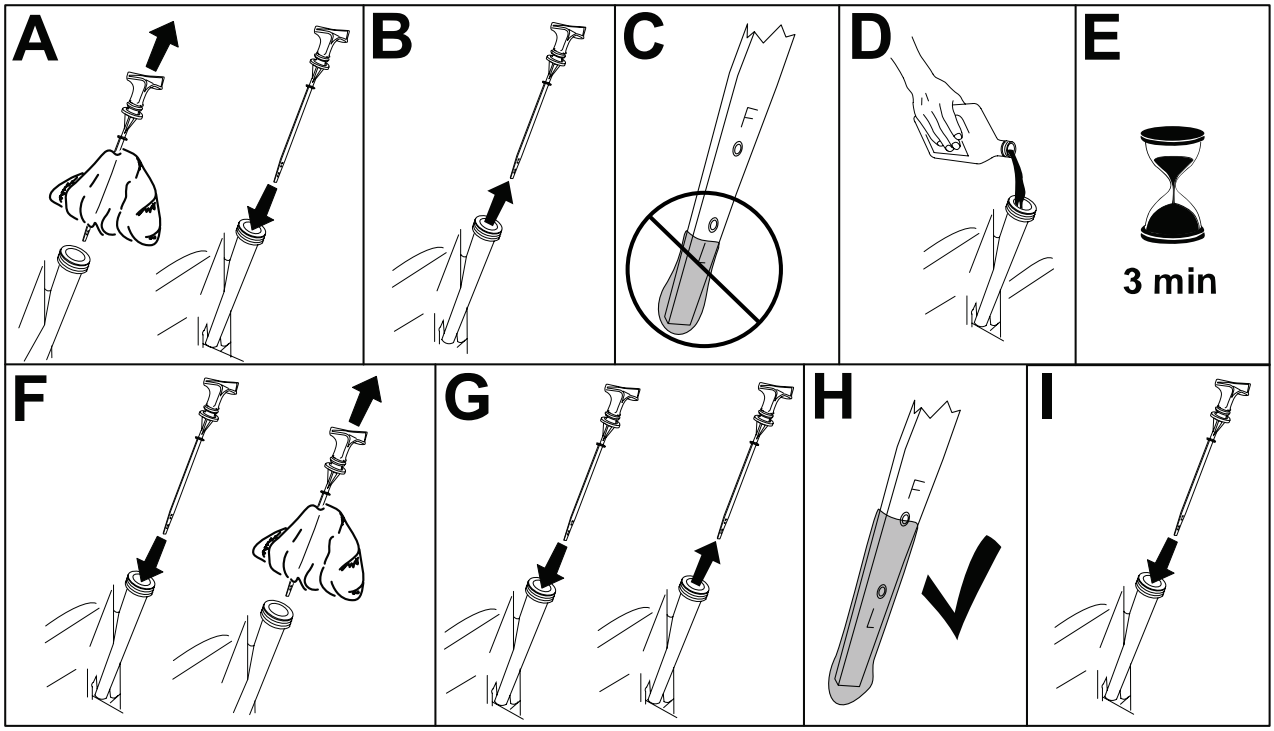


G376333

1. Park the machine on a level surface, move the motion-control levers to the NEUTRAL-LOCK position, engage the parking brake, and lower the hopper.
2. Shut off the engine, and remove the key. Allow the engine to cool.
3. Open the cowl.
4. Check the engine-oil level.

# Engine Oil Service (continued)

## Changing the Engine Oil and Filter

1. Park the machine on a level surface, move the motion-control levers to the NEUTRAL-LOCK position, engage the parking brake, raise the hopper, and install the cylinder lock.
2. Shut off the engine and remove the key.
3. Perform the following steps to change the engine oil:
   A. Remove the drain plug and allow all of the existing oil to drain out of the engine.



   B. Install the drain plug. Torque the plug to **13.6 N·m (10 ft-lb)**.
4. Change the engine-oil filter.

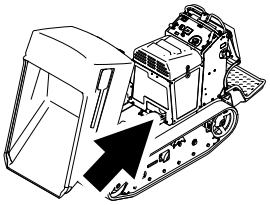

g185888

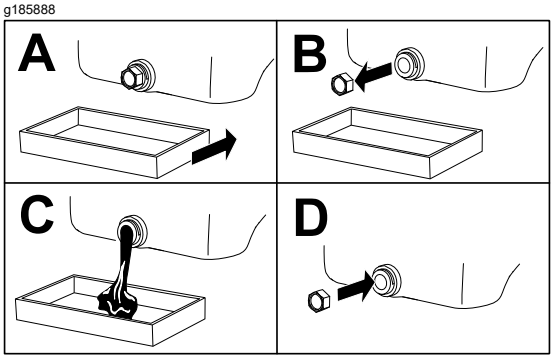


g031623

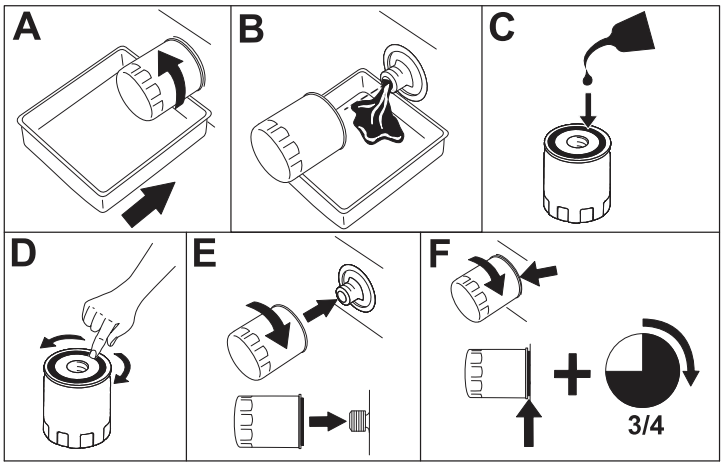


G376169

5. Slowly pour approximately 80% of the specified oil into the filler tube.

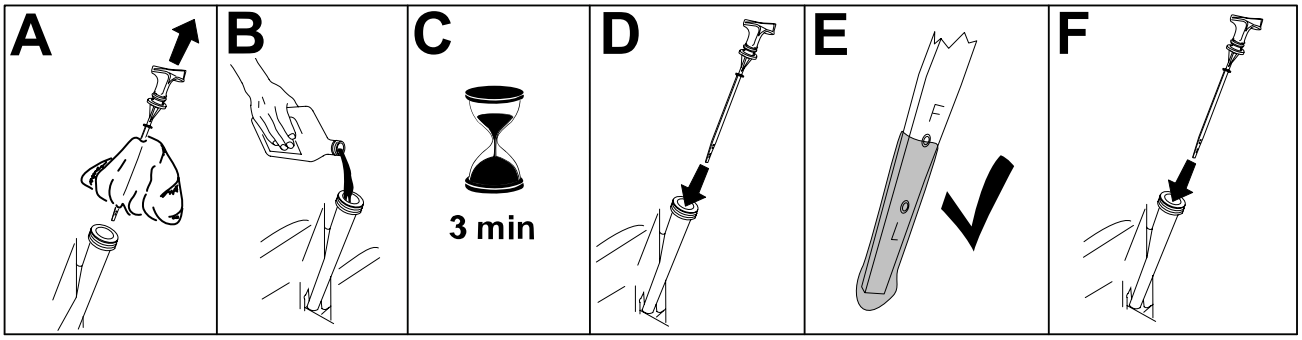


G381006

# Replacing the Spark Plug

1. Remove the spark-plug wire.
2. Clean around spark plug and remove plug from cylinder head.

   **Note:** Replace a cracked, fouled, or dirty spark plug. Do not sand blast, scrape, or clean electrodes because engine damaged could result from grit entering the cylinder.
3. Set the air gap at 0.70 to 0.80 mm (0.028 to 0.031 inch) (1). Install the spark plug carefully by hand to avoid cross-threading.

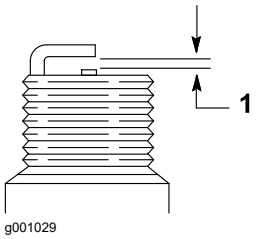


4. After the spark plug is seated, tighten it with a spark plug wrench to compress the sealing washer.
5. When installing a new spark plug, tighten 1/2 turn after the spark plug seats to compress the washer.
6. When installing the original spark plug, tighten 1/8 to 1/4 turn after the spark plug seats to compress the washer.

   **Note:** A loose spark plug can overheat and damage the engine. Overtightening the spark plug can damage the threads in the cylinder head.
7. Connect the spark-plug wire.

# Cleaning the Blower Housing

To ensure proper cooling, ensure that the cooling fins and other external surfaces of the engine are kept clean at all times.

Ensure that the cooling shrouds are installed.

**IMPORTANT**

**Operating the engine with dirty or plugged cooling fins and/or cooling shrouds removed causes engine damage due to overheating.**

# Fuel System Maintenance

## Replacing the Fuel Filter

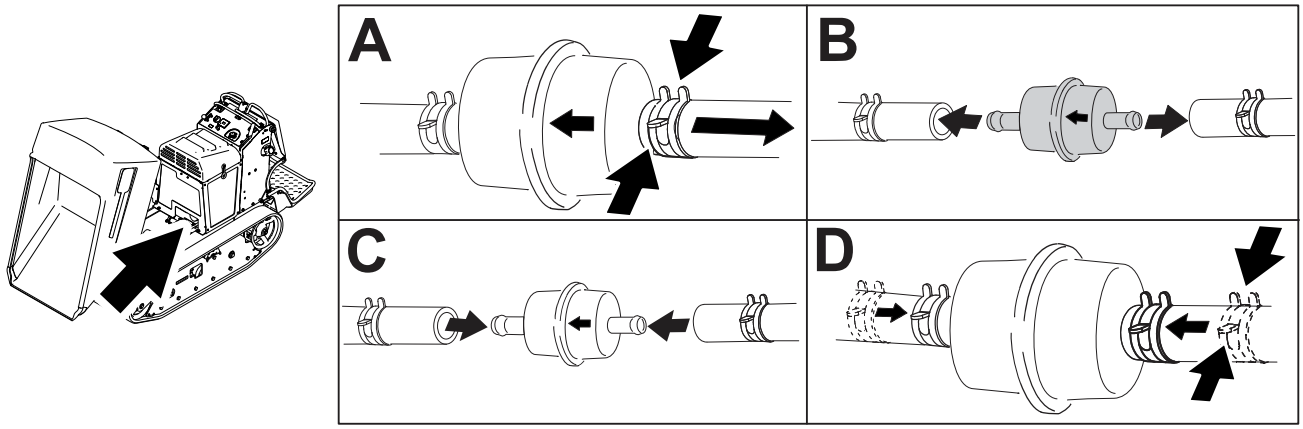


G376153

1. Park the machine on a level surface, move the motion-control levers to the NEUTRAL-LOCK position, engage the parking brake, and lower the hopper.
2. Shut off the engine, and remove the key. Allow the engine to cool.
3. Replace the fuel filter.

## Draining the Fuel Tank

You can drain the fuel tank by either siphoning the fuel out or removing the fuel tank and pouring the fuel out of the fill neck.

1. Park the machine on a level surface, move the motion-control levers to the NEUTRAL-LOCK position, engage the parking brake, and lower the hopper.
2. Shut off the engine, and remove the key. Allow the engine to cool.
3. Clean around the fuel cap (1) to prevent debris from getting into the fuel tank.
4. Remove the fuel cap.
5. Insert a syphon pump into the fuel tank.
6. Using the syphon pump, drain the fuel into a clean fuel can.
7. Wipe up any spilled fuel.

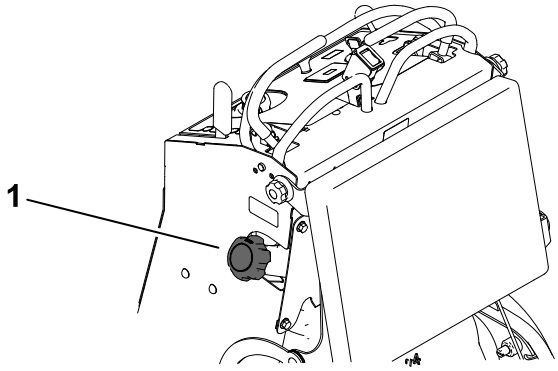


G186224

# Removing the Fuel Tank

1. Lower the platform.
2. Release the cushion.
3. Remove the cross bracket (2).
4. Remove the fuel tank (1) and set it on the operator platform.

   **Note:** Remove the fuel and vent lines from the top of the tank to move the fuel tank further from the machine.

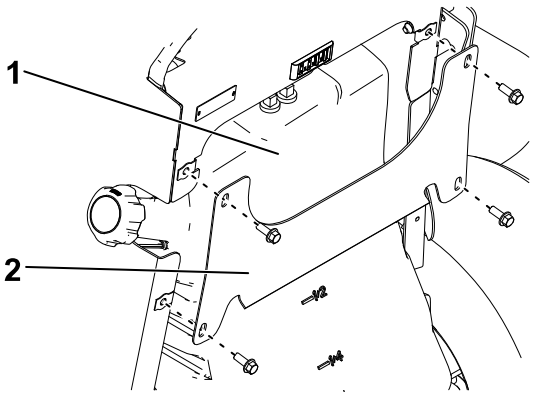

G186223

# Electrical System Maintenance

## Electrical System Safety

- Disconnect the battery before repairing the machine. Disconnect the negative terminal first and the positive last. Connect the positive terminal first and the negative last.
- Charge the battery in an open, well-ventilated area, away from sparks and flames. Unplug the charger before connecting or disconnecting the battery. Wear protective clothing and use insulated tools.
- Battery acid is poisonous and can cause burns. Avoid contact with skin, eyes, and clothing. Protect your face, eyes, and clothing when working with a battery.
- Battery gases can explode. Keep cigarettes, sparks, and flames away from the battery.

## Battery Service

### Removing the Battery

1. Park the machine on a level surface, move the motion-control levers to the NEUTRAL-LOCK position, engage the parking brake, and lower the hopper.
2. Shut off the engine, and remove the key. Allow the engine to cool.
3. Remove the negative battery cable (4) from the battery.
4. Remove the positive battery cable (1) from the battery.
5. Remove the 2 wing nuts (3), securing rod (2), and the battery.

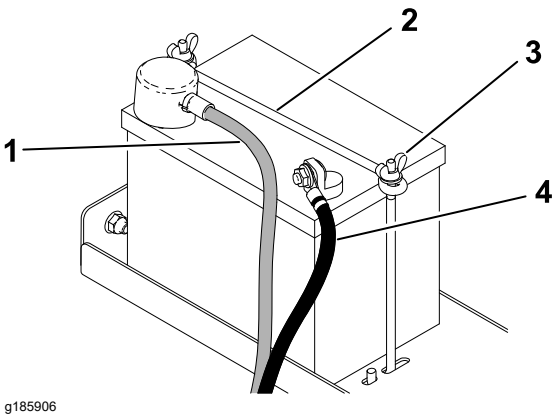

g185906

# Battery Service (continued)

## Charging the Battery

**⚠ WARNING ⚠**

**Charging the battery produces gasses that can explode.**

**Never smoke near the battery and keep sparks and flames away from battery.**

**IMPORTANT**

**Always keep the battery fully charged (1.265 specific gravity). This is especially important to prevent battery damage when the temperature is below 0°C (32°F).**

1. Remove the battery from the machine.
2. Perform the following steps to check the electrolyte level:
   A. Ensure that the cell covers are free from dirt and debris.

   **IMPORTANT**

   **Dirt and debris that enters the battery cells causes damage to the battery.**

   B. Remove the covers from the top of the cells.
   C. Ensure that the electrolyte solution covers the lead plates. Use distilled water to top off the solution level, if needed.
3. Ensure that the filler caps are installed on the battery.
4. Charge the battery for 1 hour at 25 to 30 A or 6 hours at 4 to 6 A.

**IMPORTANT**

**Do not overcharge the battery.**

# Battery Service (continued)

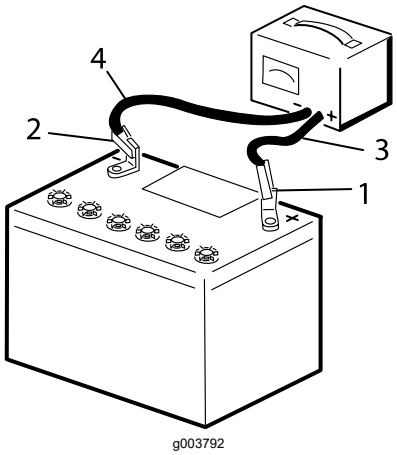


1. Positive battery post
2. Negative battery post
3. Red (+) charger lead
4. Black (-) charger lead

5. When the battery is fully charged, unplug the charger from the electrical outlet, and disconnect the charger leads from the battery posts.
6. Install the battery onto the machine and connect the battery cables.

   **Note:** Do not run the machine with the battery disconnected; electrical damage may occur.

## Installing the Battery

1. Place the battery on the platform and secure it using the 2 wing nuts 3 and the securing rod 2.
2. Install the positive battery cable 1 to the battery.
3. Install the negative battery cable 4 to the battery.

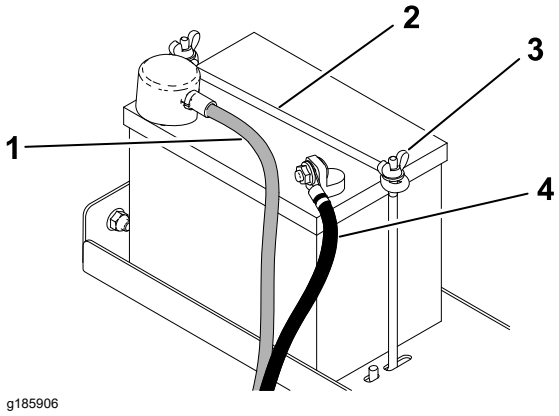

# Replacing a Fuse

The electrical system is protected by fuses and requires no maintenance. If a fuse blows, check the component or circuit for a malfunction or short.

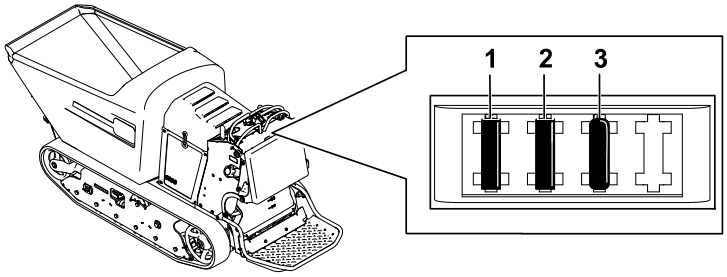


1. Main power fuse (15 A)
2. Auxiliary power fuse (15 A)
3. Logic fuse (7.5 A)

1. Release the cushion from the rear of the machine.
2. Pull out the fuse to remove or replace it.
3. Install the cushion to the rear of the machine.

   **Note:** Ensure that the correct-size fuse is installed.

If a fuse blows a second time, check the component/circuit for a malfunction or a short or contact your Authorized Service Dealer.

# Drive System Maintenance

## Track Service

### Cleaning the Tracks

1. Park the machine on a level surface, move the motion-control levers to the NEUTRAL-LOCK position, engage the parking brake, and lower the hopper.
2. Shut off the engine, and remove the key. Allow the engine to cool.
3. Lift/support the side of the machine to be worked on so that the track is 7.6 to 10 cm (3 to 4 inches) off the ground.
4. Using a water hose or pressure washer, remove dirt from each track system.

**IMPORTANT**

**Ensure that you use high-pressure water to wash only the track area. Do not use a high-pressure washer to clean the rest of the machine. Do not use high-pressure water between the drive sprocket and the machine or you may damage the motor seals. High-pressure washing can damage the electrical system and hydraulic valves or deplete grease.**

# Track Service (continued)

**IMPORTANT**

**Ensure that you fully clean the road wheels, the front wheel, and the drive sprocket. The road wheels should rotate freely when clean.**

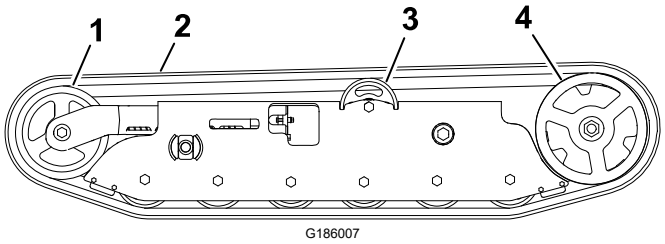


G186007

1. Front wheel
2. Track
3. Road wheel
4. Drive sprocket

## Checking the Track Tension

Place the tab 1 of the tensioning tool 3 along the rear edge of the tension nut 4, the other end of the tensioning tool should align with the edge of the tension arm 2. If the distance is not correct, adjust the track tension

**Note:** If the tensioning tool is not available, the distance between the nut and edge of the tension arm should be 7.1 cm (2-13/16 inches).

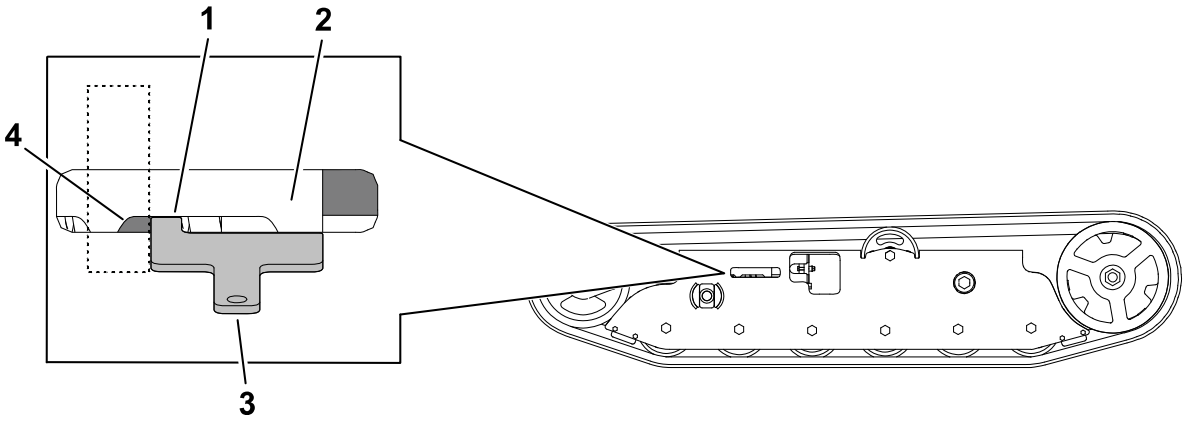


G376373

# Track Service (continued)

## Adjusting the Track Tension

1. Park the machine on a level surface, move the motion-control levers to the NEUTRAL-LOCK position, engage the parking brake, and lower the hopper.
2. Shut off the engine, and remove the key. Allow the engine to cool.
3. Clean the tracks with high-pressure water.

**IMPORTANT**

**Ensure that you use high-pressure water to wash only the track area. Do not use a high-pressure washer to clean the rest of the machine. Do not use high pressure water between the drive sprocket and the machine or you may damage the motor seals. High-pressure washing can damage the electrical system and hydraulic valves or deplete grease.**

4. Raise the machine so that the tracks are off the ground.
5. Clean the drive sprocket, the front wheel, and the road wheels. The road wheels should spin freely when clean.
6. Remove the bolt (1/4 x 1-5/8 inches) (4), spacer (5), and nut (6).
7. Turn the tensioning bolt (3) to adjust the distance between the tension nut (1) and the end tangent of the tension tube until the distance is correct.
8. Align the closest notch in the tensioning bolt to the bolt hole and secure the tensioning bolt with the bolt (1/4 x 1-5/8 inches), spacer, and nut.

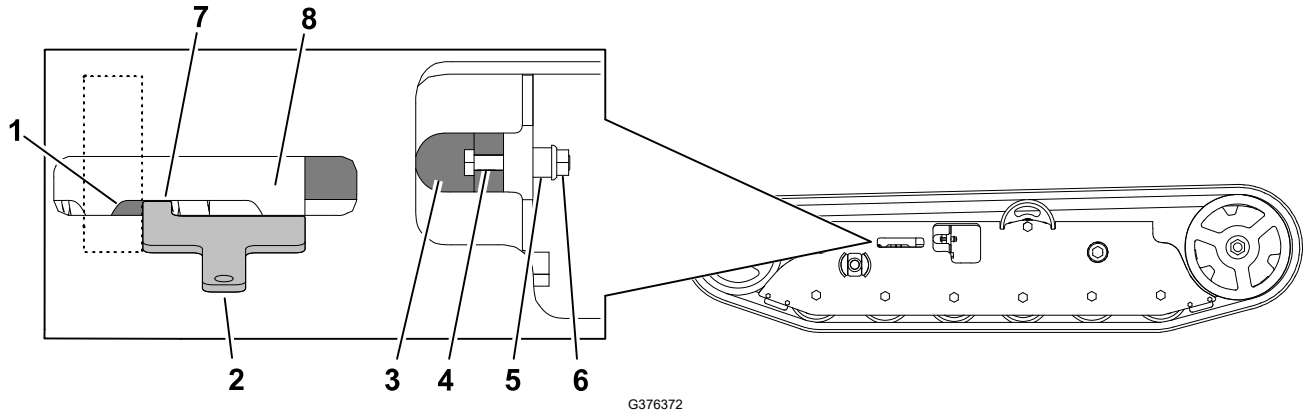


## Replacing the Tracks

### Removing a Track

1. Park the machine on a level surface, move the motion-control levers to the NEUTRAL-LOCK position, engage the parking brake, and lower the hopper.
2. Shut off the engine, and remove the key. Allow the engine to cool.
3. Lift/support the side of the machine to be worked on so that the track is 7.6 to 10 cm (3 to 4 inches) off the ground.

# Track Service (continued)

4. Remove the retaining bolt for the tensioning screw.

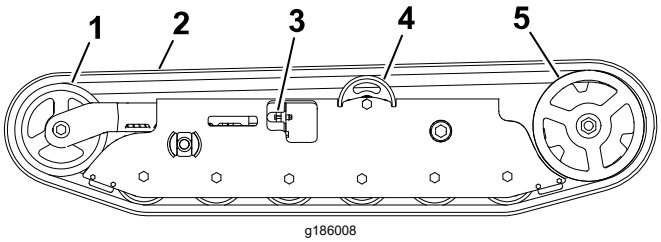


1. Front wheel
2. Track
3. Tensioning screw and retaining bolt
4. Road wheel
5. Drive sprocket

5. Release the drive tension by turning the tensioning screw clockwise.
6. Remove the track at the top of the front wheel, peeling it off the wheel while rotating the track forward.
7. When the track is off the front wheel, remove it from the drive sprocket and road wheels.
8. Inspect the condition of the wheels. If the wheels show signs of wear, replace them at this time.

## Installing a Track

1. Park the machine on a level surface, move the motion-control levers to the NEUTRAL-LOCK position, engage the parking brake, and lower the hopper.
2. Shut off the engine, and remove the key. Allow the engine to cool.
3. Lift/support the side of the machine to be worked on.

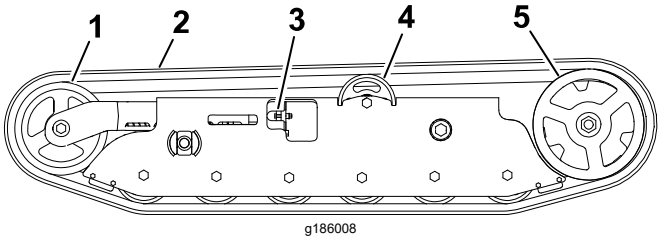


1. Front wheel
2. Track
3. Tensioning screw and retaining bolt
4. Road wheel
5. Drive sprocket

4. Beginning at the drive sprocket, coil the new track around the sprocket, ensuring that the lugs on the track fit between the spacers on the sprocket.
5. Push the track under the lugs and between the road wheels.
6. Starting at the bottom of the front wheel, install the track around the wheel by rotating the track rearward while pushing the lugs into the wheel.
7. Tension the track.
8. Lower the machine to the ground.

# Drive Belt

## Inspecting the Drive Belt

1. Park the machine on a level surface, move the motion-control levers to the NEUTRAL-LOCK position, engage the parking brake, and lower the hopper.
2. Shut off the engine, and remove the key. Allow the engine to cool.
3. Release the cushion and remove the fuel tank.
4. Inspect the belt. Replace the belt if it is worn.

   **Note:** The signs of a worn belt include squealing while the belt is rotating, frayed edges, burn marks, and cracks on the belt.

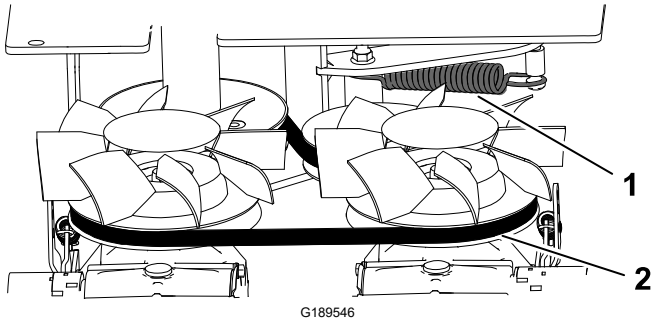


1. Extension spring
2. Belt

## Replacing the Drive Belt

1. Park the machine on a level surface, move the motion-control levers to the NEUTRAL-LOCK position, engage the parking brake, and lower the hopper.
2. Shut off the engine, and remove the key. Allow the engine to cool.
3. Release the cushion and remove the fuel tank.
4. Raise the rear of the machine and support the machine on jack stands.
5. Remove the skid plate.

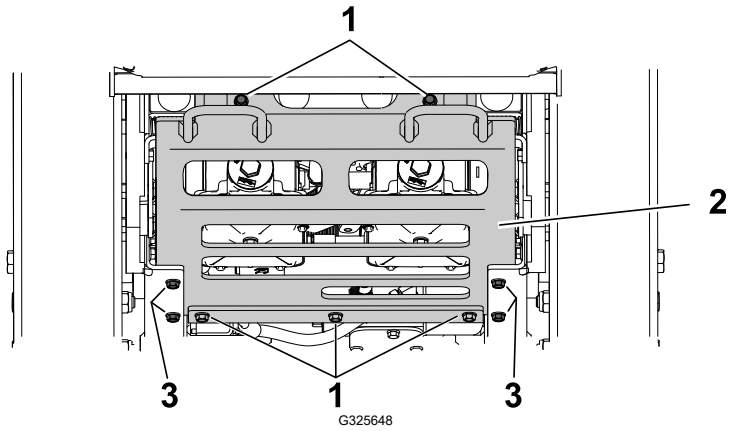


1. Rear bolt (2)
2. Skid plate
3. Side bolt (4)

6. Remove the extension spring.
7. Remove the 2 bolts and 2 nuts and loosen the 2 set screws on the coupler. Remove the gear pump from the pump mount.

# Drive Belt (continued)

**Note:** You do not need to remove the fittings from the pump.

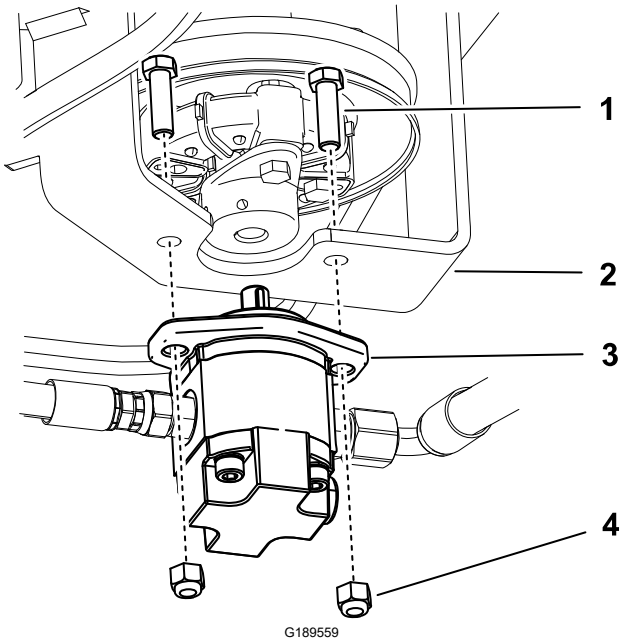


1. Bolt (2)
2. Pump mount
3. Gear pump
4. Nut (2)

8. Remove the drive belt from the engine pulley and 2 transmission pulleys.

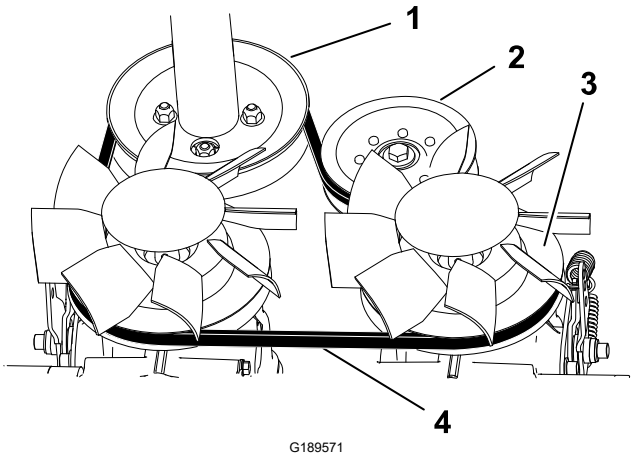


1. Engine pulley
2. Idler pulley
3. Transmission pulley (2)
4. Belt

9. Route the new belt around the engine pulley and 2 transmission pulleys.
10. Install the gear pump.
11. Install the extension spring.
12. Install the fuel tank.
13. Raise the cushion.

# Controls Maintenance

## Adjusting the Motion-Control Levers

If the motion-control levers do not align horizontally, adjust the right side motion-control lever.

1. Park the machine on a level surface, lower the hopper, engage the parking brake, shut off the engine, and remove the key.
2. Push the motion-control levers down out of the NEUTRAL-LOCK position.
3. Check if the right motion-control lever aligns horizontally with the left motion-control lever.

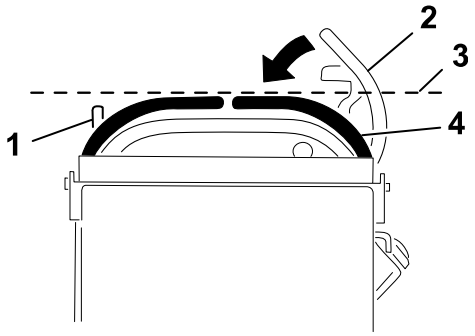

G009436

(1) Left motion-control lever

(2) Right motion-control lever in the Neutral-lock position

(3) Check the horizontal alignment here

(4) Right motion-control lever

4. Release the cushion from the rear of the machine.
5. Loosen the nut (2) holding the cam (1).
6. Adjust the cam until it aligns with the left motion-control lever and tighten the nut for the cam.

   **Note:** Moving the cam clockwise (in the vertical position) lowers the handle; moving the cam counterclockwise (in the vertical position) raises the handle.

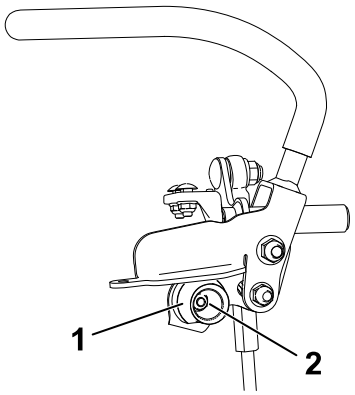

G189389

**IMPORTANT**

**Ensure that the flat portion of the cam does not go above a vertical position (right or left); otherwise you may damage the switch.**

7. Repeat Step 2 through Step 6 for the left motion-control lever.

# Brake Maintenance

## Checking the Parking Brake

1. Park the machine on a level surface, lower the hopper, and engage the parking brake.
2. Start the engine and move the throttle lever to the FAST position.
3. Move the motion-control levers forward.

   The machine should not move forward.

   If the machine moves forward, adjust the parking brake.
4. Release the parking brake.
5. Move the motion-control levers forward.

   The machine should move forward.

   If the machine does not move forward, adjust the parking brake.
6. Engage the parking brake and shut off the machine.

## Adjusting the Parking Brake

1. Remove the fuel tank.
2. Inside the left side of the control tower, adjust the nuts (2) until the cables (1) are taught.
3. Install the fuel tank, cross bracket, and cushion.

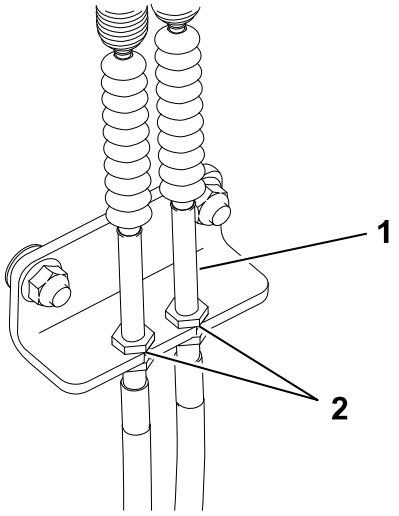

# Hydraulic System Maintenance

## Hydraulic Drive System

### Hydraulic Drive System Fluid Specifications

| | |
|---|---|
| **Hydraulic-fluid type:** | Toro® HYPR-OIL™ 500 |
| **Hydraulic-fluid capacity between the two transaxles:** | 6.2 L (5.5 US qt) |

Use each of the following fluids as specified for the hydraulic system:

- For the traction circuit, use **Toro® HYPR-OIL™ 500** (refer to your Authorized Service Dealer for more information)
- For the lift circuit, use **Toro PX Extended Life Hydraulic Fluid** (refer to your Authorized Service Dealer for more information)
- If **Toro PX Extended Lift Hydraulic Fluid** is not available, you may use another **conventional, petroleum-based** hydraulic fluid. The specifications must fall within the listed range for all the following material properties and the fluid should meet the industry standards. Do not use synthetic fluid. Consult with your hydraulic fluid supplier to determine if the fluid meets these specifications.

  **Note:** Toro does not assume responsibility for damage caused by improper substitutions, use only products from reputable manufacturers who will stand behind their recommendations.

| **Material Properties** | |
|---|---|
| Viscosity, ASTM D445 | cSt @ 40°C (104°F) 44 to 48 |
| Viscosity index, ASTM D2270 | 140 or higher |
| Pour Point, ASTM D97 | -37 to -45°C (-34 to -49°F) |
| **Industry Standards** | |
| Eaton Vickers 694 (I-286-S, M-2950-S/35VQ25 or M-2952-S) | |

**Note:** Many hydraulic fluids are almost colorless, making it difficult to spot leaks. A red dye additive for the hydraulic system fluid is available in 20 ml (0.67 fl oz) bottles. One bottle is sufficient for 15 to 22 L (4 to 6 US gallons) of hydraulic fluid. Order Part No. 44-2500 from your Authorized Toro Dealer.

# Hydraulic Drive System (continued)

## Checking the Hydraulic-Fluid Level for the Drive System

1. Park the machine on a level surface, move the motion-control levers to the NEUTRAL-LOCK position, engage the parking brake, and lower the hopper.
2. Shut off the engine, and remove the key. Allow the engine to cool.
3. Open the cowl.
4. Use the sight window to check the fluid level in the expansion tank.

   **Note:** The fluid level should be at the fill line on the decal.

5. If the oil level is low, remove the cap lock (1) and cap (2) from the top of the expansion tank and add enough of the specified hydraulic fluid to raise it to the proper level.

   **Note:** Ensure that the expansion-tank fluid level is at the proper level. Overfilling the tank may cause fluid to purge out of the breather hole.

6. Install the cap and cap lock. Wipe up any spilled hydraulic fluid.

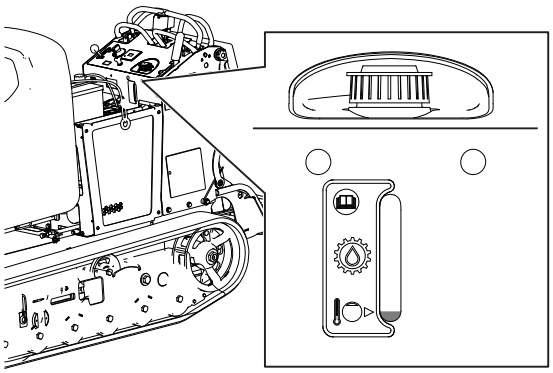

G376100

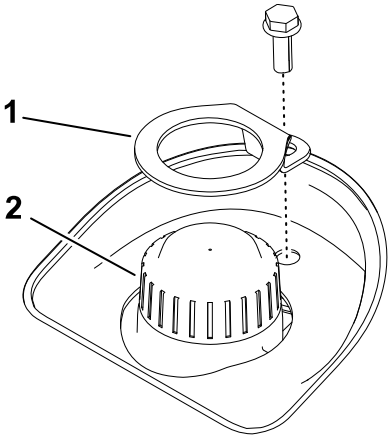


G376099

# Hydraulic Drive System (continued)

## Changing the Hydraulic Fluid and Filter for the Drive System

1. Park the machine on a level surface, move the motion-control levers to the NEUTRAL-LOCK position, engage the parking brake, and lower the hopper.
2. Shut off the engine, and remove the key. Allow the engine to cool.
3. Lower the cushion and remove the fuel tank.
4. Remove the 9 bolts (5 rear ①, 4 side ③) from the skid plate ② and remove the skid plate.
5. Locate the drain plug ⑤ in the bottom of each transmission, then place a drain pan under the plugs.
6. Remove the drain plugs and allow the hydraulic fluid to fully drain from the machine.
7. Remove the hydraulic-filter cap and hydraulic filter ④ from each transmission.
8. Install a new hydraulic filter with the spring side facing out and the hydraulic-filter cap for each transmission.

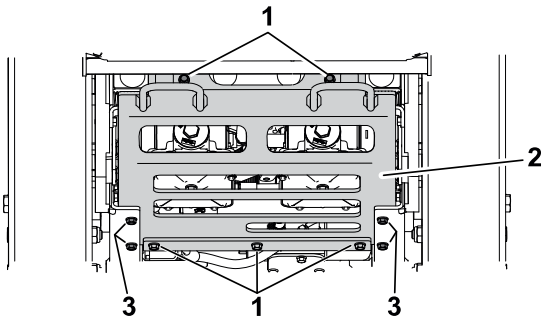


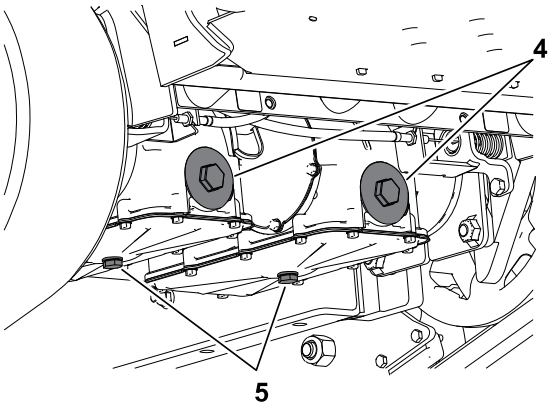


9. Torque to **13 to 15 N·m (115 to 135 in-lb)**.
10. Install the drain plugs.
11. Loosen the vent plug ⑥ in each transmission until loose.

    **Note:** This allows air to escape the hydraulic system as you add hydraulic fluid.
12. Slowly add approximately 6.2 L (208 fl oz) fluid to the expansion tank until it starts to come out of the vent plugs.

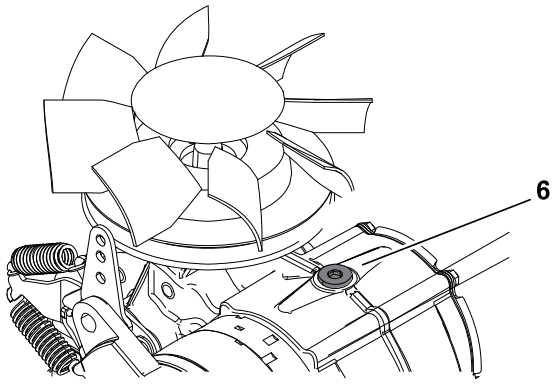


**IMPORTANT**

**Use the fluid specified or equivalent. Other fluids could cause system damage.**

**IMPORTANT**

**Monitor the level of fluid in the expansion tank so that you do not overfill it.**

13. Tighten the vent plugs.

14. Add hydraulic fluid to the expansion tank until it reaches the fluid line.

**IMPORTANT**

**Do not overfill.**

15. Install the expansion-tank cap.
16. Install the skid plate.
17. Install the fuel tank.
18. Start the engine and let it run for about 2 minutes to purge air from the system.
19. Shut off the engine and check for leaks.

## Bleeding the Hydraulic Drive System

Bleed the traction hydraulic system whenever you perform service or maintenance on the hydrostatic transmission or add hydraulic fluid to the expansion tank.

1. Park the machine on a level surface, move the motion-control levers to the NEUTRAL-LOCK position, engage the parking brake, and lower the hopper.
2. Shut off the engine, and remove the key. Allow the engine to cool.
3. Check the hydraulic fluid level and add hydraulic fluid as necessary.
4. Support the machine on jack stands, high enough to raise the tracks off the ground.
5. Start the machine. Slowly move the motion-control levers forward and reverse 5 to 6 times.
6. Check the hydraulic fluid level and add hydraulic fluid as necessary.
7. Repeat Step 5 and Step 6 as necessary until all the air is completely purged from the system.

   **Note:** Purging is complete when you obtain normal forward and reverse speed.
8. Lower the machine and repeat the procedure with the tracks on the ground.

# Hydraulic Lift and Slew System

## Hydraulic Lift and Slew System Fluid Specifications

| | |
|---|---|
| **Hydraulic-Fluid type:** | Toro Premium All Season Hydraulic Fluid or Mobil® 424 Hydraulic Fluid |
| **Hydraulic fluid capacity:** | 6.6 L (1.75 US gallons) |

Use only 1 of the following fluids in the hydraulic system:

- **Toro Premium Transmission/Hydraulic Tractor Fluid** (refer to your Authorized Service Dealer for more information)

- **Toro PX Extended Life Hydraulic Fluid** (refer to your Authorized Service Dealer for more information)
- If either of the above Toro fluids are not available, you may use another **Universal Tractor Hydraulic Fluid (UTHF)**, but they must be only **conventional, petroleum-based** products. The specifications must fall within the listed range for all the following material properties and the fluid should meet the listed industry standards. Check with your hydraulic fluid supplier to determine if the fluid meets these specifications.

  **Note:** Toro will not assume responsibility for damage caused by improper substitutions, so use only products from reputable manufacturers who will stand behind their recommendations.

| **Material Properties** | |
|---|---|
| Viscosity, ASTM D445 | cSt at 40°C: 55 to 62 |
| | cSt at 100°C: 9.1 to 9.8 |
| Viscosity index, ASTM D2270 | 140 to 152 |
| Pour Point, ASTM D97 | -37 to -43°C (-35 to -46°F) |
| **Industry Standards** | |
| API GL-4, AGCO Powerfluid 821 XL, Ford New Holland FNHA-2-C-201.00, Kubota UDT, John Deere J20C, Vickers 35VQ25 and Volvo WB-101/BM | |

**Note:** Many hydraulic fluids are almost colorless, making it difficult to spot leaks. A red dye additive for the hydraulic system fluid is available in 20 ml (2/3 fl oz) bottles. One bottle is sufficient for 15 to 22 L (4 to 6 US gallons) of hydraulic fluid. Order Part No. 44-2500 from your Authorized Toro Dealer.

## Checking the Hydraulic-Fluid Level for the Lift and Slew System

1. Park the machine on a level surface, move the motion-control levers to the NEUTRAL-LOCK position, engage the parking brake, rotate and raise the hopper, and install the cylinder lock.
2. Shut off the machine and remove the key. Allow the machine to cool completely.
3. Remove the filler cap from the reservoir tank.

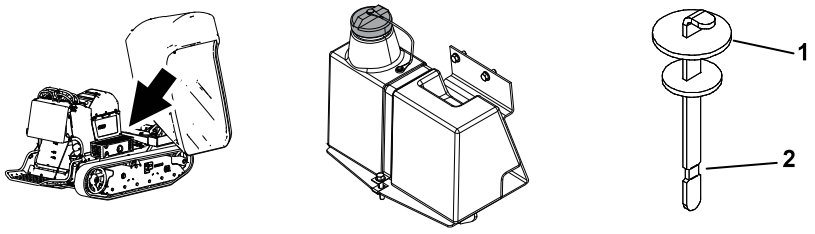


4. Remove the dipstick (1) from the filler neck and wipe it with a clean rag. Insert the dipstick into the filler neck; then remove it and check the level of the fluid. The fluid level should be up to the full mark (2) on the dipstick.
5. If the level is low, add the specified hydraulic fluid to raise the level to the full mark.

6. Install the dipstick and cap onto the filler neck.
7. Wipe up any spilled hydraulic fluid.
8. Remove the cylinder lock and lower the hopper.

## Changing the Hydraulic Fluid for the Lift and Slew System

1. Park the machine on a level surface, move the motion-control levers to the NEUTRAL-LOCK position, engage the parking brake, raise the hopper, and install the cylinder lock.
2. Shut off the machine and remove the key. Allow the machine to cool completely.
3. Remove the filler cap from the reservoir tank

**⚠ CAUTION ⚠**

**The hydraulic breather/filler cap is designed to pressurize the reservoir to 34 kPa (5 psi).**

**Loosen the cap slowly to avoid injury whenever adding fluid or working on the hydraulic system. Use a wrench on the hex ① directly under the cap.**

4. Place a large drain pan under the fittings at the bottom of the reservoir tank.
5. Disconnect a hose fitting and allow the fluid to drain into the pan.
6. When finished, install and tighten the fitting. Note: Dispose of the used fluid at a certified recycling center.
7. Fill the reservoir tank with approximately 5.9 L (200 fl oz) and install the filler cap.
8. Remove the cylinder lock.
9. Start the engine. Raise and lower the hopper 3 times to fill the cylinder and hoses with fluid.
10. Raise the hopper and install the cylinder lock.
11. Shut off the engine.
12. Add 0.73 L (25 fl oz) of hydraulic fluid and install the filler cap.

    **Note:** The fluid level should be at the Cold fill line. Do not fill past this line.
13. Remove the cylinder lock.
14. Start the engine. Raise and lower the hopper several times to remove air from the system.

## Replacing the Hydraulic Filter for the Lift and Slew System

**IMPORTANT**

**Do not substitute an automotive oil filter or severe hydraulic system damage may result.**

# Hydraulic Lift and Slew System (continued)

1. Park the machine on a level surface, move the motion-control levers to the NEUTRAL-LOCK position, engage the parking brake, raise the hopper, and install the cylinder lock.
2. Shut off the engine, and remove the key. Allow the engine to cool.
3. Replace the filter.

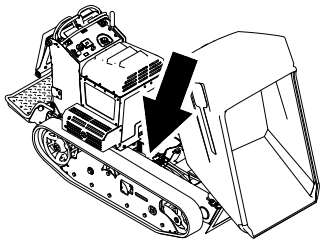

G186042

G376169

4. Start the engine and let it run for about 2 minutes to purge air from the system.
5. Shut off the engine and check for leaks.
6. Check the fluid level in the reservoir tank.

   **Note:** Do not overfill the reservoir tank.
7. Remove the cylinder lock and lower the hopper.

# Checking the Hydraulic Lines

Check the hydraulic lines for leaks, loose fittings, kinked lines, loose mounting supports, wear, and deterioration. Make necessary repairs before operating.

# Cleaning

## Removing Debris

**IMPORTANT**

**Operating the engine with blocked screens, dirty or plugged cooling fins, and/or cooling shrouds removed, will result in engine damage from overheating.**

1. Park the machine on a level surface and shut off the engine. Allow the engine to cool.
2. Unlatch and remove the cowl.
3. Clean any debris from under the hopper.
4. Wipe away debris from the air cleaner.
5. Clean any debris buildup on the engine and in the transmission with a brush or blower.

# Removing Debris (continued)

**IMPORTANT**

**It is preferable to blow dirt out rather than washing it out. If you use water, keep it away from electrical items and hydraulic valves.**

**Do not use a high-pressure washer. High-pressure washing can damage the electrical system and hydraulic valves or deplete grease.**

# Storage Safety

- Shut off the engine, remove the key (if applicable), wait for all moving parts to stop, and allow the machine to cool before storing it.
- Do not store the machine or fuel near flames.

# Preparing the Machine for Storage Over 30 Days

1. Park the machine on a level surface, engage the parking brake, and lower the hopper.
2. Shut off the engine and remove the key.
3. Remove dirt and grime from the entire machine.

**IMPORTANT**

**You can wash the machine with mild detergent and water. Do not pressure-wash the machine. Avoid excessive use of water, especially near the control panel, engine, hydraulic pumps, and motors.**

4. Service the air cleaner.
5. Grease the machine.
6. Change the engine oil.
7. Prepare the fuel system.
   A. Add a petroleum-based fuel stabilizer/conditioner to the fuel in the tank. **Do not use an alcohol-based stabilizer (ethanol or methanol).**
   B. Run the engine to distribute conditioned fuel through the fuel system for 5 minutes.
   C. Shut off the engine, allow it to cool, and drain the fuel tank using a pump-type syphon.
   D. Start the engine and run it until it shuts off.
   E. Choke the engine.
   F. Start and run the engine until it does not start again.
   G. Dispose of fuel properly. Recycle as per local codes.

## IMPORTANT

**Do not store fuel containing stabilizer/conditioner longer than the duration recommended by the fuel-stabilizer manufacturer.**

8. Prepare the engine.
   A. With the spark plugs removed from the engine, pour 2 tablespoons of engine oil into the spark plug holes.
   B. Place a rag over the spark plug holes to catch any oil spray, then turn the key to crank the engine and distribute the oil inside the cylinder.
   C. Install the spark plugs.

      **Note:** Do not install the wire on the spark plugs.
9. Check and tighten all fasteners. Repair or replace any worn, damaged, or missing parts.
10. Paint all scratched or bare metal surfaces with paint available from your Authorized Service Dealer.
11. Store the machine in a clean, dry garage or storage area. Remove the key from the ignition switch and keep it in a memorable place.
12. Cover the machine to protect it and keep it clean.

## The engine loses power.

| Possible Cause | Corrective Action |
|---|---|
| The engine load is excessive. | Reduce the ground speed. |
| The air cleaner is dirty. | Service the air-cleaner element. |
| The oil level in the crankcase is low. | Add oil to the crankcase. |
| The cooling fins and air passages under the engine blower housing are plugged. | Remove the obstruction from the cooling fins and air passages. |
| A spark plug is pitted, fouled, or the gap is incorrect. | Install a new, correctly gapped spark plug. |
| The vent hole in the fuel cap is plugged. | Clean or replace the fuel cap. |
| Dirt is in the fuel filter. | Replace the fuel filter. |
| Dirt, water, or stale fuel is in the fuel system. | Contact an Authorized Service Dealer. |

## The engine does not start, starts hard, or fails to keep running.

| Possible Cause | Corrective Action |
|---|---|
| The fuel tank is empty or the shutoff valve is closed. | Fill the fuel tank with fuel and open the valve |
| A spark-plug wire is loose or disconnected. | Install the wire on spark plug. |
| A spark plug is pitted, fouled, or the gap is incorrect. | Install a new, correctly gapped spark plug. |
| The air cleaner is dirty. | Service the air-cleaner element. |
| Dirt is in the fuel filter. | Replace the fuel filter. |
| Dirt, water, or stale fuel is in the fuel system. | Contact an Authorized Service Dealer. |

# The engine overheats.

| Possible Cause | Corrective Action |
|---|---|
| The engine load is excessive. | Reduce the ground speed. |
| The oil level in the crankcase is low. | Add oil to the crankcase. |
| The cooling fins and air passages under the engine blower housing are plugged. | Remove the obstruction from the cooling fins and air passages. |

# The machine does not drive.

| Possible Cause | Corrective Action |
|---|---|
| The hydraulic-fluid in the transmission is low. | Add hydraulic fluid to the hydraulic fluid expansion tank in the tower. |
| Air is in the hydraulic system. | Bleed the air out the hydraulic system. |
| A drive belt slipped. | Replace the pump-drive belt. |
| A drive belt idler spring is missing. | Replace the pump-drive belt idler spring. |
| The bypass valves are in the tow position. | Turn the bypass valves to the drive position. |

# California Proposition 65 Warning Information

## What is this warning?

You may see a product for sale that has a warning label like the following:



**WARNING:** Cancer and Reproductive Harm—www.p65Warnings.ca.gov.

## What is Prop 65?

Prop 65 applies to any company operating in California, selling products in California, or manufacturing products that may be sold in or brought into California. It mandates that the Governor of California maintain and publish a list of chemicals known to cause cancer, birth defects, and/or other reproductive harm. The list, which is updated annually, includes hundreds of chemicals found in many everyday items. The purpose of Prop 65 is to inform the public about exposure to these chemicals.

Prop 65 does not ban the sale of products containing these chemicals but instead requires warnings on any product, product packaging, or literature with the product. Moreover, a Prop 65 warning does not mean that a product is in violation of any product safety standards or requirements. In fact, the California government has clarified that a Prop 65 warning “is not the same as a regulatory decision that a product is ‘safe’ or ‘unsafe.’” Many of these chemicals have been used in everyday products for years without documented harm. For more information, go to https://oag.ca.gov/prop65/faqs-view-all.

A Prop 65 warning means that a company has either (1) evaluated the exposure and has concluded that it exceeds the “no significant risk level”; or (2) has chosen to provide a warning based on its understanding about the presence of a listed chemical without attempting to evaluate the exposure.

## Does this law apply everywhere?

Prop 65 warnings are required under California law only. These warnings are seen throughout California in a wide range of settings, including but not limited to restaurants, grocery stores, hotels, schools, and hospitals, and on a wide variety of products. Additionally, some online and mail order retailers provide Prop 65 warnings on their websites or in catalogs.

## How do the California warnings compare to federal limits?

Prop 65 standards are often more stringent than federal and international standards. There are various substances that require a Prop 65 warning at levels that are far lower than federal action limits. For example, the Prop 65 standard for warnings for lead is 0.5 µg/day, which is well below the federal and international standards.

## Why don’t all similar products carry the warning?

- Products sold in California require Prop 65 labelling while similar products sold elsewhere do not.
- A company involved in a Prop 65 lawsuit reaching a settlement may be required to use Prop 65 warnings for its products, but other companies making similar products may have no such requirement.
- The enforcement of Prop 65 is inconsistent.
- Companies may elect not to provide warnings because they conclude that they are not required to do so under Prop 65; a lack of warnings for a product does not mean that the product is free of listed chemicals at similar levels.

## Why does Toro include this warning?

Toro has chosen to provide consumers with as much information as possible so that they can make informed decisions about the products they buy and use. Toro provides warnings in certain cases based on its knowledge of the presence of one or more listed chemicals without evaluating the level of exposure, as not all the listed chemicals provide exposure limit requirements. While the exposure from Toro products may be negligible or well within the “no significant risk” range, out of an abundance of caution, Toro has elected to provide the Prop 65 warnings. Moreover, if Toro does not provide these warnings, it could be sued by the State of California or by private parties seeking to enforce Prop 65 and subject to substantial penalties.

# Notes:

# Notes:


TORO®