Xiaolei

Matter Smart 4-Button Scene Switch

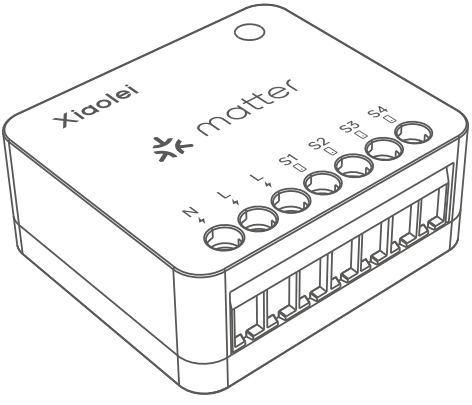

MK6

Product Introduction

- **[Works with Major Matter Ecosystems]** MK6 is a Matter-certified smart scene switch that works seamlessly with Apple Home, Amazon Alexa, Google Home, SmartThings, and other Matter platforms. Manage devices from different brands in one app.
- **[Ultra-Compact Design]** Compact and versatile, MK6 fits easily into EU and US standard wall boxes. Ideal for both new installations and existing switch upgrades.
- **[Turn Conventional Switches into Smart Scene Switches]** MK6 turns momentary switches into smart scene switches. Use with a Matter hub and other smart devices to trigger a variety of smart scenes.
- **[Safety Certifications]** MK6 is FCC, CE, RED, RoHS, and ErP certified, ensuring reliable operation, electromagnetic compatibility, electrical safety, and environmental compliance.

Specifications

Model	MK6
Wireless Protocol	Matter over WiFi
Operating Voltage	100-240V~, 50/60Hz
Operating Temp.	-10℃~40℃
Control Commands	Short Press / Double Press / Long Press
Compatible Input Devices	Supports up to Four Momentary Switches
Dimensions	L45×W39.4×H18(mm)
Package Size	L49×W64×H25(mm)
Weight	20±5g

Dimensions

Unit: mm

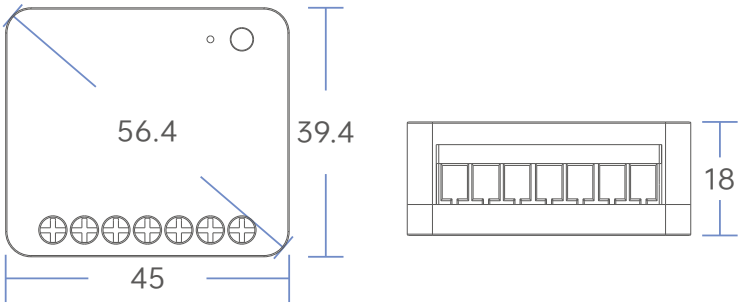

Product Overview

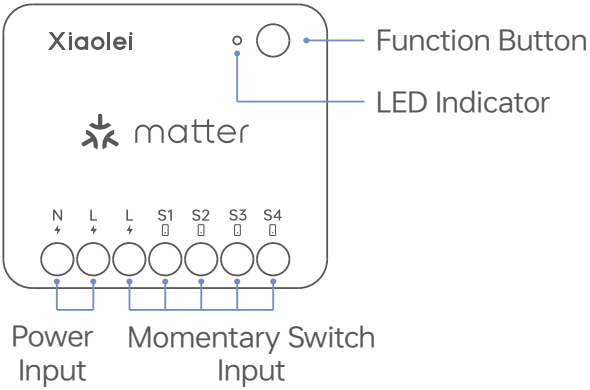

Button and LED Indicator Status		
Button Action	Indicator Status	Device Status
-	Solid Blue	Normal
	Fast Flashing Blue	Ready to Pair
	Slow Flashing Blue	Firmware Update in Progress
Press and Hold for 15s, Press 3 Times within 3s	Fast Flashing Red	Ready for Factory Reset
	Slow Flashing Red	Factory Reset in Progress

1 Matter App & Hub Setup

This device supports Matter and works with major smart home platforms. Download a compatible app and make sure your Matter hub is powered on and online before setup.

Apple Home

Google Home

Amazon Alexa

SmartThings

2 Wiring

- Disconnect the main power supply before wiring. Installation and maintenance must be performed by a qualified electrician. Never wire or touch the terminals while the device is powered.
- Follow the wiring diagram carefully. Wire size: 0.5–2.5mm² (24–14AWG). Strip length: 6–7mm.
- Do not connect the S1, S2, S3, or S4 terminals to neutral or ground. Doing so may damage the device or create a safety hazard.
- The device does not support rocker switch inputs or direct load connections.

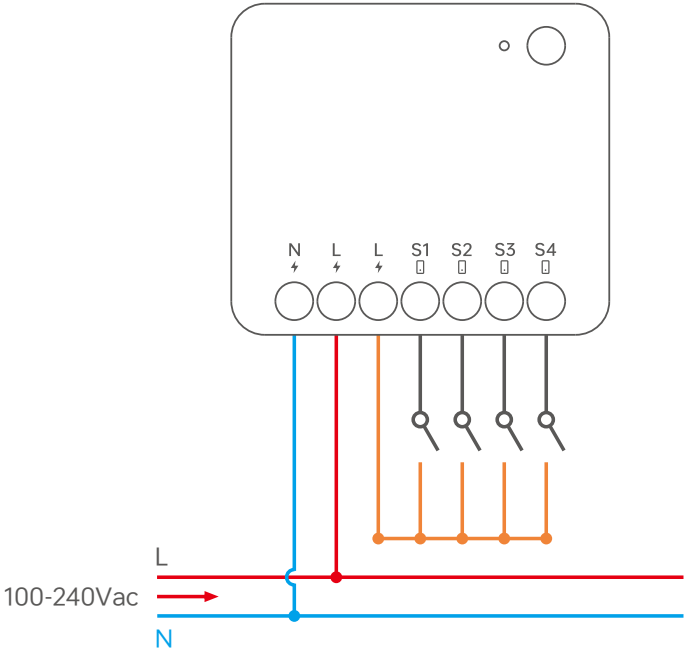
N
L
L
S1
S2
S3
S4
L
100-240Vac
N

3 Add to a Matter Platform

Open a Matter-compatible app, such as Apple Home or Google Home. Tap "Add Device," then scan the Matter QR code on the device and follow the on-screen instructions.

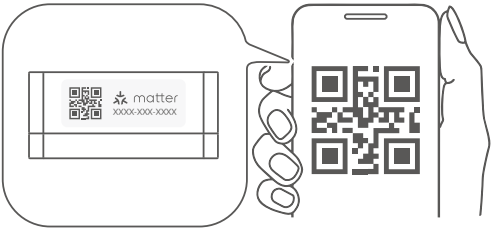

Digital Manual

4 Installation

For in-wall installation, use a wall box at least 50mm deep.

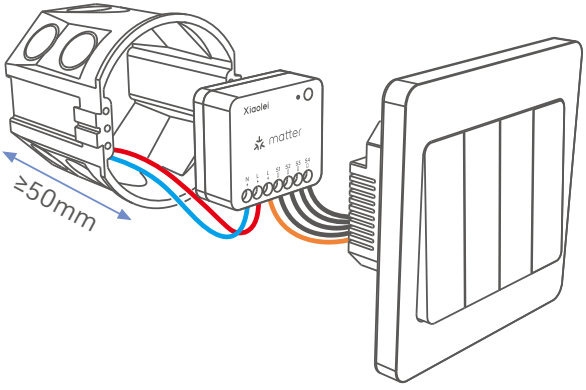

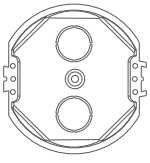

EU Wall Box

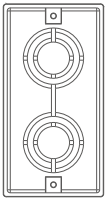

US Wall Box

Factory Reset

Press and hold the function button for 15 seconds. Release it when the indicator flashes red rapidly. Within 3 seconds, press the function button 3 times. The indicator will flash red slowly while the device resets.The reset is complete when the indicator flashes blue rapidly.

FAQ

This product is designed to comply with the Matter standard. As Matter is still evolving, some features, performance, and network stability may be limited by the current version.
Product performance is subject to the current Matter version. We will continue to update and optimize the product as Matter evolves.

Q1: Does this device support Matter?
A: Yes. It works with major smart home platforms including Apple Home, Google Home, Amazon Alexa, and SmartThings.

Q2: What switches and loads can be connected?
A: It supports up to a 4-gang momentary switch.
Rocker switches and loads are not supported.

Q3: Can it be used with multiple Matter platforms?
A: Yes. It can be used with multiple platforms as long as they support Matter.

Q4: What should I do if 5GHz WiFi is not supported during pairing?
A: This device supports 2.4GHz WiFi only, not 5GHz. If your router uses a combined 2.4GHz/5GHz network, disable this feature in the router settings, connect your phone to the 2.4GHz WiFi network, and try pairing again.

FCC Statement

1. This device complies with Part 15 of the FCC Rules. Operation is subject to the following two conditions:
(1)This device may not cause harmful interference.
(2)This device must accept any interference received, including interference that may cause undesired operation.
2. Changes or modifications not expressly approved by the party responsible for compliance could void the user's authority to operate the equipment.
Note: This equipment has been tested and found to comply with the limits for a class B digital device, pursuant to Part 15 of the FCC Rules. These limits are designed to provide reasonable protection against harmful interference in a residential installation. This equipment generates uses and can radiate radio frequency energy and, if not installed and used in accordance with the instructions, may cause harmful interference to radio communications. However, there is no guarantee that interference will not occur in a particular installation. If this equipment does cause harmful interference to radio or television reception, which can be determined by turning the equipment off and on, the user is encouraged to try to correct the interference by one or more of the following measures:

- Reorient or relocate the receiving antenna.
- Increase the separation between the equipment and receiver.
- Connect the equipment into an outlet on a circuit different from that to which the receiver is connected.
- Consult the dealer or an experienced radio/TV technician for help.

The device has been evaluated to meet general RF exposure requirement. This equipment should be installed and operated with a minimum distance of 20 cm between the radiator and your body.

Attention

- Product installation and commissioning should be done by a qualified professional.
- LTECH products are and not lightningproof non-waterproof (special models excepted). Please avoid the sun and rain. When installed outdoors, please ensure they are mounted in a water proof enclosure or in an area equipped with lightning protection devices .
- Good heat dissipation will prolong the working life of products. Please ensure good ventilation.
- Please check if the working voltage used complies with the parameter requirements of products.
- Use wires that meet electrical safety requirements and ensure all connections are secure. This module does not support direct connection to LED loads.
- Before you power on products, please make sure all the wiring is correct in case of incorrect connection that causes damage to light fixtures.
- If a fault occurs, please do not attempt to fix products by yourself. If you have any question, please contact us or an authorized dealer.

Warranty Agreement

- Warranty periods from the date of manufacture: 2 years
- Free repair or replacement services for quality problems are provided within warranty periods. Warranty exclusions below:

Warranty exclusions below:

Following conditions are not within the guarantee range of free repairing or replacement services:

- Beyond warranty periods.
- Any artificial damage caused by high voltage, overload, or improper operations.
- Products with severe physical damage.
- Damage caused by natural disasters and force majeure.
- Warranty labels and barcodes have been damaged.
- No any contract or invoice signed by LTECH .

1. Repair or replacement provided is the only remedy for customers. LTECH is not liable for any incidental or consequential damage unless it is within the law.
2. LTECH has the right to amend or adjust the terms of this warranty. The warranty that issues in writting shall prevail.

* Specifications and contents are subject to change without notice. If the actual product differs from this manual, the actual product shall prevail. For questions, please contact us or an authorized dealer.

Xiaolei

Manufacturer: Zhuhai LTECH Technology Co., Ltd.

Address: 1st Building,No. 183, Shui'an 1st Road, Xiangzhou District, 519060 Zhuhai City, PEOPLE'S REPUBLIC OF CHINA

Website: www.ltech-led.com

Email: lt@ltech-led.com

Made in China