YPOO

WALKING PAD TREADMILL USER MANUAL

Product Model: M4138L



Contents

01 Important Safety Instructions 04

02 Safety Notice 07

03 Product Introduction 09

04 Installation Steps 10

05 Function Menu 14

06 Remote Control Operation 15

07 Error Codes & Troubleshooting 16

08 APP User Manual 17

09 Care and Maintenance 19

10 Warranty 20

11 Workout Guide 22

Customer Service

Thank You for Your Purchase!

For any issues such as damaged or defective products, questions about replacement parts or any other service support, please contact our customer service department using the following methods:

support@ypoofitness.com

12-24 Hours

1-844-977-0007

To receive the quickest response, especially during peak business hours, emailing us with your Order ID and Description of Parts (Adding photos or videos would be helpful) is the best method.

Important:

Please do not return this product and Description of Parts without first contacting our customer service.

Download and use of YPOOFIT

1. To download the YPOOFIT app, scan the QR code or search "YPOOFIT" in the Apple App Store or Google Play Store.

YPOOFIT APP Download

APP Connection Guide

2. Open the YPOOFIT app. Log In or Sign Up.
3. Please note: If your phone is Apple - iPhone, please refer to the path: Profile > Settings>Language after login to switch the desired language.
4. Follow the in-app instructions to set up your device.

01. Important Safety Instructions

DANGER -To reduce the risk of electric shock

Always unplug this appliance from the electrical outlet immediately after using and before cleaning.

WARNING -To reduce the risk of burns, fire, electric shock, or injury to persons

- Never leave electrical appliances unattended after plugging them into an outlet. Unplug the appliance when not in use, and before installing or removing any parts.
- Do not use this device under blankets or pillows. Overheating may cause fire, electric shock, or personal injury.
- Children, patients, or persons with disabilities must be supervised by an adult at all times when using this device.
- Use the device strictly according to the instructions in this manual.
  Do not use accessories not recommended by the manufacturer.
- Do not use the device if the power cord or plug is damaged, if the device malfunctions, or if it has been dropped, damaged, or submerged in water. Contact the after-sales service department for assistance.
- Do not carry the device by the power cord, nor use the power cord as a handle.
- Keep the cord away from heated surfaces.

- Never use this device with the ventilation openings blocked. Keep the ventilation openings clear and free of lint, hair, and other debris.
- Do not drop or insert any objects into any openings.
- Do not use outdoors.
- Do not operate in areas where aerosol (spray) products are being used or where oxygen is being administered.
- CAUTION: To reduce the risk of injury from moving parts, unplug before servicing.
- WARNING: To reduce the risk of electric shock, unplug before cleaning or servicing.
- WARNING: Risk of personal injury. Keep children under the age of 13 away from this walking treadmill.
- To disconnect, turn all controls to the OFF position, then remove the plug from the outlet.
- This appliance is not intended for use by persons with reduced physical, sensory or mental capabilities or lack of experience and knowledge, unless they have been given supervision or instruction concerning use of the appliance by a person responsible for their safety.

SAVE THESE INSTRUCTIONS

GROUNDING INSTRUCTIONS:

- **This product must be grounded.** If it malfunctions or breaks down, grounding provides a path of least resistance for electric current, which reduces the risk of electric shock.

- The plug must be connected to a properly installed and grounded outlet that complies with all local electrical codes and ordinances.

⚠ DANGER

- Risk of Electric Shock: Improper connection of the equipment grounding conductor can result in a risk of electric shock. If you are unsure whether this product is properly grounded, consult a qualified electrician or service technician.

- Do not modify the plug provided with this product. If the plug does not fit your outlet, have a qualified electrician install a proper outlet.

02. Safety Notice



DO NOT
use during the 5-second auto-calibration cycle (after power-on).

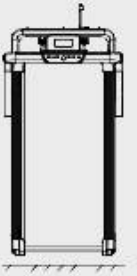

DO NOT
store upright.

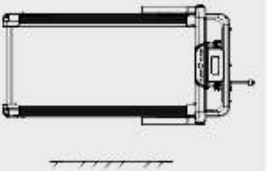

DO NOT
store sideways.

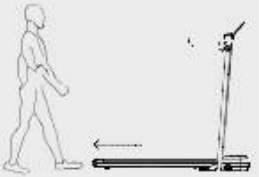

DO NOT
step on or off the walking treadmill while it is in operation.



DO NOT
use on uneven ground.

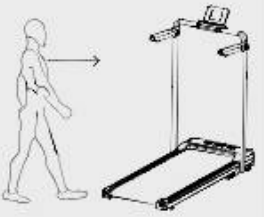

Please keep your gaze level to avoid dizziness.



Caution:
Extra care is required for elderly and pregnant users.



Please keep a rear clearance of at least 39 inches.



Children must be supervised at all times.

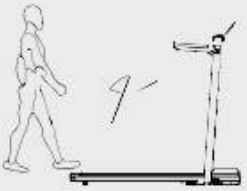

Please wear proper athletic footwear.

03. Product Introduction

Please inspect package contents on arrival.

If items are missing or damaged, please contact support@ypoofitness.com

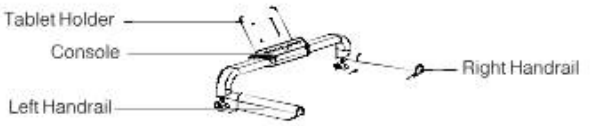



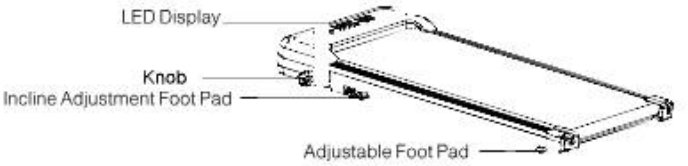

3.1 Accessories


Treadmill*1


Tablet Holder*1


Tool*1


Power Cord*1


Safety Key*1


Knob*2


User Manual*1

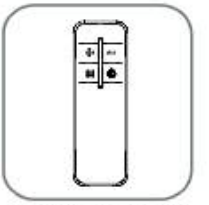
Remote Control*1

3.2 Specification

Model:	M4138L
Color:	Black
Speed:	0.5-5.0 MPH
Shock Absorption:	Air

04. Installation Steps

⚠ The main frame of the treadmill is pre-assembled at the factory. Please follow these instructions to complete the final assembly and secure all components.



01

Step 1: Unboxing and Placement

1. Two people are required to carefully remove the treadmill from its packaging and place it on a flat, stable surface.

2. Maintain a minimum clearance of 39 inches (100 cm) at the front and rear of the treadmill at all times, including before/after folding, during upright installation, and when handling the power cord.

02

Step 2: Upright Installation

Lift the uprights upward in the direction indicated by the arrows.

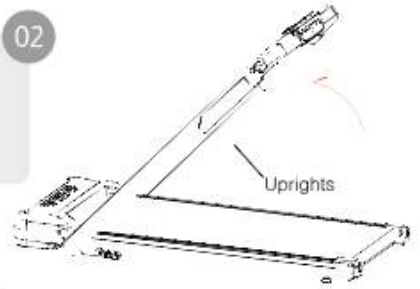

03

Step 3: Secure the Uprights

1. Fully raise the incline support post before rotating the knob to adjust the incline.
2. Align the mounting holes on the uprights with the holes in the main frame.
3. Hand-tighten one locking knob first to hold the uprights in position.
4. Install the locking knob on the opposite side.
5. Fully tighten both locking knobs on the left and right sides to ensure the uprights are securely locked.

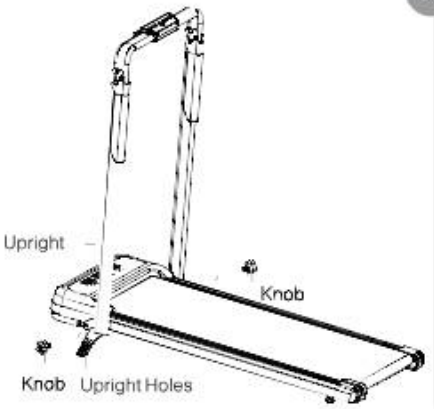

04

Step 4: Handrail Installation & Folding

1. Install Handrails. Lift the left and right handrails in the direction of the arrows until the bolt heads snap firmly into the handrail mounting holes (Figure A).

2. Fold Handrails. Press the bolt heads to release them from the mounting holes, then lower the handrails (Figure B).

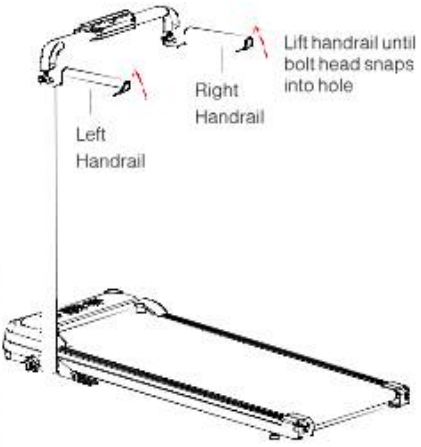

Figure A

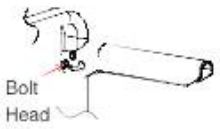

Inside bolt head must snap into handrail hole

Figure B

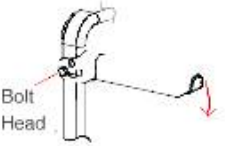

Press outside bolt head to fold handrail down

05

Step 5: Tablet Holder Installation

Insert the tablet holder into the console slot in the direction of the arrows, ensuring it is securely in place.

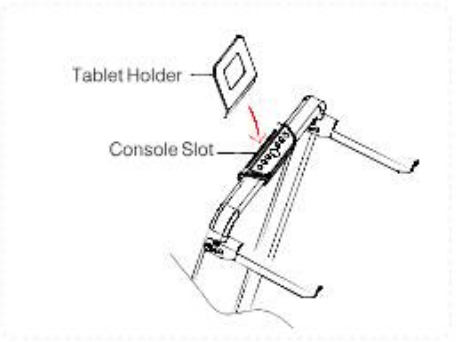





06

Step 6: Incline Adjustment

Manually shift the adjustable foot pads left or right to set the treadmill incline level.

Incline levels illustration:
Figure A = Level 1 (Lowest)
Figure B = Level 2 (Medium)
Figure C = Level 3 (Highest)

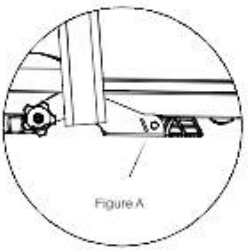

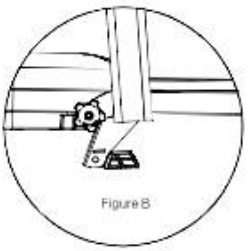

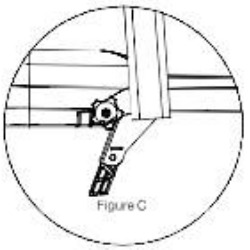

Manual Mode Operating Instructions

IMPORTANT SAFETY NOTE

For your safety, the treadmill must be connected to a properly grounded power outlet. Use a dedicated circuit do NOT share the outlet with other electrical appliances.
While this product is designed and manufactured with safety in mind, please follow all instructions carefully to ensure safe operation.

1.Place the treadmill on a level, open area.

2.Connect the power cord and turn on the power switch. The power indicator will illuminate, and the buzzer will beep once.

3.Check the display to ensure all data appears normal. Before pressing the Start button, make sure the support post knobs are securely tightened.

4.Insert the safety key into the designated slot on the console and clip the safety clip to your clothing. The treadmill will enter manual standby mode.

5.Press the Start button. The display will show "3-2-1," with the buzzer sounding once for each countdown. The motor will start automatically once the countdown completes.

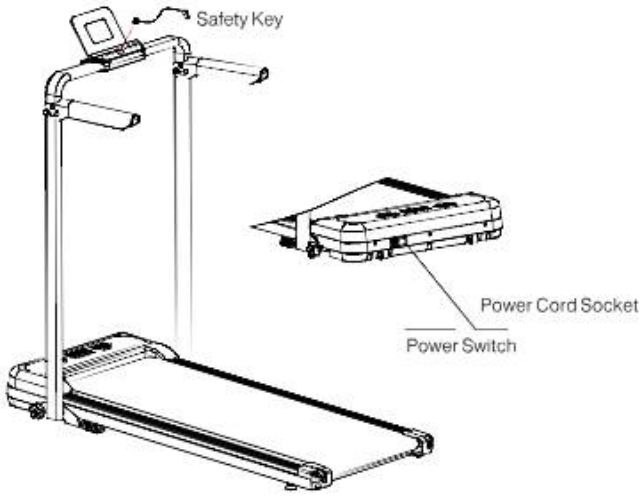

05. Function Menu



2.2 / 12:38 / 226 / 16.3

SPEED	TIME	KCAL	DIST
Display Speed 0.5-5.0MPH	Display Time 0-99.59	Display Calories 0-999	Display Distance 0-99.9 Mile

Setting Parameter	Initial Value	Display range
Speed (MPH)	0.5	0.5-5.0
Time(Minutes: Seconds)	0.00	0-99.59
Calories (Kcal)	0.00	0-999
Distance (Mile)	0.00	0.00-99.9

Tips: The workout datas (Speed, Time, Distance, Calorie) will be alternated display per 5 seconds.



Console Button Functions

- START / PAUSE / STOP: Press to start, pause, or stop the treadmill.
- SPEED +/-: Press to increase or decrease the treadmill speed.
- MODE: Press to select one of three countdown workout modes: Time Countdown, Distance Countdown, or Calorie Countdown。

06. Remote Control Operation

6.1 Remote Control Instructions

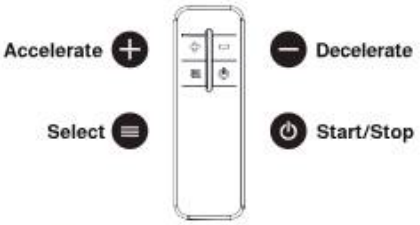

A.Manual Mode Function

In manual mode, press the "⏻" button to begin. The treadmill will start at 0.5MPH ,and the time, distance, and calorie counters will start from 0. Press the "+"or "- " buttons to adjust the speed. After 100 minutes, the treadmill will auto-matically stop.

B.Countdown Mode Function

Press"☰" and you can use the speed "+"or "-"to set the parameter value(the initial running speed is 0.5 MPH) .

After setting, press the " ⏻ " button to run which will automatically stop when it reaches the set value.

- Time Countdown Mode: The window shows 10:00 minutes, set the time (5:00 to 60:00 minutes)with the speed keys.
- Distance Countdown Mode:The window shows 1.0 mile, set the distance (1.0 to 99.0 miles) with the speed keys.
- Calorie Countdown Mode: The window shows 50 kcal, set the target (20 to 990 kcal) with the speed keys.

6.2 Remote Control Pairing Steps

1. After the treadmillis powered off for 10 seconds;
2. Press and hold the "+" button on the remote control;
3. Simultaneously turn on the treadmill power;
4. Pairing is completed after hearing the beep sound.

6.3 Battery

2pcs AAA battery - 1.5V

07. Error Codes& Troubleshooting

Communication Error	Problem Description	Initial Actions & Support	
E02/E11	Motor Open Circuit / Wiring Fault	Power off, open motor cover, check and secure all internal connections, especially the motor wires.	If wires are damaged or the issue persists, please contact us.
E03	Motor Over-current	/	Please contact our customer support directly for further assistance.
E04/E05	Over-voltage / Under-voltage	1. Ensure the treadmill is plugged into a stable and reliable wall outlet directly. Avoid using extension cords or power strips. 2. Power off and unplug for 2 minutes, then restart.	Issue unresolved? Please contact us.
E06/E08	Lower Control Board Overheat Protection	1. Power off, check for any foreign objects stuck under the running belt or around the rollers, and perform basic lubrication simultaneously.	If the error reappears, please contact us.
E07	Safety Key Fault	1. Correctly place the safety key on the machine's yellow dot marker. 2. Check the column cable under the right handrail knob for any visible damage.	Screen unresponsive after placement? Please contact us.
E13	Communication Error	1. Power off, open motor cover, check and secure all internal connections. 2. Also check the column cable under the right handrail knob for any visible damage.	If wires are damaged or issue persists, please contact us.

Important Safety Notice:

Power off and unplug the device before performing any checks. Do not disassemble core components or perform risky operations.
Our support team will provide you with professional solutions.

08. APP User Manual

Scan The QR Code
Download YPOO FIT APP

Connect the Device

Ensure Bluetooth is enabled on your mobile phone or tablet.

- 1. Download and install the YPOOFIT app on your device. You can search for "YPOOFIT" in the App Store/Google Play, or scan the QR code below to download and install it.
- 2. Open the YPOOFIT app and follow the on-screen prompts to log in or create an account.
- 3.Open the app and tap the Bluetooth icon on the homepage. The app will automatically search for your treadmill.
- 4. Important: Please allow the app to handle the connection. Do not connect manually to any treadmill-related device via your phone's system settings.

  If the app cannot find your treadmill: Please try resetting the treadmill by turning it off and on again, then repeat the steps above.

  If you continue to experience issues, please contact us for further assistance.

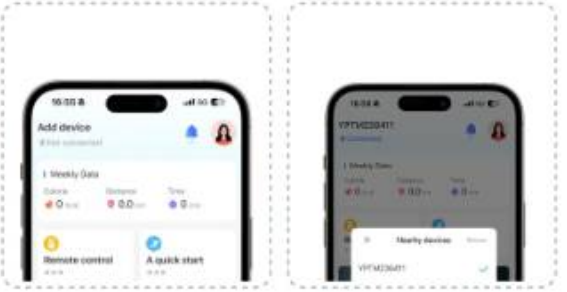

Multi-Course Library

Access a wide variety of workout courses in the app, so you can choose the programs that best align with your fitness goals.



Personalized Training Plans

Set workout plans in the app, and the treadmill automatically adjust speed and time for a smooth, rhythmic workout.



Simulated Outdoor Workouts

Experience immersive, real-world walking scenarios with vivid outdoor scenery, bringing the feeling of outdoor exercise into your home.



09. Care And Maintenance

A. Symptom : Walking Belt is Off-Center or Slipping.



Figure 1

Walking Belt is Off-Center or Slipping:

1. Check Direction: Run the treadmill empty at low speed (2MPH). Observe which direction the belt drifts (left or right).
2. Power off appliance and unplug the power cord
3. Manual Centering:
   - If the belt drifts left, use the provided hex tool to turn the left idler roller screw clockwise ¼ of a turn (refer to Figure 1).
   - If the belt drifts right, use the provided hex tool to turn the right idler roller screw counter-clockwise ¼ of a turn (refer to Figure 2).
4. Appliance MUST work 1-2mintutes. Repeat manual centering process untill the walk belt is centered.



Figure 2

Walking Belt Slipping Correction:

1. Power off appliance before operation.
2. Using the hex tool, turn both idler roller screws clockwise 1/2 of turn(refer to figure 3)
3. After corrected, please plug in the treadmill and walk on it at under 1 MPH for 1–2 minutes to check for slipping. Repeat the tightening process until the belt stays securely in place.



Figure 3

Attentions

1. Remove any debris around the treadmill before maintenance to prevent injury.
2. Always use the hex tool provided with the treadmill.
3. Be careful during maintenance and avoid pinching your fingers.

B: Appliance cleaning.



- Power Off & Unplug: Turn off the treadmill and unplug the power cord before cleaning.
- Wipe Down: Use a soft, damp cloth to wipe the treadmill frame and console. Do not use acidic or caustic detergents, as they can damage the surface.
- Cleaning Note: Do not clean the underside of the walking belt.
- Normal Observation: A small amount of black residual powder under the treadmill during operation is normal and comes from belt friction.

10. Warranty

MANUFACTURER'S LIMITED WARRANTY

We warrant to the original purchaser that this product is free from defects in material and workmanship when used for its intended purpose, under the conditions that it has been installed and operated in accordance with the owner's manual.

LENGTH OF WARRANTY

1. Warranty Coverage
We offer a comprehensive **One-Year Limited Warranty** from the date of purchase.

2. Customer Support
Access **24/7 Online Customer Service** for immediate assistance.

Service Details During Warranty Period:

- We provide detailed troubleshooting and technical support or other remedies that do not require you to return the product.
- Should a defect arise from materials or workmanship, we will supply replacement parts free of charge.

EXCLUSIONS FROM WARRANTY COVERAGE

YPOO does not warrant against, and shall not be responsible for, any product failure, malfunction, or damage attributable to the following:

1. Improper installation and/or failure to follow the installation instructions.
2. Use of the product beyond normal home use, or use in an application for which it was not designed.
3. Cosmetic damage, including but not limited to scratches, scuffs, or discoloration.
4. Damage caused by normal wear and tear, vandalism, accidents, or acts of nature.
5. Acts of nature or environmental conditions, including but not limited to fire, flooding, snow, ice, hurricanes, earthquakes, lightning, corrosion, mold, mildew, or staining from foreign substances such as dirt, grease, or oil.
6. Normal weathering due to exposure to sunlight, weather, or atmospheric conditions, which may cause surfaces to fade, chalk, accumulate dirt, or stain.
7. Improper operation, alteration, handling, storage, abuse, or neglect of the product.

WARRANTY SERVICE STATEMENT

Under normal home use conditions, YPOO, at its sole discretion, will repair or replace, free of charge, any part(s) proven to be defective.

Any repair or replacement does not extend or renew the original warranty period; coverage will apply only to the remaining portion of the original product warranty.

This warranty is valid only for the original purchaser and is non-transferable. Proof of original purchase is required to process all warranty claims.

INFORMATION REQUIRED FOR REPLACEMENT PARTS

When requesting replacement parts, please have the following information available:

1. Order ID;
2. Description of the part(s) (photos or videos are helpful);
3. Part number;
4. Date of purchase;

11. Workout Guide

This routine helps improve flexibility and reduce muscle tension. Remember to perform each stretch gently and avoid bouncing or pushing too hard.



1. Stretch Down:

Slightly bend your knees and slowly bend your body downward.Relax your back and shoulders, and try to extend your hands toward your toes.Hold for 10–15 seconds, then rest for a few seconds. Repeat 3 times.



2. Hamstring Stretch:

Sit on a clean mat. Straighten one leg, and bend the other leg inward so that the sole of the foot rests against the inner thigh of the straightened leg.

With the hand on the same side, reach toward the toes of the straightened leg.

Hold for 10–15 seconds, then rest for a few seconds. Switch legs and repeat.



3. Calf & Achilles Stretch:

Stand facing a wall with both hands placed against it.

Step one foot forward and keep the back leg straight, with both heels flat on the floor, while leaning toward the wall.

Hold for 10–15 seconds, then rest for a few seconds.

Repeat 3 times for each leg.



4. Quadriceps Stretch:

Hold your body steady by placing one hand against a wall.

With the other hand, reach back to grasp the ankle of the same leg and gently pull it toward your hip until you feel a stretch in the front of your thigh.

Hold for 10–15 seconds, then rest for a few seconds. Switch legs and repeat.



5. Inner thigh stretch:

Sit on the floor with the soles of your feet pressed together and your knees gently lowered toward the floor.

Hold for 10–15 seconds, then rest for a few seconds.

Repeat 3 times.

Sport makes me different

IMPORTANT: Read all instructions carefully before using this product. Retain this owner's manual for future reference. The specifications of this product may vary from this photo, subject to change without notice.

Email: support@ypoofitness.com
Hot line: 1-844-977-0007

support@ypoofitness.com