NordicTrack® RW900

nordictrack.com

Model No. NTRW19423.1
Serial No. _____

Write the serial number in the space above for reference.

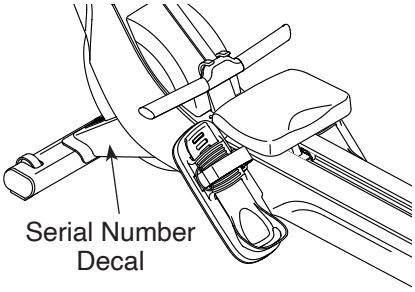

REGISTER YOUR PRODUCT

To register your product and activate your warranty today, go to my.nordictrack.com.

MEMBER CARE

For service at any time, go to my.iFIT.com or scan the QR code.

Please do not contact the store.

⚠ CAUTION

Read all precautions and instructions in this manual before using this equipment. Keep this manual for future reference.

USER'S MANUAL

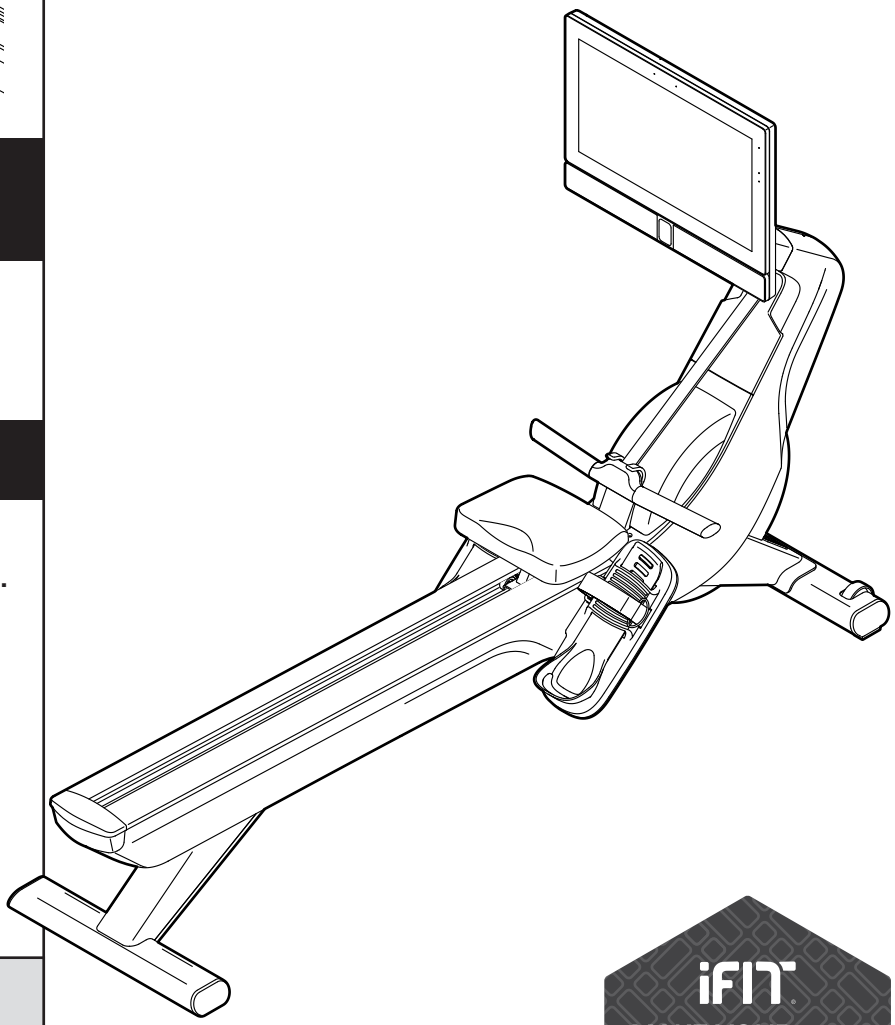



TABLE OF CONTENTS

WARNING DECAL PLACEMENT 2
IMPORTANT PRECAUTIONS 3
BEFORE YOU BEGIN 5
PART IDENTIFICATION CHART 6
ASSEMBLY 7
HOW TO USE THE ROWER 13
HOW TO USE THE CONSOLE 15
FCC INFORMATION 26
MAINTENANCE AND TROUBLESHOOTING 27
EXERCISE GUIDELINES 30
PART LIST 32
EXPLODED DRAWING 34
ORDERING REPLACEMENT PARTS . . . . . Back Cover
LIMITED WARRANTY . . . . . Back Cover

WARNING DECAL PLACEMENT

This drawing shows the location(s) of the warning decal(s). **If a decal is missing or illegible, see the front cover of this manual and request a free replacement decal. Apply the decal in the location shown.** Note: The decal(s) may not be shown at actual size.

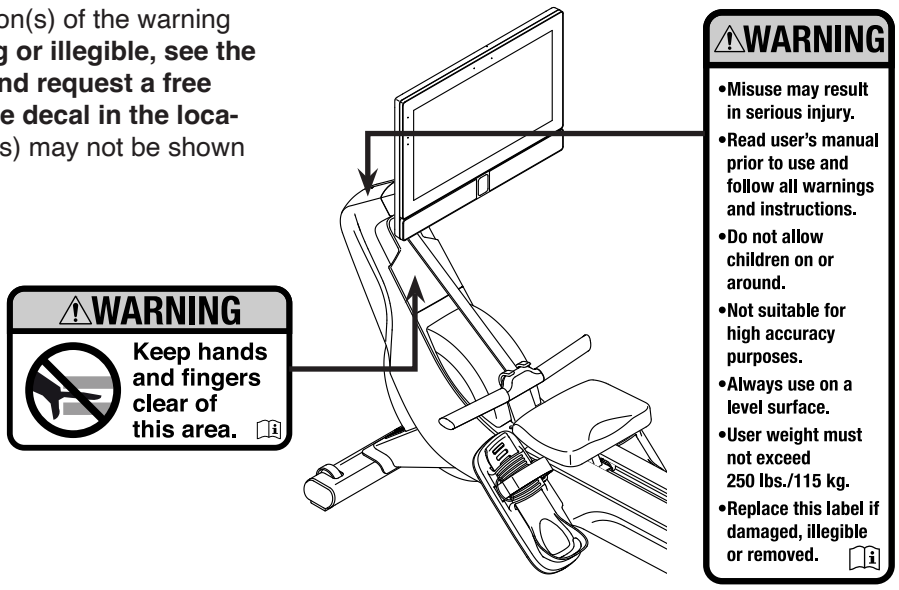

NORDICTRACK and IFIT are registered trademarks of iFIT Inc. The Bluetooth® word mark and logos are registered trademarks of Bluetooth SIG, Inc. and are used under license. Google Maps is a trademark of Google LLC. Wi-Fi is a registered trademark of Wi-Fi Alliance. WPA and WPA2 are trademarks of Wi-Fi Alliance.

IMPORTANT PRECAUTIONS

⚠ WARNING: To reduce the risk of serious injury, read all important precautions and instructions in this manual and all warnings on the rower before using the rower. iFIT assumes no responsibility for personal injury or property damage sustained by or through the use of this product.

1. **It is the responsibility of the owner to ensure that all users of the rower are adequately informed of all precautions.**
2. **Keep children under age 16 and pets away from the rower at all times.**
3. **Consult your health care provider before beginning any exercise program. This is especially important for persons over age 35 or persons with pre-existing health problems.**
4. **Consult your health care provider before beginning or continuing any exercise program during pregnancy. Use the rower only as authorized by your health care provider.**
5. **The rower is not intended for use by persons with reduced physical, sensory, or mental capabilities or lack of experience and knowledge, unless they are given supervision or instruction about the use of the rower by someone responsible for their safety.**
6. **Use the rower only as described in this manual.**
7. **The rower is intended for home use only. Do not use the rower in a commercial, rental, or institutional setting.**
8. **Keep the rower indoors, away from moisture and dust. Do not put the rower in a garage or covered patio or near water.**
9. **Place the rower on a level surface, with a mat beneath it to protect the floor or carpet. Make sure that there is at least 2 ft. (0.6 m) of clearance around the rower.**
10. **Inspect and properly tighten all parts each time the rower is used. Replace any worn parts immediately. Use only manufacturer-supplied parts.**
11. **The rower should not be used by persons weighing more than 250 lbs. (115 kg).**
12. **Wear appropriate clothes while exercising; do not wear loose clothes that could become caught on the rower. Always wear athletic shoes for foot protection.**
13. **Always keep your back straight while using the rower; do not arch your back.**
14. **Do not release the row bar while the strap is extended.**
15. **Over exercising may result in serious injury or death. If you feel faint, if you become short of breath, or if you experience pain while exercising, stop immediately and cool down.**

PROTECT

YOUR FITNESS EQUIPMENT WITH AN EXTENDED SERVICE PLAN



Your new fitness equipment is not an ordinary purchase; it is an investment in your health and well being for years to come.

As the leading provider of manufacturer's extended service plans, ICON strives to protect your equipment and your future.

Please review the following service plans and find one that best fits your needs.

PREVENTIVE MAINTENANCE SERVICE PLANS

Equipment Price	3-Year Plan	5-Year Plan
$0.00 to $1000.00	$199.99	$289.99
$1001.00 to $1500.00	$259.99	$379.99
$1501.00 to $2500.00	$339.99	$489.99
(Bikes/Systems Only) $0.00 to $2500.00	$139.99	NA

Features:

- Includes an annual preventive maintenance and performance check at your convenience
- Unlimited in-home repairs; no shipping required
- Covers parts and labor on all manufacturer's defects, as well as wear and tear on parts
- Up to 5 years of coverage available

STANDARD SERVICE PLANS

Equipment Price	1-Year Plan	2-Year Plan	3-Year Plan
$0.00 to $300.00	$29.99	$39.99	$59.99
$301.00 to $1000.00	$89.99	$119.99	$149.99
$1001.00 to $2000.00	$109.99	$139.99	$179.99
$2001.00 to $3000.00	$179.99	$209.99	$239.99

Features:

- Unlimited in-home repairs; no shipping required
- Covers parts and labor on all manufacturer's defects, as well as wear and tear on parts
- Up to 3 years of coverage available

To protect your fitness equipment today, please call Customer Care at 1-800-677-3838.
Or, visit us online at www.utserv.com.

UTS
UNIVERSAL TECHNICAL SERVICES

BEFORE YOU BEGIN

Thank you for selecting the new NORDICTRACK® RW 900 rower. Rowing is an effective exercise for increasing cardiovascular fitness, building endurance, and toning the body. The RW 900 rower is designed to let you enjoy this effective exercise in the convenience and privacy of your home.

For your benefit, read this manual carefully before you use the rower. If you have questions after reading this manual, please see the front cover of this manual. To help us assist you, note the product model number and serial number before contacting us. The model number and the location of the serial number decal are shown on the front cover of this manual.

Before reading further, please review the drawing below and familiarize yourself with the labeled parts.

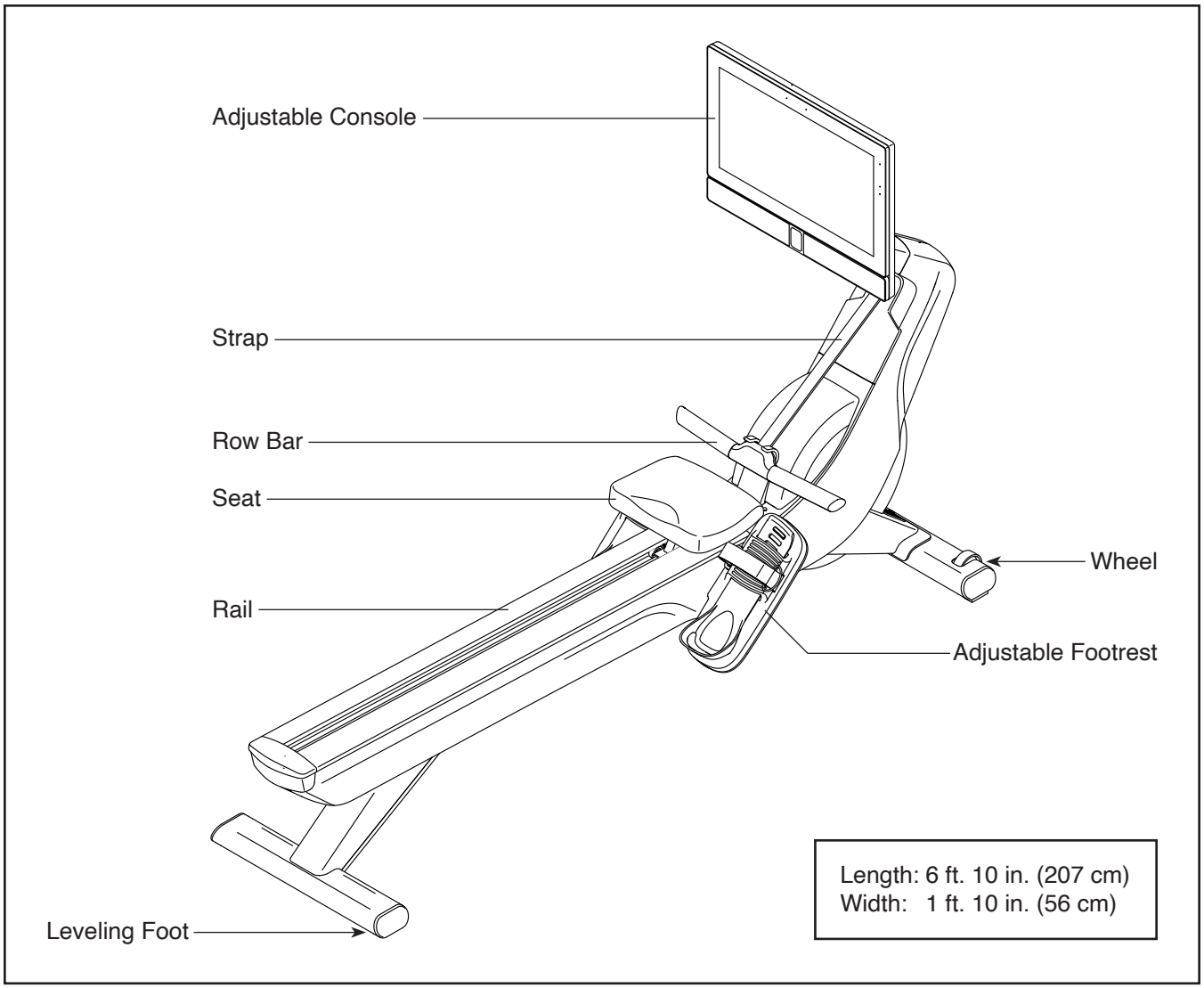

PART IDENTIFICATION CHART

Use the drawings below to identify the small parts needed for assembly. The number in parentheses below each drawing is the key number of the part, from the PART LIST near the end of this manual. The number following the key number is the quantity needed for assembly. **Note: If a part is not in the hardware kit, check to see whether it has been preassembled. Extra parts may be included.**

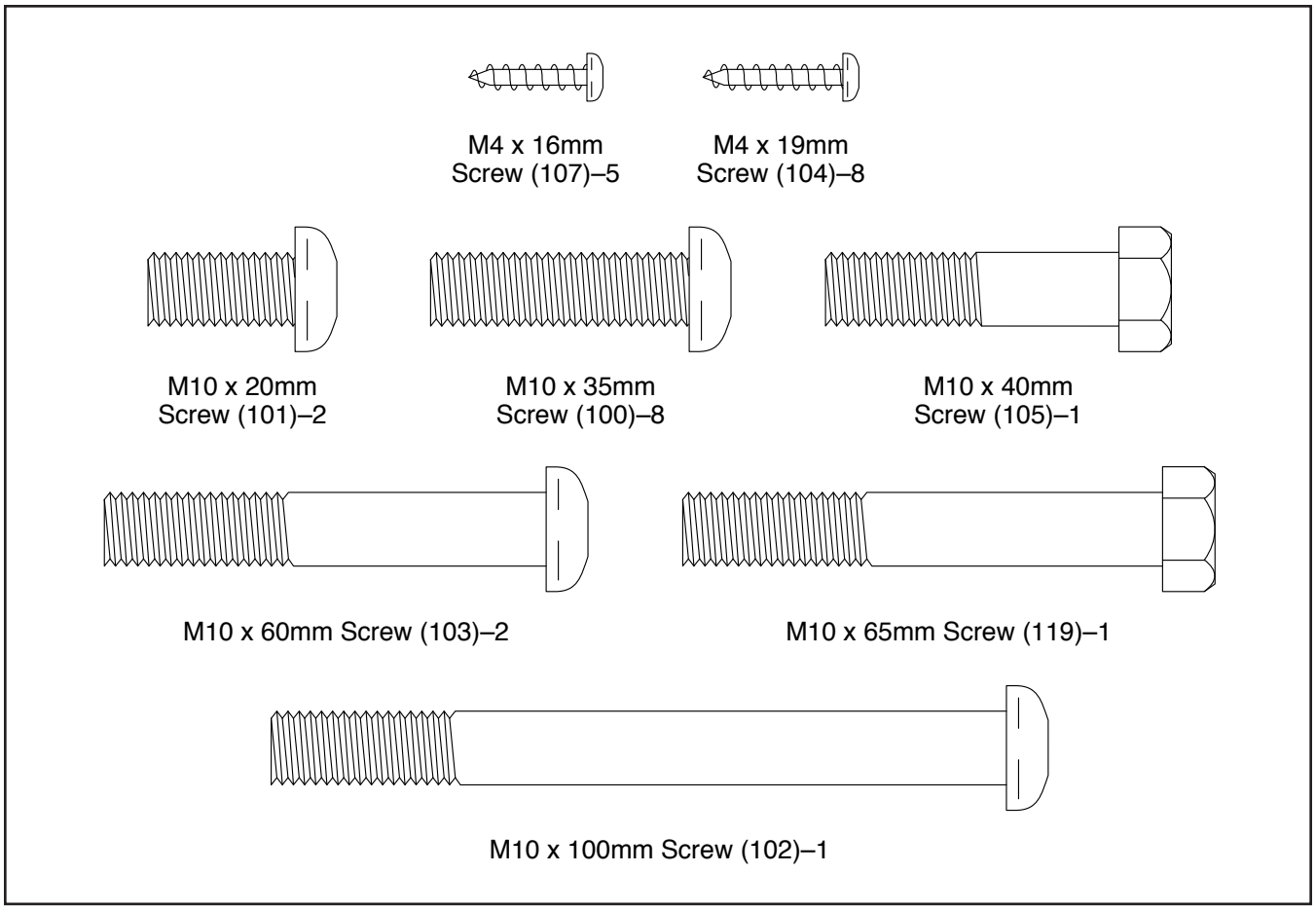

ASSEMBLY

Easy step-by-step interactive 3D assembly instructions for this product can be found on BILT®

Download the **FREE** App

Scan here and search by your model number

Download on the App Store

GET IT ON Google Play

1. **To use the assembly steps in this manual, first see the helpful tips below.**

- Assembly requires two persons.
- Place all parts in a cleared area and remove the packing materials. Do not dispose of the packing materials until you finish all assembly steps.
- To identify small parts, see page 6.
- In addition to the included tool(s), assembly requires the following tool(s):

  one Phillips screwdriver 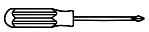

  one adjustable wrench 

  Assembly may be easier if you have a set of wrenches. To avoid damaging parts, do not use power tools.

2. **Take any necessary measures to protect your floor before you begin. Place a soft cloth or a piece of cardboard on the floor where you will assemble the rower.**

   Make sure that the Row Bar (19) is securely inserted into the Row Bar Hook (88).

   With the help of a second person, tip the Frame (1) upside down so that the shipping bracket (A) is resting on your floor. **Have the second person hold the Frame steady until step 5 is completed.**

   Orient the Front Stabilizer (4) as indicated by the sticker, and attach it to the Frame (1) with two M10 x 20mm Screws (101); **firmly tighten the Screws.**

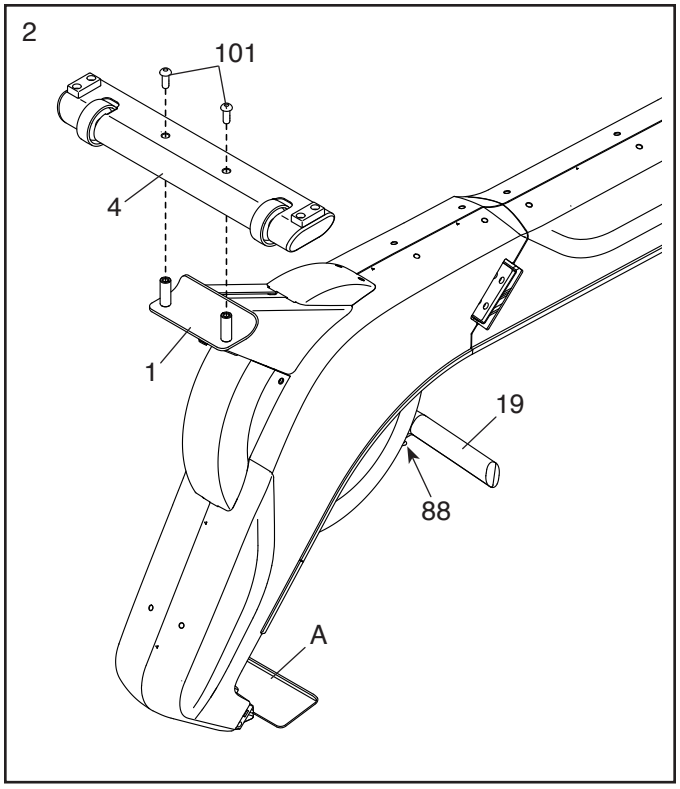

3. Identify the Right Footrest (29) and the Right Footrest Bottom (31).

   Attach the Right Footrest Bracket (27) to the right side of the Frame (1) with four M10 x 35mm Screws (100); **start all four Screws, and then tighten them.**

   Then, attach the Right Footrest Bottom (31) to the Right Footrest Bracket (27) with two M4 x 19mm Screws (104).

   Repeat this step on the other side of the rower.

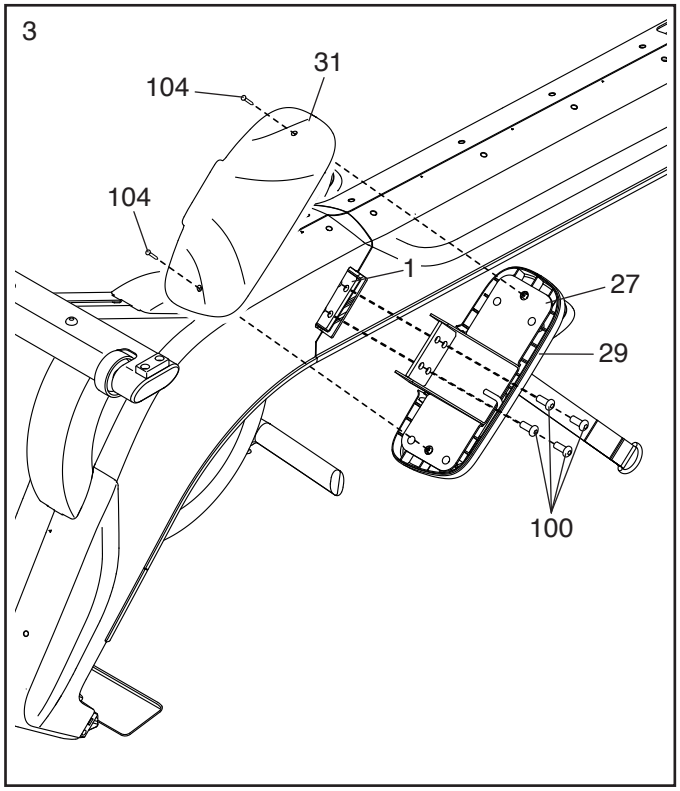

4. Hold the Rear Stabilizer (5) in the bracket on the Frame (1), and attach it with an M10 x 100mm Screw (102); **do not fully tighten the Screw yet.**

   Finish attaching the Rear Stabilizer (5) with two M10 x 60mm Screws (103).

   Then, fully tighten the M10 x 100mm Screw (102).

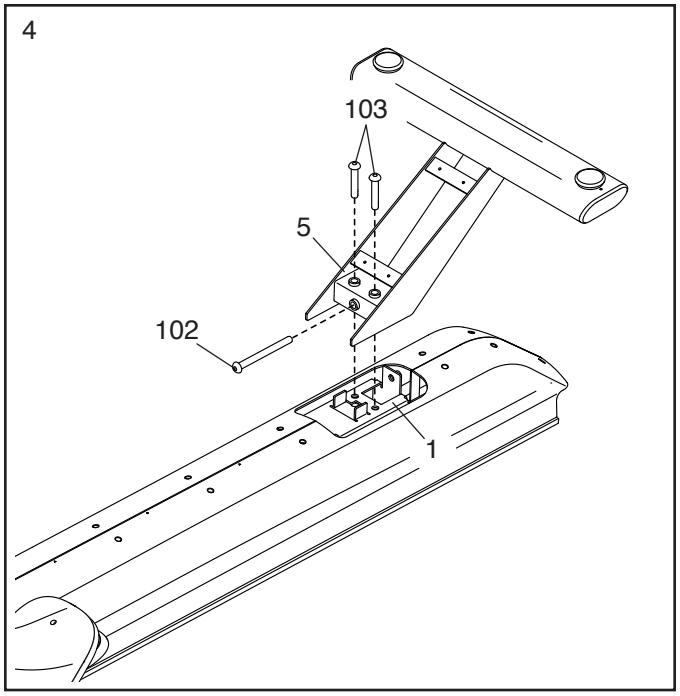

5. **Avoid damaging the tabs on the Stabilizer Cover (91).**

   Orient the Stabilizer Cover (91) as shown, press it onto the Rear Stabilizer (5), and attach it with four M4 x 19mm Screws (104); **start all four Screws, and then tighten them.**

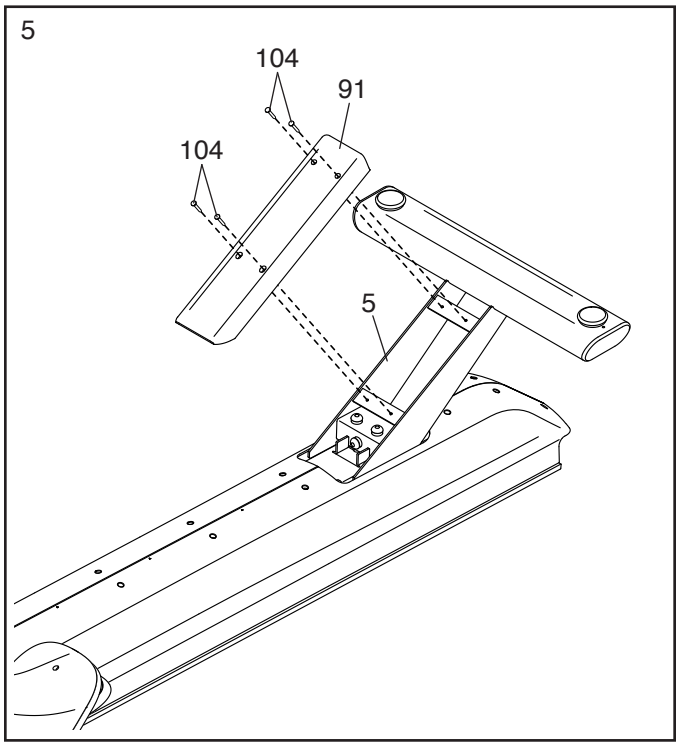

6. With the help of a second person, tip the rower to the upright position.

   Remove and discard the wire tie (not shown) attaching the Main Wire (92) to the shipping bracket (A). Then, remove and discard the two shipping screws (B) and the shipping bracket (A).

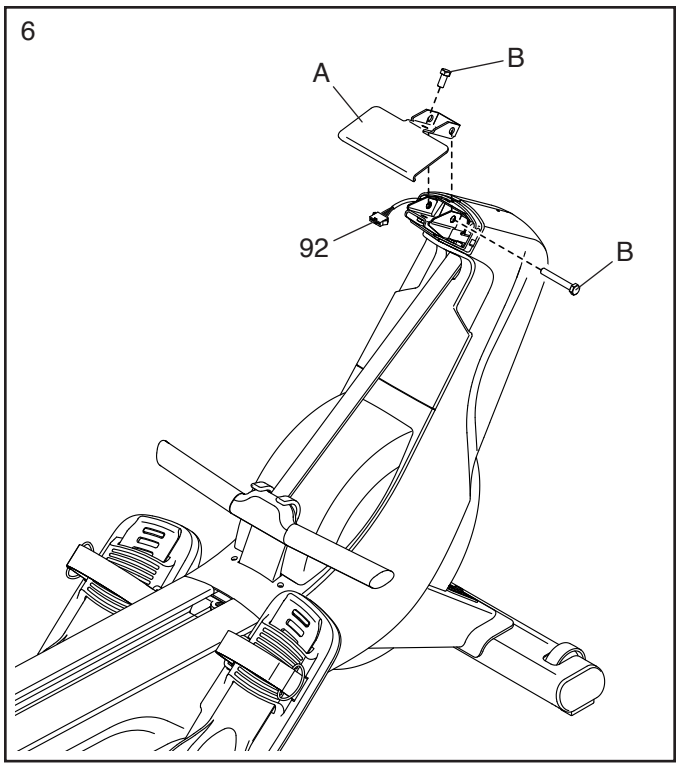

7. **Avoid pinching the wires.** Have a second person hold the Console (6) and insert the attached Neck (8) into the bracket on the Frame (1). Attach the Neck with an M10 x 40mm Screw (105); **do not fully tighten the Screw yet.**

   Finish attaching the Neck (8) with an M10 x 65mm Screw (119). **Then, fully tighten the M10 x 40mm Screw (105).**

   Then, connect the Neck Wire (93) to the Main Wire (92). **IMPORTANT: The wire connectors should slide together easily and snap into place with an audible click. If they do not, turn one connector and try again. You must connect the wires correctly for the rower to function correctly.**

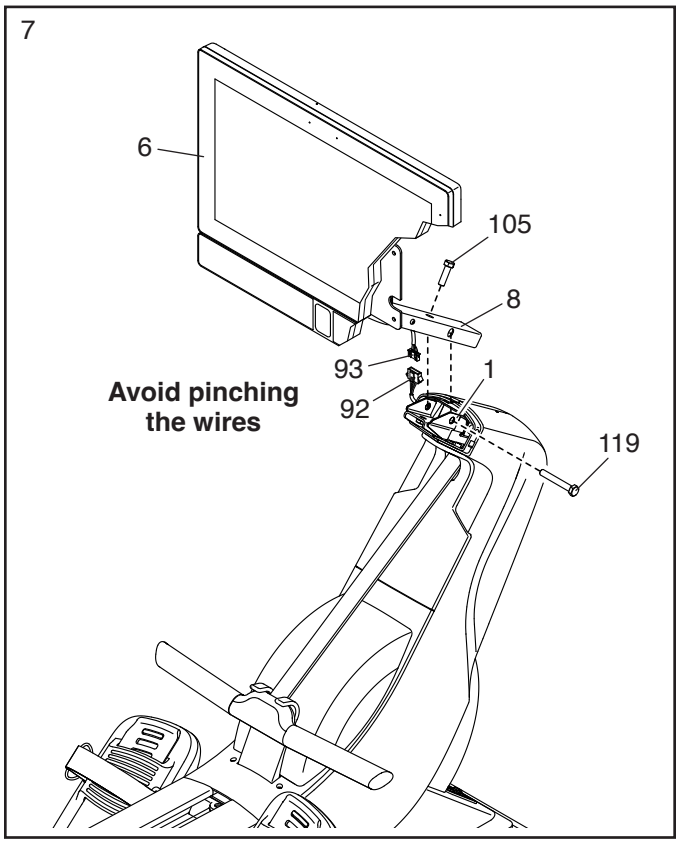

8. **Note: For clarity, the console is not shown in this step.**

   Orient the Right and Left Neck Shields (77, 78) as shown. Position the Wires (92, 93) inside of the Left Neck Shield as you press the Neck Shields together around the Neck (8).

   Avoid pinching the wires. Press the Neck Shields (77, 78) onto the Right and Left Shields (75, 76).

   Then, attach the Neck Shields (77, 78) to the Neck (8) with two M4 x 16mm Screws (107).

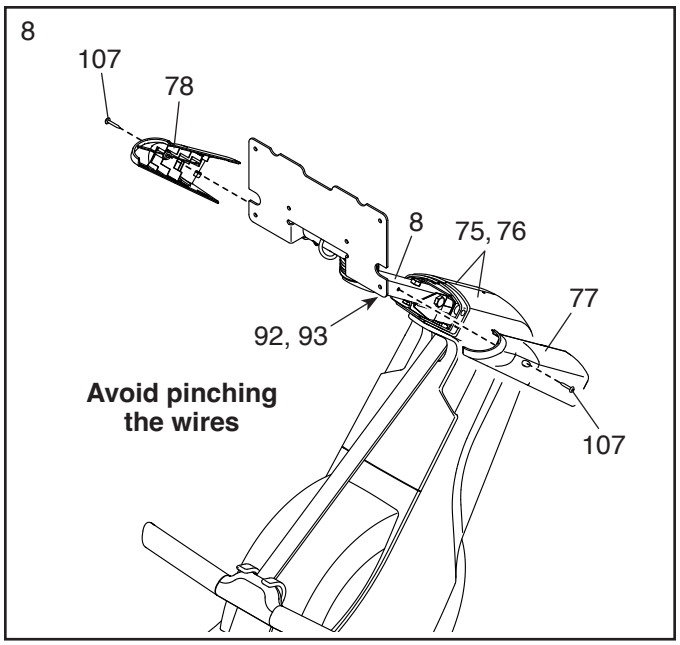

9. Orient the Seat (36) as indicated by the sticker, and slide it into the Rail (2).

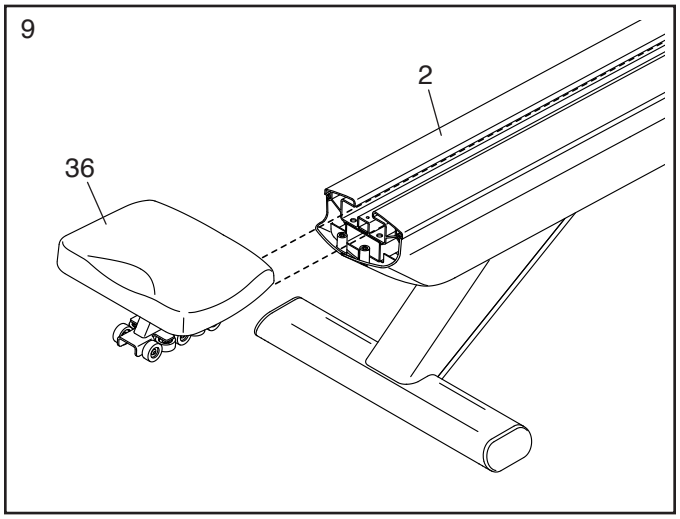

10. Orient the Rear Rail Bumper (38) as shown, and press it into the Rail (2).

    Next, attach the Rail End Cover (74) to the Right and Left Rail Shields (89, 90) with two M4 x 16mm Screws (107).

    Then, attach the Rail End Cover (74) and the Rear Rail Bumper (38) to the Rail (2) with an M4 x 16mm Screw (107).

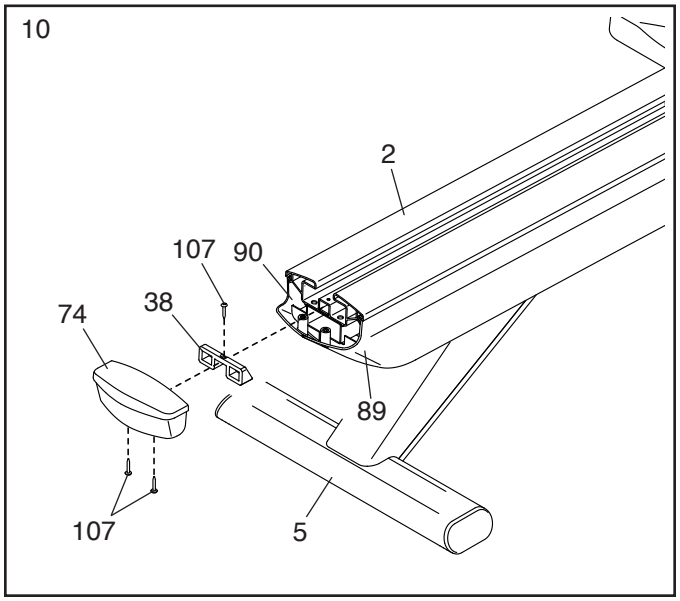

11. **IMPORTANT: Always plug the Power Adapter (136) into the rower before you plug it into an outlet.**

    Plug the Power Adapter (82) into the receptacle on the front of the rower.

    Note: To plug the Power Adapter (82) into an outlet, see HOW TO PLUG IN THE POWER ADAPTER on page 13.

    IMPORTANT: Keep the included tools in a secure location. You will need them for future adjustment and maintenance of your rower.

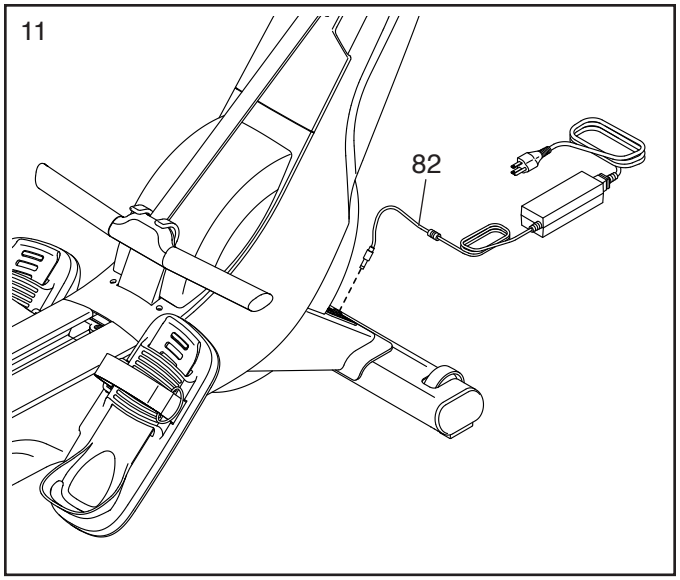

12. **Make sure that all parts are properly tightened before you use the rower.** Extra parts may be included. Place a mat under the rower to protect the floor.

    To register your product and activate your warranty today, go to my.nordictrack.com.

HOW TO USE THE ROWER

HOW TO PLUG IN THE POWER ADAPTER

IMPORTANT: If the rower has been exposed to cold temperatures, allow it to warm to room temperature before you plug in the power adapter (A). If you do not do this, you may damage the console displays or other electronic components.

IMPORTANT: Always plug the power adapter (A) into the rower before you plug it into an outlet.

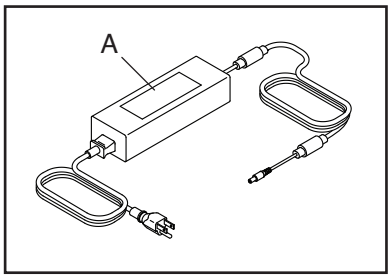

Make sure that the power adapter (A) is plugged into the receptacle on the front of the rower. Then, plug the power adapter into an appropriate outlet that is properly installed in accordance with all local codes and ordinances.

HOW TO MOVE THE ROWER

Take any necessary measures to avoid damaging your floor. Stand behind the rower and lift the rear stabilizer (B) until the rower will roll on the transport wheels (C). Carefully move the rower to the desired location, and then lower it to the floor.

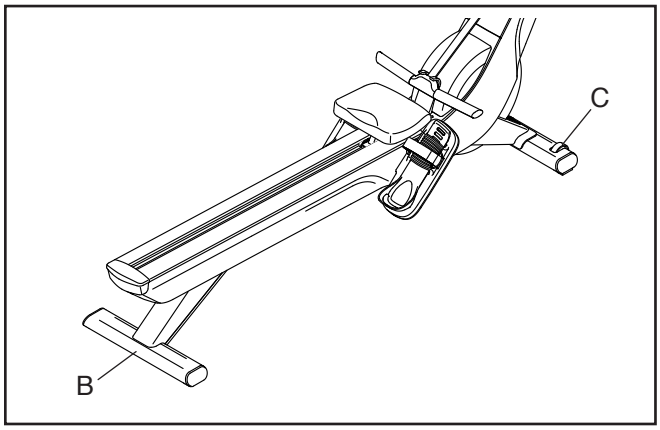

HOW TO LEVEL THE ROWER

If the rower rocks slightly on your floor during use, turn one or both of the leveling feet (D) beneath the rear stabilizer (B) until the rocking motion is eliminated.

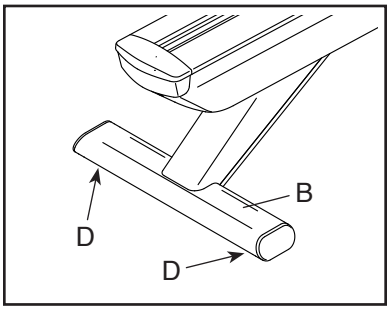

HOW TO ADJUST THE FOOTRESTS

First, sit on the seat and place your feet in the heel brackets (E).

Next, lift the front end of a heel bracket (E), slide the heel bracket to the desired position, and then lower the front end of the heel bracket so that the indicated tab (F) engages one of the slots in the heel bracket. Then, tighten the strap (G) over your foot.

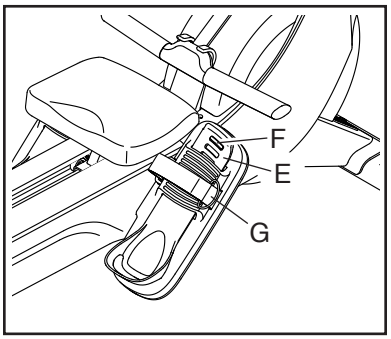

Adjust the other footrest in the same way. Make sure that both heel brackets (E) are in the same position.

HOW TO ADJUST THE POSITION OF THE CONSOLE

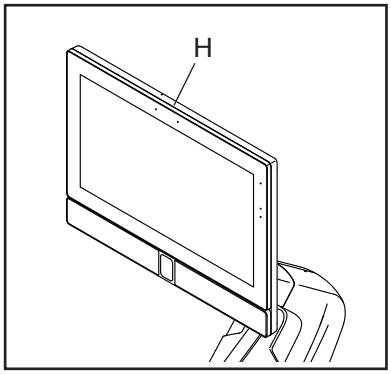

The console (H) can be adjusted upward, downward, or to the side. To adjust the position of the console, simply hold the sides of the console and press it to the desired position. You can pivot the console all of the way to the side so that you can view it while standing next to the rower to perform hand weight exercises or other floor exercises.

If the console feels loose or does not stay in place when it is moved up or down or from side to side, see HOW TO ADJUST THE CONSOLE PIVOT AND TILT on page 28.

HOW TO ROW ON THE ROWER

Sit on the seat, place your feet in the footrests, and adjust the straps to fit your feet. Then, hold the row bar with an overhand grip.

Correct rowing form consists of three phases:

1. **The first phase is the CATCH.** Slide the seat forward until your knees are almost touching your chest. Pull the row bar until your hands are directly above your feet.

2. **The second phase is the DRIVE.** Push backward with your legs. Lean back slightly at the hips (not at the waist), keeping your back straight. As you straighten your legs, pull the row bar toward your chest. Keep your elbows outward.

3. **The third phase is the FINISH.** Your legs should be nearly straight. Continue to pull the row bar until your hands are even with your chest.

After the finish phase, extend your arms forward and pull the seat forward using your legs. Repeat this sequence, moving through all three phases with a smooth, fluid motion. Remember to breathe normally as you row; never hold your breath.

HOW TO USE THE CONSOLE

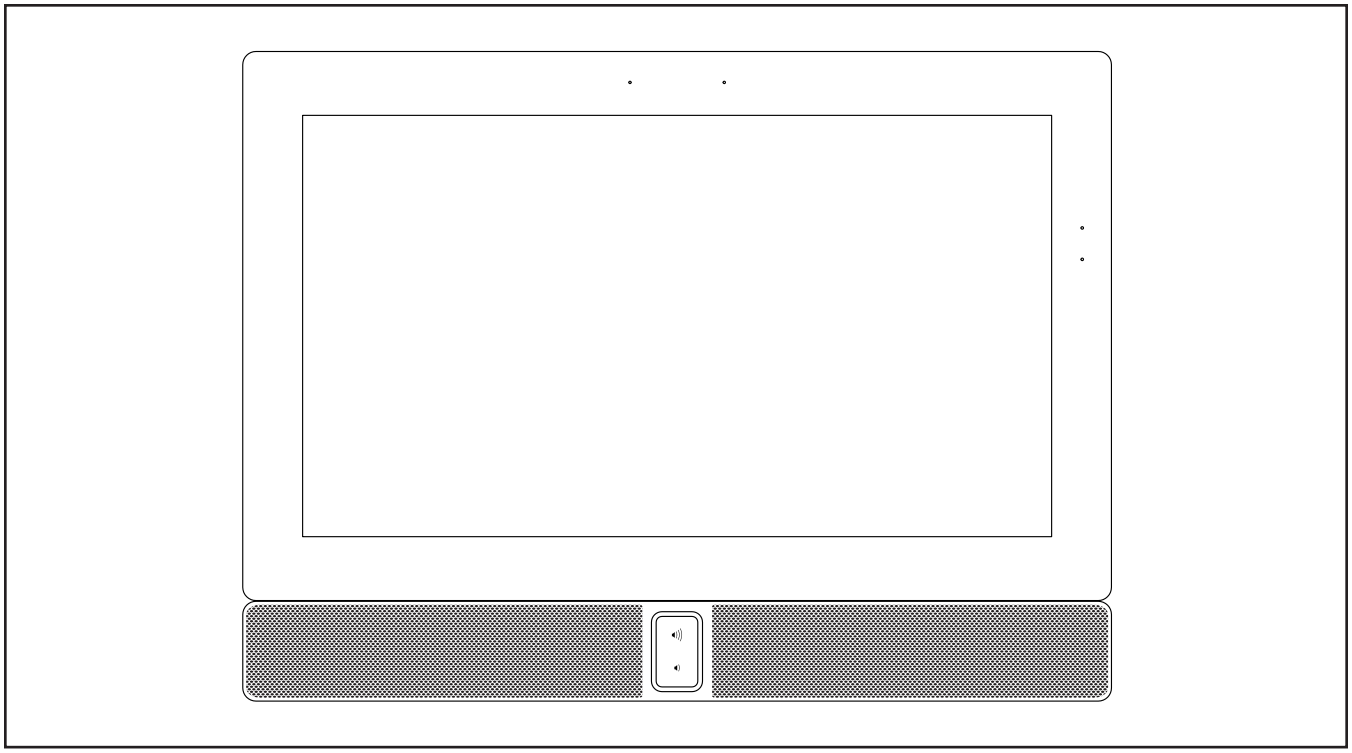

FEATURES OF THE CONSOLE

The advanced console offers a selection of features designed to make your workouts more effective and enjoyable.

When you use the manual mode of the console, you can change the resistance of the row bar with a touch of a button. As you exercise, the console will display continuous exercise feedback.

You can even monitor your heart rate when you use a compatible heart rate monitor. **To purchase a compatible heart rate monitor, see page 25.**

The console also features wireless technology that enables the console to connect to iFIT®. With an iFIT subscription, you can access a large and varied library of thousands of on-deman destination and studio workouts, create your own workouts, track your workout results, and access many other features.

Each iFIT workout automatically controls the resistance of the row bar as an iFIT trainer guides you through an immersive exercise session.

To turn on and turn off the console, see page 16. **To learn how to use the touch screen,** see page 16. **To set up the console,** see page 17.

HOW TO TURN ON THE CONSOLE

The included power adapter must be used to operate the rower. See HOW TO PLUG IN THE POWER ADAPTER on page 13.

When the power adapter is plugged in, press the power switch (A) located on the front of the rower to turn on the console. **Note: It may take up to a few minutes for the console to be ready for use.**

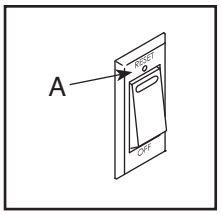

If the console is inactive, simply touch the screen to activate the console.

HOW TO TURN OFF THE CONSOLE

If the row bar does not move for several seconds, the console will pause.

If the row bar does not move for several minutes, the screen is not touched, and the buttons are not pressed, the console will become inactive.

When you are finished exercising, press the power switch and unplug the power adapter from the outlet. **IMPORTANT: If you do not do this, the electrical components on the rower may wear prematurely.**

HOW TO USE THE TOUCH SCREEN

The console features a tablet with a full-color touch screen. The following information will help you use the touch screen:

- The console functions similarly to other tablets. You can slide or flick your finger against the screen to move certain images on the screen, such as the displays in a workout.

- To type information into a text box, first touch the text box to view the keyboard. To use numbers or other characters on the keyboard, touch *?123*. To view more characters, touch *~[<*. Touch *?123* again to return to the number keyboard. To return to the letter keyboard, touch *ABC*. To use a capital character, touch the shift button (upward-facing arrow symbol). To use multiple capital characters, touch the shift button again. To return to the lowercase keyboard, touch the shift button a third time. To clear the last character, touch the clear button (backward-facing arrow with an X symbol).

HOW TO SET UP THE CONSOLE

Before you use the rower for the first time, set up the console.

1. **Connect to your wireless network.**

   To use iFIT workouts and to use several other features of the console, the console must be connected to a wireless network. Follow the prompts on the screen to connect the console to your wireless network.

2. **Customize settings.**

   Follow the prompts on the screen to set your time zone and other settings.

   Note: To change these settings later, see HOW TO CHANGE CONSOLE SETTINGS on page 23.

3. **Log into or create an iFIT account.**

   Follow the prompts on the screen to log into your iFIT account or to create an iFIT account.

4. **Check for firmware updates.**

   Touch the menu button (three horizontal lines symbol), touch *Settings,* touch *Maintenance,* and then touch *Update*. The console will check for firmware updates. For more information, see HOW TO CHANGE CONSOLE SETTINGS on page 23.

   Firmware updates are always designed to improve your exercise experience. As a result, new settings and features may not be described in this manual. Also, some settings and features described in this manual may no longer be enabled. Take time to explore the console to learn how new settings and features work.

The console is now ready for you to begin working out. The following pages explain the workouts and other features that the console offers.

To use the manual mode, see page 18. **To use a featured workout,** see page 19. **To create a draw-your-own-map workout,** see page 20. **To use an iFIT workout,** see page 21.

To change console settings, see page 23. **To connect to a wireless network,** see page 24.

Note: If there is a sheet of plastic on the screen, remove the plastic.

HOW TO USE THE MANUAL MODE

1. **Touch the screen or press any button on the console to turn on the console.**

   See HOW TO TURN ON THE CONSOLE on page 16. Note: **It may take up to a few minutes for the console to be ready for use.**

2. **Select the home screen.**

   When you turn on the console, the home screen will appear after the console boots up.

   If a workout is selected, touch the screen and follow the prompts to end the workout and return to the home screen. If a settings menu is selected, touch the back button (arrow symbol) to return to the home screen.

3. **Get ready for the workout.**

   Touch *Manual Start* and begin rowing. A warm-up period will begin.

   To use a heart rate monitor, see page 25.

   Touch *End Warmup* or row until the warm-up period ends to start the workout.

4. **Adjust the resistance to the desired level.**

   To change the resistance of the row bar, touch the resistance sliders on the screen.

   After you adjust the resistance, it will take a moment for the row bar to reach the selected resistance level.

   Note: To view the resistance sliders on the screen, touch the screen in any open space and then touch the controls options to enable this feature.

5. **Follow your progress.**

   The console offers several display modes. The display mode that you select will determine which workout information is shown.

   Drag upward on the screen to enter the fullscreen display mode. Drag downward on the screen to view the workout information displays.

   Touch the various workout information displays to view more options. Touch the more button (+ symbol) to view statistics or charts. Touch the screen in any open space to view even more display mode options.

   If desired, adjust the volume level by pressing the volume increase and decrease buttons on the console.

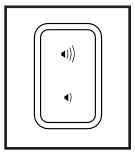

6. **Pause or end the workout.**

   To pause the workout, touch the screen and touch the pause option or simply stop rowing. To continue the workout, touch the start option or simply resume rowing.

   To end the workout session, touch the screen, touch the pause option, and then follow the prompts on the screen to end the workout and return to the home screen.

7. **When you are finished exercising, turn off the console.**

   See HOW TO TURN OFF THE CONSOLE on page 16.

HOW TO USE A FEATURED WORKOUT

To use a featured workout, the console must be connected to a wireless network (see HOW TO CONNECT TO A WIRELESS NETWORK on page 24).

1. **Touch the screen or press any button on the console to turn on the console.**

   See HOW TO TURN ON THE CONSOLE on page 16. **Note: It may take up to a few minutes for the console to be ready for use.**

2. **Select the home screen or the workout library.**

   When you turn on the console, the home screen will appear after the console boots up.

   If a workout is selected, touch the screen and follow the prompts to end the workout and return to the home screen. If a settings menu is selected, touch the back button (arrow symbol) to return to the home screen.

   Touch the buttons at the bottom of the screen to select either the home screen (Home button) or the workout library (Browse button).

3. **Select a workout.**

   To select a workout from the home screen or the workout library, simply touch the desired workout button on the screen. Slide or flick the screen to scroll as necessary.

   The featured workouts on your console will change periodically. To save one of the featured workouts for future use, you can add it as a favorite by touching the favorites button (heart symbol). You must be logged into your iFIT account to save a featured workout (see step 3 on page 21).

   To draw your own map for a workout, see HOW TO CREATE A DRAW-YOUR-OWN-MAP WORKOUT on page 20.

   When you select a workout, the screen will show an overview of the workout that includes details such as the duration and distance of the workout and the approximate number of calories you will burn during the workout.

4. **Get ready for the workout.**

   Touch *Manual Start* and begin rowing. A warm-up period will begin.

   To use Bluetooth® headphones, see page 25.

   To use a heart rate monitor, see page 25.

5. **Start the workout.**

   Touch *End Warmup* or row until the warm-up period ends to start the workout.

   During some workouts, an iFIT trainer will guide you through an immersive video workout. Touch the screen in any open space to view and select music, trainer voice, and volume options for the workout.

   During some workouts, the screen will show a map of the route and a marker indicating your progress. Touch the buttons on the screen to select the desired map options.

   During some workouts, you may be prompted to maintain a target speed. As you exercise, keep your rowing speed near the target speed.

   During the workout, the resistance of the row bar will automatically increase or decrease.

   If the resistance level is too high or too low, you can manually override the setting (see step 4 on page 18).

   To return to the programmed resistance settings of the workout, touch *Follow Workout*.

   If the smart adjust feature is enabled, the console will scale the intensity level of the workout automatically based on your manual overrides of the resistance.

   To enable the smart adjust feature, touch the screen in any open space and then touch the smart adjust toggle.

IMPORTANT: The calorie goal shown in the workout description is an estimate of the number of calories that you will burn during the workout. The actual number of calories that you burn will depend on various factors, such as your weight. In addition, if you manually change the resistance level during the workout, the number of calories you burn will be affected.

If the active pulse feature is enabled, the console will scale the intensity level of the workout automatically based on your heart rate when you use a compatible heart rate monitor (see HOW TO USE AN OPTIONAL HEART RATE MONITOR on page 25).

To enable the active pulse feature, see HOW TO CHANGE CONSOLE SETTINGS on page 23.

To follow your progress with the display modes, see step 5 on page 18.

To pause or end the workout, see step 6 on page 18.

6. **When you are finished exercising, turn off the console.**

   See HOW TO TURN OFF THE CONSOLE on page 16.

HOW TO CREATE A DRAW-YOUR-OWN-MAP WORKOUT

To use a draw-your-own-map workout, you must be logged into your iFIT account (see step 3 on page 21) and the console must be connected to a wireless network (see HOW TO CONNECT TO A WIRELESS NETWORK on page 24).

1. **Touch the screen or press any button on the console to turn on the console.**

   See HOW TO TURN ON THE CONSOLE on page 16. **Note: It may take up to a few minutes for the console to be ready for use.**

2. **Select a draw-your-own-map workout.**

   When you turn on the console, the home screen will appear after the console boots up.

   If a workout is selected, touch the screen and follow the prompts to end the workout and return to the home screen. If a settings menu is selected, touch the back button (arrow symbol) to return to the home screen.

   To select a draw-your-own-map workout, touch the Create button at the bottom of the screen.

3. **Draw a workout on the map.**

   Navigate to the area on the map where you want to draw a workout by typing in the search box or by sliding your fingers on the screen. Touch the screen to add the start point for the workout. Then, touch the screen to add the end point for the workout.

   If you want to start and end the workout at the same point, touch *Close Loop* or *Out & Back* in the map options. You can also select whether you want the workout to snap to the road.

   If you make a mistake, touch *Undo* in the map options.

   The screen will display the elevation and distance statistics for the workout.

4. **Save the workout.**

   Touch the options on the screen to save the workout. If desired, enter a title and description for the workout.

5. **Get ready for the workout.**

   Touch *Manual Start* and begin rowing. A warm-up period will begin.

   To use Bluetooth® headphones, see page 25.

   To use a heart rate monitor, see page 25.

6. **Start the workout.**

   Touch *End Warmup* or row until the warm-up period ends to start the workout. The workout will function in the same way as a featured workout (see step 5 on page 19).

7. **When you are finished exercising, turn off the console.**

   See HOW TO TURN OFF THE CONSOLE on page 16.

HOW TO USE AN IFIT WORKOUT

To use an iFIT workout, you must be logged into your iFIT account (see step 3 below) and the console must be connected to a wireless network (see HOW TO CONNECT TO A WIRELESS NETWORK on page 24).

1. **Touch the screen or press any button on the console to turn on the console.**

   See HOW TO TURN ON THE CONSOLE on page 16. **Note: It may take up to a few minutes for the console to be ready for use.**

2. **Select the home screen.**

   When you turn on the console, the home screen will appear after the console boots up.

   If a workout is selected, touch the screen and follow the prompts to end the workout and return to the home screen. If a settings menu is selected, touch the back button (arrow symbol) to return to the home screen.

3. **Log in to your iFIT account.**

   If you have not already done so, touch the menu button (three horizontal lines symbol) on the screen and then touch *Log in* to log in to your iFIT account. Follow the prompts on the screen to enter your username and password.

   To switch users within your iFIT account, touch the menu button, touch Settings, and then touch *Manage Accounts*. If more than one user is associated with the account, a list of users will appear. Touch the name of the desired user.

4. **Select an iFIT workout from the home screen or the workout library.**

   Touch the buttons at the bottom of the screen to select either the home screen (Home button) or the workout library (Browse button).

   To select an iFIT workout from the home screen or the workout library, simply touch the desired workout button on the screen. Slide or flick the screen to scroll as necessary.

   The featured iFIT workouts shown on the home screen will change periodically.

   The workout library contains all of the iFIT workouts available for the rower, organized into categories. To search the workout library, touch the search button (magnifying glass symbol), and select the desired filtering options.

   When you select an iFIT workout, the screen will show an overview of the workout that includes details such as the duration of the workout and the approximate number of calories you will burn during the workout.

   You can also select options such as adding the workout to your schedule (see step 5) or marking the workout as a favorite (see step 6).

5. **Schedule an iFIT workout on the calendar if desired.**

   If desired, you can schedule an iFIT workout for a future date. Simply view the overview or workout summary of the desired iFIT workout, touch *Schedule,* and then select the desired date on the calendar.

   When the selected date arrives, the iFIT workout that you scheduled will appear on the home screen.

6. **Create a list of favorite iFIT workouts if desired.**

   To mark an iFIT workout as a favorite, simply view the overview or workout summary of the desired iFIT workout and touch the favorites button (heart symbol).

   To view a list of iFIT workouts that you have marked as your favorites, select the workout library (Browse button), and then touch *My List*.

7. **Get ready for the workout.**

   Touch *Manual Start* and begin rowing. A warm-up period will begin.

   To use Bluetooth® headphones, see page 25.

   To use a heart rate monitor, see page 25.

8. **Start the workout.**

   Touch *End Warmup* or row until the warm-up period ends to start the workout. The workout will function in the same way as a featured workout (see step 5 on page 19).

9. **When you are finished exercising, turn off the console.**

   See HOW TO TURN OFF THE CONSOLE on page 16.

For more information about iFIT, go to iFIT.com.

HOW TO CHANGE CONSOLE SETTINGS

IMPORTANT: Firmware updates (see step 6) are always designed to improve your exercise experience. As a result, new settings and features may not be described in this manual. Also, some settings and features described in this manual may no longer be enabled. Take time to explore the console to learn how new settings and features work.

1. **Select the settings main menu.**

   First, turn on the console (see HOW TO TURN ON THE CONSOLE on page 16). **Note: It may take up to a few minutes for the console to be ready for use.**

   Next, select the home screen (Home button). When you turn on the console, the home screen will appear after the console boots up. If a workout is selected, touch the screen and follow the prompts to end the workout and return to the home screen. If a settings menu is selected, touch the back button (arrow symbol) to return to the home screen.

   Then, touch the menu button (three horizontal lines symbol) on the screen, and then touch *Settings*. The settings menu will appear on the screen.

2. **Navigate the settings menus and change settings as desired.**

   Slide or flick the screen to scroll as necessary. To view a settings menu, simply touch the menu name. To exit a menu, touch the back button (arrow symbol). You may be able to view and change settings in the following settings menus:

   Account
   - My Profile
   - In Workout
   - Manage Accounts

   Equipment
   - Equipment Info
   - Equipment Settings
   - Maintenance
   - Wi-Fi

   About
   - Legal

3. **Customize workout settings.**

   To customize workout settings and enable workout features, touch *In Workout* and then touch the desired settings.

   When the active pulse feature is enabled, the console will scale the intensity level of workouts based on your heart rate when you use a compatible heart rate monitor. To enable the active pulse feature, touch the active pulse toggle. Then, select your resting and maximum heart rates and adjust related settings as desired.

4. **Customize the unit of measurement and other settings.**

   To customize the unit of measurement, the time zone, or other settings, touch *Equipment Info* or *Equipment Settings* and then touch the desired settings.

5. **View machine information or console app information.**

   Touch *Equipment Info* and then touch *Machine Info* or *App Info* to view information about your rower or about the console app.

6. **Update the console firmware.**

   For the best results, regularly check for firmware updates. Touch *Maintenance* and then touch *Update* to check for firmware updates using your wireless network. The update will begin automatically. **IMPORTANT: To avoid damaging the rower, do not turn off the console while the firmware is being updated.**

   The screen will show the progress of the update. When the update is complete, the console will turn off and then turn back on. If it does not, press the power switch and unplug the power adapter, wait for several seconds, and then plug in the power adapter again and press the power switch. Note: It may take a few minutes for the console to be ready for use.

   Note: Occasionally, a firmware update may cause the console to function slightly differently. These updates are always designed to improve your exercise experience.

7. **Exit the settings main menu.**

   To exit the settings main menu, touch the back button (arrow symbol).

HOW TO CONNECT TO A WIRELESS NETWORK

To use iFIT workouts and to use several other features of the console, the console must be connected to a wireless network.

1. **Select the home screen.**

   First, turn on the console (see HOW TO TURN ON THE CONSOLE on page 16). **Note: It may take up to a few minutes for the console to be ready for use.**

   Next, select the home screen (Home button). When you turn on the console, the home screen will appear after the console boots up. If a workout is selected, touch the screen and follow the prompts to end the workout and return to the home screen. If a settings menu is selected, touch the back button (arrow symbol) to return to the home screen.

2. **Select the wireless network menu.**

   Touch the menu button (three horizontal lines symbol) and then touch *Wi-Fi* to select the wireless network menu.

3. **Enable Wi-Fi®.**

   Make sure that Wi-Fi is enabled. If it is not enabled, touch the *Wi-Fi* toggle to enable it.

4. **Set up and manage a wireless network connection.**

   When Wi-Fi is enabled, the screen will show a list of available networks. Note: It may take a few moments for the list of wireless networks to appear.

   Note: You must have your own wireless network and an 802.11b/g/n router with SSID broadcast enabled (hidden networks are not supported).

   When a list of networks appears, touch the desired network. Note: You will need to know your network name (SSID). If your network has a password, you will also need to know the password.

Follow the prompts on the screen to enter your password and connect to the selected wireless network. (To use the keyboard, see HOW TO USE THE TOUCH SCREEN on page 16.)

When the console is connected to your wireless network, a confirmation message will appear on the screen.

If you are having problems connecting to an encrypted network, make sure that your password is correct. Note: Passwords are case-sensitive.

Note: The console supports unsecured and secured (WEP, WPA™, and WPA2™) encryption. A broadband connection is recommended; performance depends on connection speed.

Note: If you have questions after following these instructions, go to my.iFIT.com for assistance.

5. **Exit the wireless network menu.**

   To exit the wireless network menu, touch the back button (arrow symbol).

HOW TO CONNECT HEADPHONES

To connect your Bluetooth headphones to the console, first turn on your headphones, place them in pairing mode, and place them near the console. Then, start a workout. Next, touch the screen in any open space, touch the option to connect your headphones, and select your headphones from the list on the screen.

When your headphones and the console pair successfully, the audio from the console will play through your headphones.

HOW TO USE AN OPTIONAL HEART RATE MONITOR

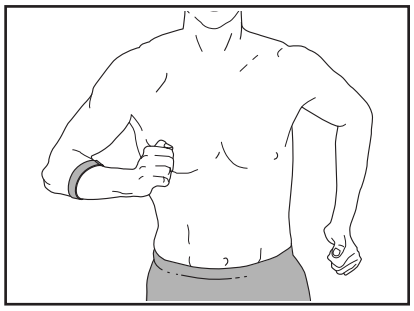

Whether your goal is to burn fat or to strengthen your cardiovascular system, the key to achieving the best results is to maintain the proper heart rate during your workouts. The optional heart rate monitor will enable you to continuously monitor your heart rate while you exercise, helping you to reach your personal fitness goals. **To purchase an optional heart rate monitor, please see the front cover of this manual.**

The console is compatible with all Bluetooth® Smart heart rate monitors.

When your compatible heart rate monitor is turned on and placed in pairing mode, the console will connect to it automatically. When your heartbeat is detected, your heart rate will be shown on the screen.

FCC INFORMATION

This equipment has been tested and found to comply with the limits for a Class B digital device, pursuant to part 15 of the FCC Rules. These limits are designed to provide reasonable protection against harmful interference in a residential installation. This equipment generates, uses, and can radiate radio frequency energy and, if not installed and used in accordance with the instructions, may cause harmful interference to radio communications. However, there is no guarantee that interference will not occur in a particular installation. If this equipment does cause harmful interference to radio or television reception, which can be determined by turning the equipment off and on, try to correct the interference by one or more of the following measures:

- Reorient or relocate the receiving antenna.
- Increase the separation between the equipment and the receiver.
- Connect the equipment into an outlet on a circuit different from that to which the receiver is connected.
- Consult the dealer or an experienced radio/TV technician for help.

FCC CAUTION: To assure continued compliance, use only shielded interface cables when connecting to computer or peripheral devices. Changes or modifications not expressly approved by the party responsible for compliance could void the user's authority to operate this equipment.

IMPORTANT: To satisfy exposure compliance requirements, the antenna and transmitter in the console must be at least 8 in. (20 cm) from all persons and must not be near or connected to any other antenna or transmitter.

Note: The console contains FCC ID: OMC421914.

MAINTENANCE AND TROUBLESHOOTING

MAINTENANCE

Regular maintenance is important for optimal performance and to reduce wear. Inspect and properly tighten all parts each time the rower is used. **Replace any worn parts immediately.** Use only manufacturer-supplied parts.

To clean the rower, use a damp cloth and a small amount of mild detergent. **IMPORTANT: To avoid damage to the console, keep liquids away from the console and keep the console out of direct sunlight.**

RAIL MAINTENANCE

Regularly clean the rollers beneath the seat and the area of the rail over which the rollers move. First, see assembly step 10 on page 11 and remove the Rail End Cover (74) and the Rear Rail Bumper (38). Next, remove the seat assembly from the rail. Then, use a damp cloth and a small amount of mild detergent to remove dust and debris from the rollers and from the rail.

TROUBLESHOOTING

Some problems can be solved with the simple steps in this section. Find the symptom that applies, and follow the steps listed. If further assistance is needed, go to my.iFIT.com, scan the QR code at the right, or call 1-833-680-IFIT (1-833-680-4348).

CONSOLE TROUBLESHOOTING

If the console does not turn on, make sure that the power adapter is fully plugged in.

If you are having problems connecting the console to a wireless network, or if you are having problems with your iFIT account or iFIT workouts, go to my.iFIT.com.

If a replacement power adapter is needed, see the Member Care contact information at the left. IMPORTANT: To avoid damaging the console, use only a manufacturer-supplied regulated power adapter.

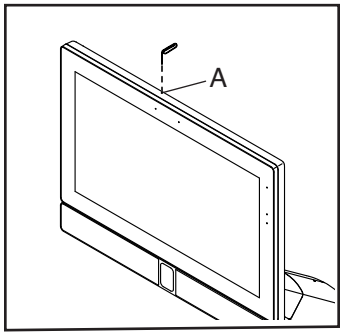

If the console does not boot up properly, or if the console freezes and does not respond, reset the console to the factory default settings. **IMPORTANT: Doing this will erase all custom settings you have made to the console.** Resetting the console requires two people. First, unplug the power adapter. Next, locate the small reset opening (A) on the top of the console. Using a bent paper clip, press and hold the reset button inside of the opening, and have a second person plug in the power adapter. Continue holding the reset button until the console turns on. When the reset operation is complete, the console will turn off and then turn back on. If it does not, unplug the power adapter and then plug it back in. Once the console turns on, check for firmware updates (see HOW TO CHANGE CONSOLE SETTINGS on page 23). **Note: It may take up to a few minutes for the console to be ready for use.**

HOW TO ADJUST THE CONSOLE PIVOT AND TILT

If the console feels loose or does not stay in place when it is moved from side to side, first remove the Mount Cover (12). Next, use the included tool to slightly tighten the M25 Locknut (17) until the console stays in place when moved from side to side. Then, press the Mount Cover back into place.

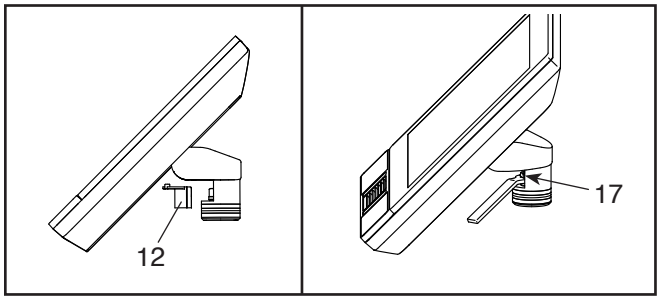

If the console feels loose or does not stay in place when it is tilted upward and downward, first use a standard screwdriver to pry off the Upper and Lower Console Covers (22, 23).

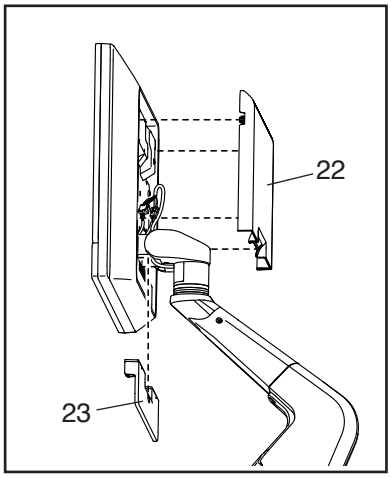

(Note: For clarity, the console is not shown in the drawing at the right.) Tighten the four M6 x 16mm Screws (96) in the Rear Bracket Mount (10) until the upward and downward movement no longer feels loose. Tilt the console upward and downward to access the Screws. Then, reattach the Upper and Lower Console Covers (22, 23).

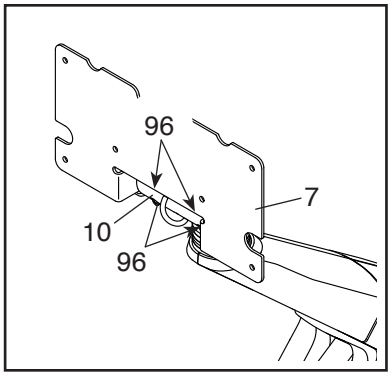

HOW TO ADJUST THE REED SWITCH

If the console does not display correct feedback, the reed switch should be adjusted. To adjust the reed switch, **first unplug the power adapter.**

Next, remove the Row Bar (19) from the Row Bar Hook (88). Then, remove the two M4 x 16mm Screws (107) from the Flywheel Cover (86). Pivot the Flywheel Cover upward and remove it from the rower.

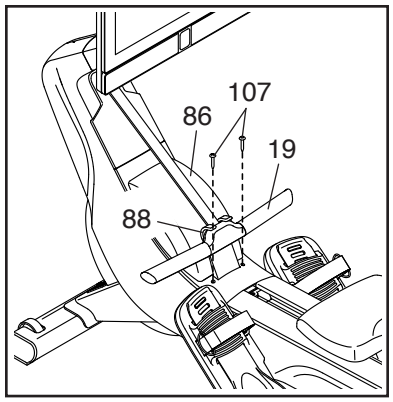

Next, locate the Reed Switch (67). Turn the Flywheel (60) until a Flywheel Magnet (81) is aligned with the Reed Switch. Then, slightly loosen the two indicated M4 x 16mm Screws (107), slide the Reed Switch slightly closer to or away from the Flywheel Magnet, and then retighten the Screws.

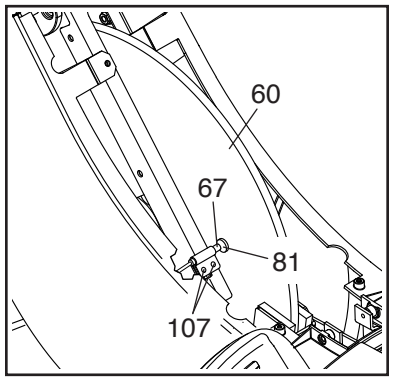

Plug in the power adapter, and then turn the Flywheel (60) so that the Flywheel Magnet (81) passes the Reed Switch (67) repeatedly. Repeat the actions described above until the console displays correct feedback.

When the reed switch is correctly adjusted, reattach the parts that you removed.

HOW TO ADJUST THE DRIVE BELT

If you feel the strap slip while you are rowing, even when the resistance is adjusted to the highest level, the drive belt may need to be adjusted. **To adjust the drive belt, first unplug the power adapter.**

Next, see assembly step 8 on page 11. Remove the Right and Left Neck Shields (77, 78) from the rower.

Next, remove the Row Bar (19) from the Row Bar Hook (88). Note: For clarity, the console is not shown in the drawing below.

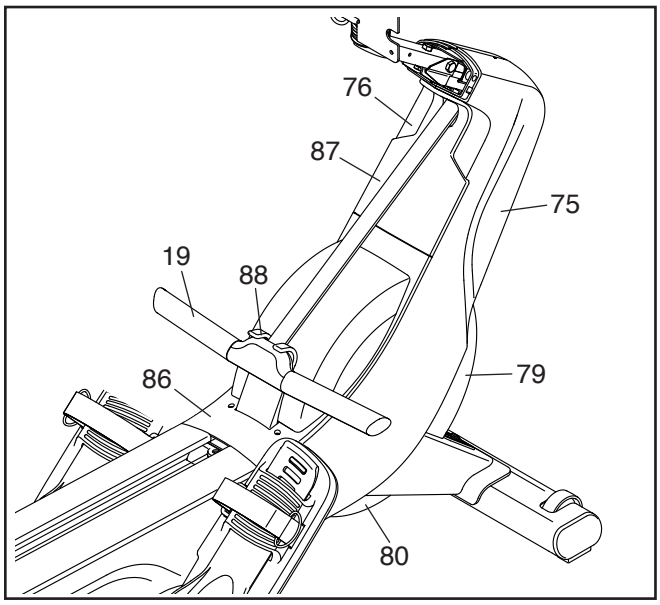

Then, remove the Flywheel Cover (86), the Strap Cover (87), the Front Cover (79), the Bottom Cover (80), and the Right and Left Shields (75, 76) from the rower. **To locate the screws that attach each part, see EXPLODED DRAWING A on page 34. IMPORTANT: There are different sizes of screws. Make sure to note which size of screw you remove from each hole.**

Note: You will need the help of a second person to tip the rower to the side so that you can access the Bottom Cover (80).

Next, locate the Drive Belt (99) on the right side of the rower. Loosen the two M10 x 20mm Screws (101). Next, tighten the M10 x 55mm Set Screw (42) until the Drive Belt is tight. Then, tighten the two M10 x 20mm Screws.

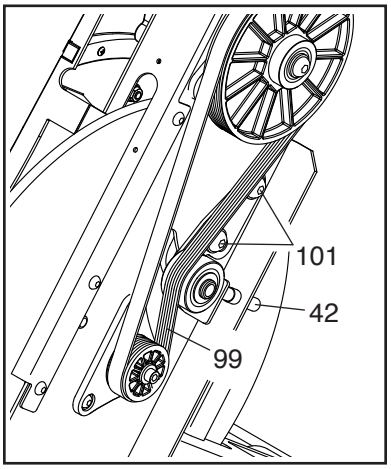

When the Drive Belt (99) is tight, reattach the parts that you removed.

EXERCISE GUIDELINES

⚠ WARNING: Before beginning this or any exercise program, consult your physician. This is especially important for persons over age 35 or persons with pre-existing health problems.

These guidelines will help you to plan your exercise program. For detailed exercise information, obtain a reputable book or consult your physician. Remember, proper nutrition and adequate rest are essential for successful results.

EXERCISE INTENSITY

Whether your goal is to burn fat or to strengthen your cardiovascular system, exercising at the proper intensity is the key to achieving results. You can use your heart rate as a guide to find the proper intensity level. The chart below shows recommended heart rates for fat burning and aerobic exercise.

165	*155*	*145*	*140*	*130*	*125*	*115*	♥
145	*138*	*130*	*125*	*118*	*110*	*103*	♥
125	*120*	*115*	*110*	*105*	*95*	*90*	♥
20	*30*	*40*	*50*	*60*	*70*	*80*	

To find the proper intensity level, find your age at the bottom of the chart (ages are rounded off to the nearest ten years). The three numbers listed above your age define your "training zone." The lowest number is the heart rate for fat burning, the middle number is the heart rate for maximum fat burning, and the highest number is the heart rate for aerobic exercise.

Burning Fat—To burn fat effectively, you must exercise at a low intensity level for a sustained period of time. During the first few minutes of exercise, your body uses carbohydrate calories for energy. Only after the first few minutes of exercise does your body begin to use stored fat calories for energy. If your goal is to burn fat, adjust the intensity of your exercise until your heart rate is near the lowest number in your training zone. For maximum fat burning, exercise with your heart rate near the middle number in your training zone.

Aerobic Exercise—If your goal is to strengthen your cardiovascular system, you must perform aerobic exercise, which is activity that requires large amounts of oxygen for prolonged periods of time. For aerobic exercise, adjust the intensity of your exercise until your heart rate is near the highest number in your training zone.

HOW TO MEASURE YOUR HEART RATE

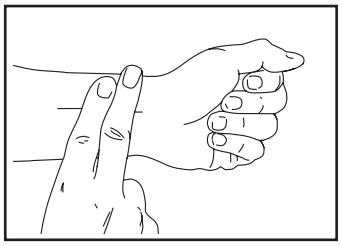

To measure your heart rate, exercise for at least four minutes. Then, stop exercising and place two fingers on your wrist as shown. Take a six-second heartbeat count, and multiply the result by 10 to find your heart rate. For example, if your six-second heartbeat count is 14, your heart rate is 140 beats per minute.

WORKOUT GUIDELINES

Warming Up—Start with 5 to 10 minutes of stretching and light exercise. A warm-up increases your body temperature, heart rate, and circulation in preparation for exercise.

Training Zone Exercise—Exercise for 20 to 30 minutes with your heart rate in your training zone. (During the first few weeks of your exercise program, do not keep your heart rate in your training zone for longer than 20 minutes.) Breathe regularly and deeply as you exercise; never hold your breath.

Cooling Down—Finish with 5 to 10 minutes of stretching. Stretching increases the flexibility of your muscles and helps to prevent post-exercise problems.

EXERCISE FREQUENCY

To maintain or improve your condition, complete three workouts each week, with at least one day of rest between workouts. After a few months of regular exercise, you may complete up to five workouts each week, if desired. Remember, the key to success is to make exercise a regular and enjoyable part of your everyday life.

SUGGESTED STRETCHES

The correct form for several basic stretches is shown at the right. Move slowly as you stretch; never bounce.

1. Toe Touch Stretch

Stand with your knees bent slightly and slowly bend forward from your hips. Allow your back and shoulders to relax as you reach down toward your toes as far as possible. Hold for 15 counts, then relax. Repeat 3 times. Stretches: Hamstrings, back of knees and back.

2. Hamstring Stretch

Sit with one leg extended. Bring the sole of the opposite foot toward you and rest it against the inner thigh of your extended leg. Reach toward your toes as far as possible. Hold for 15 counts, then relax. Repeat 3 times for each leg. Stretches: Hamstrings, lower back and groin.

3. Calf/Achilles Stretch

With one leg in front of the other, reach forward and place your hands against a wall. Keep your back leg straight and your back foot flat on the floor. Bend your front leg, lean forward and move your hips toward the wall. Hold for 15 counts, then relax. Repeat 3 times for each leg. To cause further stretching of the achilles tendons, bend your back leg as well. Stretches: Calves, achilles tendons and ankles.

4. Quadriceps Stretch

With one hand against a wall for balance, reach back and grasp one foot with your other hand. Bring your heel as close to your buttocks as possible. Hold for 15 counts, then relax. Repeat 3 times for each leg. Stretches: Quadriceps and hip muscles.

5. Inner Thigh Stretch

Sit with the soles of your feet together and your knees outward. Pull your feet toward your groin area as far as possible. Hold for 15 counts, then relax. Repeat 3 times. Stretches: Quadriceps and hip muscles.

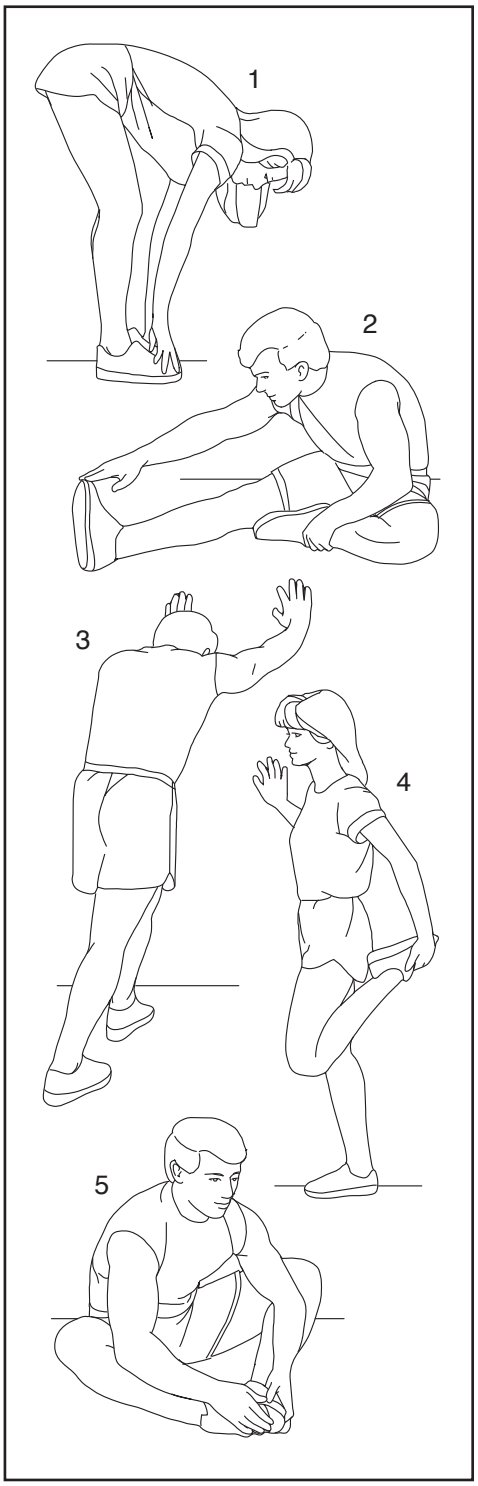

PART LIST

Model No. NTRW19423.1 R1122A

Key No.	Qty.	Description
1	1	Frame
2	1	Rail
3	1	Bar
4	1	Front Stabilizer
5	1	Rear Stabilizer
6	1	Console
7	1	Console Bracket
8	1	Neck
9	1	Front Bracket Mount
10	1	Rear Bracket Mount
11	2	Inner Pivot Bushing
12	1	Mount Cover
13	2	Upper/Lower Pivot Disc
14	1	Center Pivot Disc
15	1	Thrust Washer
16	1	Plastic Washer
17	1	M25 Locknut
18	1	Strap
19	1	Row Bar
20	1	Upper Row Bar Cover
21	1	Lower Row Bar Cover
22	1	Upper Console Cover
23	1	Lower Console Cover
24	2	Leveling Foot
25	4	Stabilizer Cap
26	2	Transport Wheel
27	1	Right Footrest Bracket
28	1	Left Footrest Bracket
29	1	Right Footrest
30	1	Left Footrest
31	1	Right Footrest Bottom
32	1	Left Footrest Bottom
33	1	Right Heel Bracket
34	1	Left Heel Bracket
35	2	Footrest Strap
36	1	Seat
37	1	Carriage
38	1	Rear Rail Bumper
39	10	Carriage Roller
40	2	Foot
41	1	Small Strap Guide Assembly
42	1	M10 x 55mm Set Screw
43	2	Frame Axle
44	1	Roller
45	1	Return Pulley
46	1	Right Saddle Block/Bearing
47	1	Left Saddle Block/Bearing
48	1	Large Strap Guide
49	1	Return Pulley Spacer
50	1	Return Axle
51	1	Strap Guide Spacer
52	1	Snap Ring
53	1	Spring Bushing
54	1	Return Spring
55	1	Idler
56	1	Flywheel Pulley
57	2	Flywheel Saddle Block/Bearing
58	2	Flywheel Bushing
59	1	Flywheel Hub
60	1	Flywheel
61	1	Frame Support
62	1	Power Panel
63	1	Power Switch
64	1	Power Receptacle/Wire
65	1	Reed Switch Bracket
66	1	Clamp
67	1	Reed Switch/Wire
68	1	Magnet Bracket
69	1	Block
70	1	Arm
71	1	Motor Disc
72	1	Resistance Motor
73	1	Motor Bracket
74	1	Rail End Cover
75	1	Right Shield
76	1	Left Shield
77	1	Right Neck Shield
78	1	Left Neck Shield
79	1	Front Cover
80	1	Bottom Cover
81	2	Flywheel Magnet
82	1	Power Adapter
83	1	Power Cord
84	6	Roller Axle
85	1	Top Cover
86	1	Flywheel Cover
87	1	Strap Cover
88	1	Row Bar Hook
89	1	Right Rail Shield
90	1	Left Rail Shield
91	1	Stabilizer Cover
92	1	Main Wire
93	1	Neck Wire
94	1	Row Bar Tube
95	8	Crown Fastener
96	4	M6 x 16mm Screw
97	4	M4 x 10mm Screw
98	2	M8 x 55mm Screw
99	1	Drive Belt
100	8	M10 x 35mm Screw

Key No.	Qty.	Description	Key No.	Qty.	Description
101	4	M10 x 20mm Screw	120	2	M4 x 25mm Screw
102	1	M10 x 100mm Screw	121	1	M8 Locknut
103	2	M10 x 60mm Screw	122	1	M6 x 40mm Socket Bolt
104	10	M4 x 19mm Screw	123	5	M6 Locknut
105	1	M10 x 40mm Screw	124	4	M5 x 10mm Screw
106	1	M5 x 16mm Flat Head Screw	125	1	Front Rail Bumper
107	40	M4 x 16mm Screw	126	4	M6 x 20mm Screw
108	5	M10 x 15mm Flat Head Screw	127	1	Key
109	1	M3 x 8mm Screw	128	1	M6 x 16mm Washer
110	23	M4 x 12mm Screw	129	2	M8 Washer
111	2	M6 x 12mm Shoulder Screw	130	2	M8 x 16mm Screw
112	1	17mm C-clip	131	1	M8 x 65mm Bolt
113	2	M5 Nut	132	3	M6 x 30mm Screw
114	7	M10 x 55mm Screw	133	2	M10 Washer
115	12	M6 x 14mm Screw	134	1	Lower Rail End Cover
116	14	M5 Washer	135	4	M6 Shoulder Bolt
117	13	M5 x 8mm Screw	136	4	Roller Spacer
118	23	M6 x 12mm Screw	*	–	User's Manual
119	1	M10 x 65mm Screw	*	–	Assembly Tools

Note: Specifications are subject to change without notice. For information about ordering replacement parts, see the back cover of this manual. *These parts are not illustrated.

EXPLODED DRAWING A

Model No. NTRW19423.1 R1122A

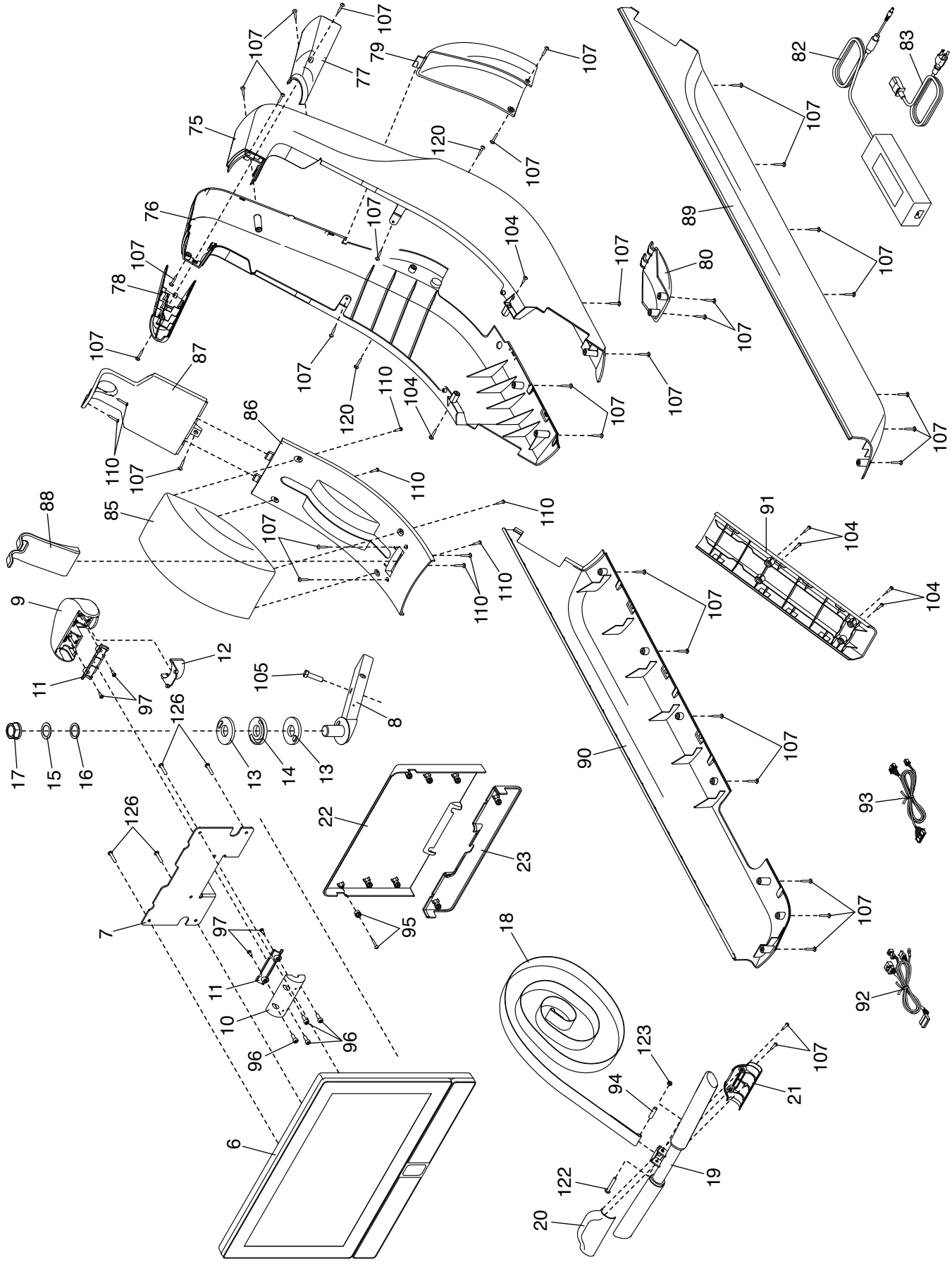

EXPLODED DRAWING B

Model No. NTRW19423.1 R1122A

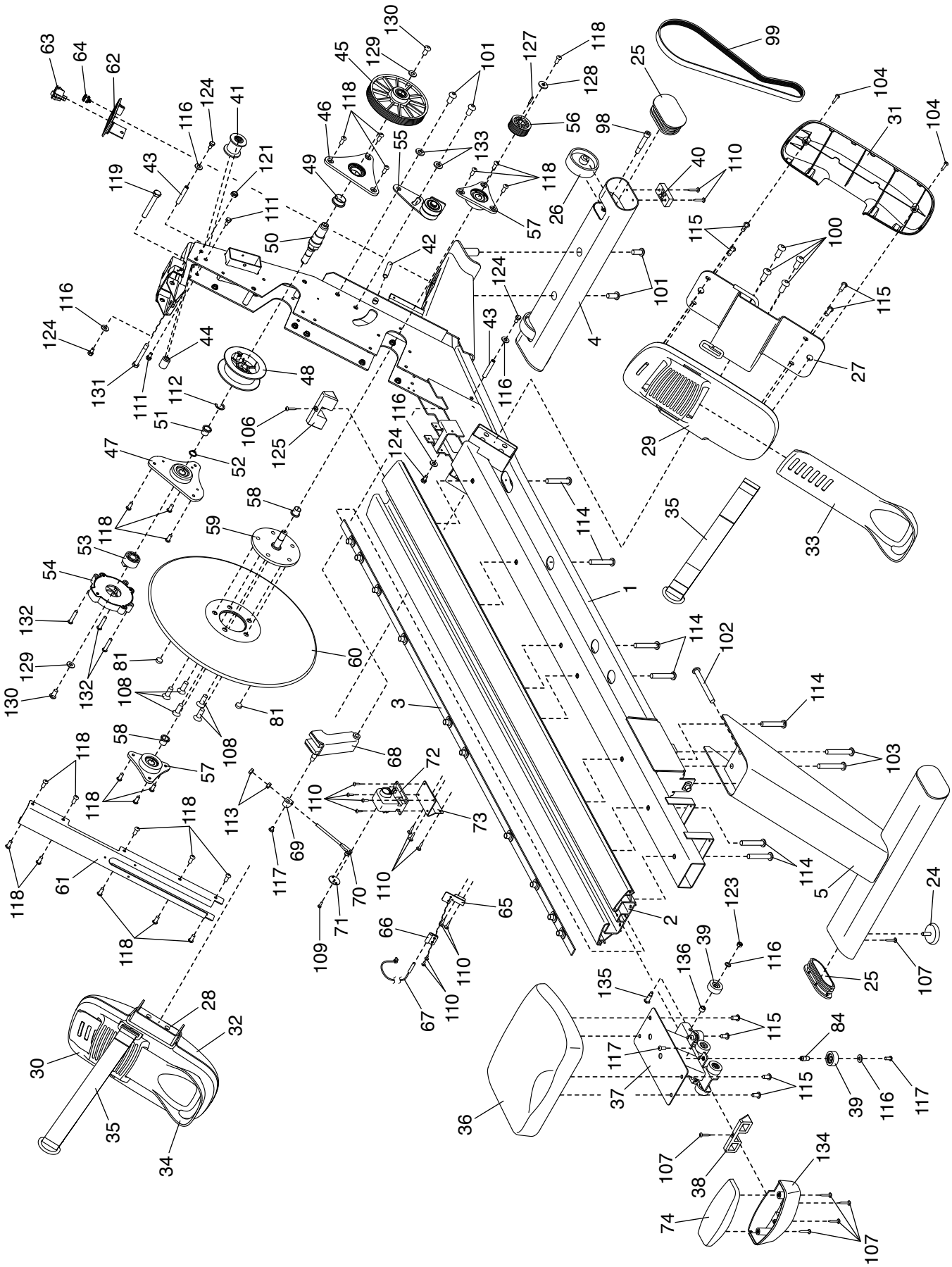

ORDERING REPLACEMENT PARTS

To order replacement parts, please see the front cover of this manual. To help us assist you, be prepared to provide the following information when contacting us:

- the model number and serial number of the product (see the front cover of this manual)
- the name of the product (see the front cover of this manual)
- the key number and description of the replacement part(s) (see the PART LIST and the EXPLODED DRAWING near the end of this manual)

LIMITED WARRANTY

IMPORTANT: To protect your fitness equipment with an extended service plan, see page 4.

iFIT Inc. (iFIT) warrants this product to be free from defects in workmanship and material, under normal use and service conditions. The frame is warranted for ten (10) years from the date of purchase. Parts are warranted for two (2) years from the date of purchase. Labor is warranted for one (1) year.

This warranty extends only to the original purchaser (customer) and is not transferrable. iFIT's obligation under this warranty is limited to repairing or replacing, at iFIT's discretion, the product through one of its authorized service providers. All repairs for which warranty claims are made must be preauthorized by iFIT. If replacement parts are shipped while the product is under warranty, the customer will be responsible for a minimal handling charge. For in-home service, the customer may be responsible for a minimal trip charge. This warranty does not extend to freight damage to the product. This warranty will automatically be voided by the following conditions: (1) if the product is used as a store display model, (2) if the product is purchased or transported outside of the USA, (3) if any instruction or warning in this manual is not followed, (4) if the product is abused or improperly or abnormally used, (5) if the product is modified to alter functionality or capability without the written permission of iFIT, or (6) if the product is used for commercial or rental purposes. No other warranty beyond that specifically set forth above is authorized by iFIT.

iFIT is not responsible or liable for the following damages: (1) indirect, special, or consequential damages arising out of or in connection with the use or performance of the product; (2) damages with respect to any economic loss, loss of property, loss of revenues or profits, loss of enjoyment or use, or costs of removal or installation; or (3) other consequential damages of any kind. Some states do not allow the exclusion or limitation of incidental or consequential damages. Accordingly, the above limitation may not apply to the customer.

The warranty extended hereunder is in lieu of any and all other warranties, and any implied warranties of merchantability or fitness for a particular purpose are limited in their scope and duration to the terms set forth herein. Some states do not allow limitations on how long an implied warranty lasts. Accordingly, the above limitation may not apply to the customer. This warranty provides specific legal rights; the customer may have other rights that vary from state to state.

For warranty service, please see the front cover of this manual. Please be prepared to provide the model number and serial number of the product (see the front cover of this manual).

iFIT Inc., 1500 S. 1000 W., Logan, UT 84321-9813

Part No. 448466 R1122A

Printed in China © 2022 iFIT Inc.