ARIENS®

HYDRO POWER BRUSH 36

OPERATOR'S MANUAL
MANUEL DU UTILISATEUR

MODEL

926096 – HYDRO POWER BRUSH 36
(SN 000101 +)

MADE IN THE USA WITH GLOBALLY SOURCED PARTS

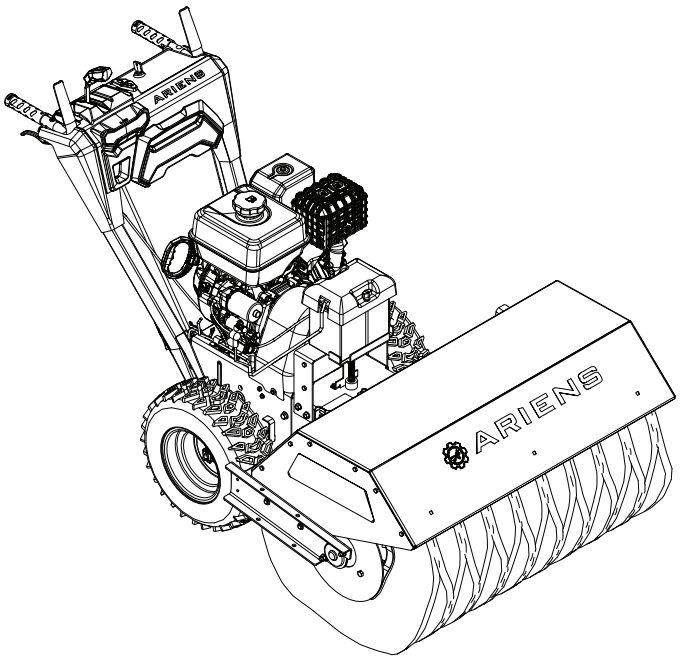

REGISTER YOUR PRODUCT!

E10 E15 E20 E85

EN ENGLISH

FR FRANÇAIS

30299100 • 9/26
PRINTED IN USA

TABLE OF CONTENTS

WELCOME 1
Register Your Product!. 1
SAFETY. 2
Practices & Laws 2
Emission Control System. 2
Required Operator Training 2
Safety Alert Symbol 2
Signal Words 2
Safety Decals. 3
Safety Rules. 4
CONTROLS & FEATURES. 8
Ignition Key 9
Fuel Valve 9
Choke Control Lever 9
Throttle Control Lever 9
Primer Bulb 9
Recoil Starter Handle. 9
Speed Selector Lever 10
Attachment Clutch Lever (Right Side) 10
Traction Drive Clutch Lever (Left Side). 10
Brush Lock Trigger. 10
Dual Handle Interlock. 10
Heated Hand Grip Switch 10
Transmission Bypass Rod 10
Auto-Turn™ Steering. 10
OPERATION 11
Emergency Stopping 11
Before Operating Unit 11
Start The Engine 11
Operate Unit. 11
Stop the Engine 11
Set Brush Height 11
Set Brush Angle. 12
Move Unit Manually 13
Transport Unit 13
Engine Operation Angle. 13
MAINTENANCE 13
Service Position. 13
Return Unit to Operating Position 15
Maintenance Schedule 16
Service Parts 16
Add Fuel Stabilizer. 16
Engine Oil 17
Check Dual Handle Interlock 17
Check Fasteners 17
Check Clutch Operation. 17
Check Tire Pressure 17
Clean Battery. 17
Check Engine Oil. 17
Change Engine Oil. 17
Check Brush Gearcase Oil 17
Lubricate Unit. 17
ADJUSTMENTS 18
Adjust Speed Selector Lever 18
Adjust Attachment Clutch 19
Adjust Traction Drive Clutch 20
TROUBLESHOOTING 22
STORAGE. 24
Short Term. 24
Long Term 24
Start-of-Season Fuel Preparation 24
ACCESSORIES. 24
SPECIFICATIONS. 25
WARRANTY 26

WELCOME

REGISTER YOUR PRODUCT!

It is extremely important to register your product at time of purchase. Product registration activates the warranty and establishes a communication link from AriensCo.

Locate the model and serial number decal on your unit and register those numbers online at www.ariens.com. See Figure 1 for decal location. Be aware that the original selling dealer may have already completed product registration on behalf of the original purchaser.

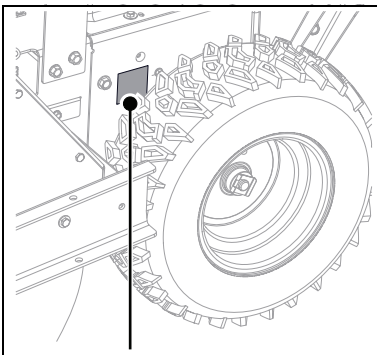

Model & Serial Number Decal

Figure 1

Record model number here.

Record serial number here.

MANUALS

Before operating or servicing the unit, carefully and completely read the manuals provided with the unit. They contain safety instructions and important information about unit controls.

The engine on this unit is covered by a separate manual. Refer to the engine manual for engine service recommendations. Contact the engine manufacturer for a replacement manual if necessary.

Your dealer must review important information in this manual with you before or upon delivery of the unit. It is your responsibility to read and understand all safety precautions and instructions in the manuals. If you do not understand or have difficulty following the instructions, contact your Ariens dealer for assistance. To locate your nearest Ariens dealer, go to www.ariens.com.

A parts manual for your unit is available for free download or purchase at www.ariens.com.

DISCLAIMER

Ariens reserves the right to discontinue, make changes to, and add improvements upon its products at any time without public notice or obligation. The descriptions and specifications contained in this manual were in effect at printing. Equipment described in this manual may be optional. Some illustrations may not be applicable to your unit.

SAFETY

Read these safety rules and follow them closely. Failure to follow these rules could lead to loss of control of unit, severe personal injury or death to you or bystanders, or result in damage to property or the unit.

PRACTICES & LAWS

Practice usual and customary safe working precautions. Learn applicable rules and laws in your area. ALWAYS follow the practices set forth in this manual.

EMISSION CONTROL SYSTEM

This equipment and/or its engine may include exhaust and evaporative emissions control system components required to meet U.S. Environmental Protection Agency (EPA) and/or California Air Resources Board (CARB) regulations. Tampering with emission controls and components by unauthorized personnel may result in severe fines or penalties. Emission controls and components can only be adjusted by an Ariens dealer or an authorized engine manufacturer's service center. Contact your Ariens Equipment Retailer concerning emission controls and component questions.

REQUIRED OPERATOR TRAINING



Read and understand the Operator's Manual and decals on the unit. This information is for your safety and the proper use of your equipment. Failure to follow these instructions and warnings may cause death or serious injury. If you have purchased this product from an Ariens dealer, the dealer can provide you with training.

Familiarize yourself and any other operators with all controls and the safe use of the features of this unit. If you loan, rent or sell this product to others, provide them with all manuals.

If you have any questions, please call our customer support line at 920-756-4688 or contact us at www.ariens.com. Do not use this equipment if, after reading the Operator's Manual and the on-board decals, you have any questions about the safe use of this product.



WARNING: AVOID INJURY. This unit is capable of crushing or amputating body parts. Failure to observe the safety instructions in the manuals and on decals could result in serious injury or death.

ALWAYS stop unit and engine, remove key and allow moving parts to stop before leaving operator's position.

SAFETY ALERT SYMBOL



This is the safety alert symbol. It means:

- **ATTENTION!**
- **YOUR SAFETY IS INVOLVED!**

When you see this symbol:

- **BECOME ALERT!**
- **OBEY THE MESSAGE!**

SIGNAL WORDS

The safety alert symbol above and signal words below are used on decals and in this manual. Read and understand all safety messages.

1. Danger



DANGER: Indicates an IMMINENTLY HAZARDOUS SITUATION! If not avoided, WILL RESULT in death or serious injury.

2. Warning



WARNING: Indicates a POTENTIALLY HAZARDOUS SITUATION! If not avoided, COULD RESULT in death or serious injury.

3. Caution



CAUTION: Indicates a POTENTIALLY HAZARDOUS SITUATION! If not avoided, MAY RESULT in minor or moderate injury. It may also be used to alert against unsafe practices.

4. Notice

NOTICE: Indicates information or procedures that are considered important but not hazard related. If not followed, property damage could result.

5. Important

IMPORTANT: Indicates general reference information worthy of special attention.

SAFETY DECALS

The safety decals on your unit are visual reminders of the important safety information in this manual. All messages on your unit must be fully understood and carefully followed. Safety decals on the unit are explained below.

ALWAYS replace missing or damaged safety decals. Replacement decal information is in the parts manual for your unit. Decals can be ordered from your dealer.

See Figure 2 for safety decal locations.

Safety Decal Locations

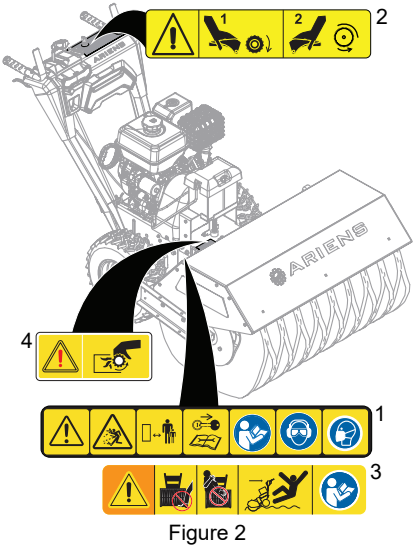

Figure 2

Safety Decal Descriptions

1. WARNING!



WARNING!



NEVER direct discharge towards persons or property that may be injured or damaged by thrown objects.



Keep people away from unit while operating. Keep children out of work area and under watchful care of a responsible adult.



Stop engine, remove key, and read manual before making any repairs or adjustments.



Read operator's manual.



Wear appropriate hearing and eye protection.



Wear a dust particle mask while operating in dusty conditions.

2. CAUTION!



CAUTION!





Be sure to engage the traction drive clutch first. Engaging the attachment clutch before traction drive clutch can cause the unit to travel backwards.

3. DANGER!



DANGER!



Keep clear of brush while engine is running.



NEVER use your hands to clear blockages.



Operating on irregular terrain could cause the brush to dig in and drive the machine rearward.



Read operator's manual.

4. DANGER!



DANGER!



Avoid injury - Stay clear of rotating parts.

SAFETY RULES

The following safety instructions are based on the power brush specifications of the American National Standards Institute and ISO in effect at the time of production.

Training
Read, understand and follow all instructions on the unit and in the manual(s) before operating this unit. Be thoroughly familiar with the controls and the proper use of the equipment. Know how to stop the unit and disengage the controls quickly.
NEVER allow children to operate or play on or near the equipment. NEVER allow adults to operate the equipment without proper instruction.
Keep the area of operation clear of all persons, particularly small children. Be alert and shut off unit if children enter area.
Exercise caution to avoid slipping or falling, especially when operating in reverse.
ALWAYS remove key and/or wire from spark plug before assembly, maintenance or service. Unintentional engine start up can cause death or serious injury.
Complete a walk-around inspection of the unit to understand the unit, your work area and all safety decals.
Understand how to operate all controls, the functions of all controls and how to STOP in an emergency.

Preparation
ALWAYS check overhead and side clearances carefully before operation.
ALWAYS be aware of traffic when operating near streets or along curbs.
Thoroughly inspect the area where the equipment is to be used and remove all doormats, sleds, boards, toys, wires and other foreign objects.
Disengage all clutches and shift into neutral before starting the engine.
Use extension cords and receptacles as specified by the manufacturer for all units with electric drive motors or electric starting motors.

Handle fuel with care; it is highly flammable.

- Use an approved fuel container.
- NEVER add fuel to a running engine or hot engine.
- Fill fuel tank outdoors with extreme care. NEVER fill fuel tank indoors.
- NEVER fill containers inside a vehicle or on a truck or trailer bed with a plastic liner. ALWAYS place containers on the ground, away from your vehicle, before filling.
- When practical, remove gas-powered equipment from the truck or trailer and refuel it on the ground. If this is not possible, then refuel such equipment on a trailer with a portable container, rather than from a gasoline dispenser nozzle.
- Keep the nozzle in contact with the rim of the fuel tank or container opening at all times, until refueling is complete. DO NOT use a nozzle lock-open device.
- Replace gasoline cap securely and wipe up spilled fuel.
- If fuel is spilled on clothing, change clothing immediately.

NEVER attempt to make any adjustments while the engine is running (except when specifically recommended by manufacturer).

ALWAYS allow unit and engine to adjust to outdoor temperature before operating.

Operation

Disengage all controls before starting engine.

Adjust brush height before operating. Engage traction drive clutch before attachment clutch. If brush is set too low or if terrain is irregular, brush can drive machine rearward.

NEVER leave a running unit unattended. ALWAYS stop engine and remove key before leaving unit to prevent unauthorized use.

DO NOT put hands or feet near or under rotating parts. Keep clear of the discharge area at all times.

Moving and/or rotating parts can cut off body parts such as fingers or a hand. NEVER place your hands, other body part or clothing near any moving parts while unit is running.

ALWAYS keep hands away from all pinch points.

DO NOT touch parts which might be hot from operation. Allow parts to cool before attempting to maintain, adjust or service.

Thrown objects can cause injury. Check for weak spots on docks, ramps or floors. Avoid uneven work areas and rough terrain and stay alert for hidden hazards.

Exercise extreme caution when operating on or crossing gravel drives, walks or roads. Stay alert for hidden hazards or traffic.

After striking a foreign object, stop the engine, remove the wire from the spark plug, disconnect the cord on electric motors, thoroughly inspect the unit for any damage, and repair the damage before restarting and operating the unit.

If the unit should start to vibrate abnormally, stop the engine and check immediately for the cause. Vibration is generally a warning of trouble.

Stop the engine whenever you leave the operating position and when making any repairs, adjustments or inspections.

When cleaning, repairing or inspecting the unit, stop the engine and make certain that all moving parts have stopped. Disconnect the spark plug wire and keep the wire away from the plug to prevent someone from accidentally starting the engine.

DO NOT run the engine indoors, except when starting the engine and for transporting the unit in or out of the building. Open the outside doors; exhaust fumes are dangerous.

NEVER operate the unit without proper guards, and other safety protective devices in place and working.

ALWAYS stand clear of the discharge area when operating this unit.

NEVER direct the discharge toward people or areas where injury or property damage can occur from thrown objects. Keep children and others away.

DO NOT overload the unit capacity by attempting to operate at too fast a rate.

NEVER operate the unit at high transport speeds on slippery surfaces. Look behind and use care when operating in reverse.

DO NOT operate in reverse unless absolutely necessary. ALWAYS back up slowly and look down and behind before and while backing.

DO NOT carry passengers.

Disengage attachment when not in use and when traveling from one work area to another.

Disengage power to the attachment when unit is transported or not in use.

Use only attachments and accessories approved by the manufacturer of the unit (such as wheel weights, counterweights or cabs).

This product is equipped with an internal combustion engine. DO NOT use unit on or near any unimproved, forest-covered or brush-covered land unless exhaust system is equipped with a spark arrester meeting applicable local, state or federal laws. A spark arrester, if used, must be maintained in effective working order by operator.

NEVER operate the unit without good visibility or light. ALWAYS be sure of your footing, and keep a firm hold on the handles. Walk; NEVER run.

NEVER operate unit after or during the use of medication, drugs or alcohol. Safe operation requires complete and unimpaired attention at all times.

NEVER allow anyone to operate this unit when their alertness or coordination is impaired.

NEVER touch a hot engine or muffler.

Avoid contact with sharp edges; sharp edges can cut.

Maintenance and Storage

Secure unit so it will not tip over during maintenance.

Before cleaning, removing obstructions or making any inspections, repairs, etc., disengage clutch(es), stop engine, remove key, allow moving parts to stop and hot parts to cool.

Check hardware at frequent intervals for proper tightness to be sure the unit is in safe working condition.

Check clutch and brake operation frequently.

DO NOT change engine governor settings and DO NOT over-speed engine.

Adjust and service as required. Motion of drive wheels and attachment must stop quickly when clutch levers are released.

ALWAYS maintain unit in safe operating condition. Damaged or worn out muffler can cause fire or explosion.

Keep unit free of ice or other debris. Clean up oil or fuel spills.

ALWAYS keep protective structures, guards, and panels in good repair and secured in place. NEVER modify or remove safety devices.

NEVER store the unit with fuel in the fuel tank inside a building where ignition sources are present such as hot water heaters, space heaters or clothes dryers. Close fuel valve and allow the engine to cool completely before storing in any enclosure or covering the unit.

ALWAYS refer to operator's manual for important details if the unit is to be stored for an extended period.

Maintain or replace safety and instruction labels as necessary.

Run the unit a few minutes after removing snow to prevent freeze-up.

Personal Protection

DO NOT operate the equipment without wearing adequate clothing. Avoid loose fitting clothing that can get caught in moving parts. Wear footwear that will improve footing on slippery surfaces.

Wear adequate safety gear, including safety glasses with side shields and protective gloves.

DO NOT wear loose clothing or jewelry, and tie back hair that may get caught in rotating parts.

NEVER attempt to clear obstructions or clean unit while engine is running. Rotating attachments can cause serious injury.

Protect eyes, face and head from objects that may be thrown from unit. Wear appropriate hearing protection.

ALWAYS wear safety glasses or eye shields during operation or while performing an adjustment or repair to protect eyes from foreign objects that may be thrown from the unit.

Slope Operation

Exercise extreme caution when operating on slopes. DO NOT operate on steep slopes. DO NOT operate across the face of slopes; go up and down. Keep all movement on slopes slow and gradual.

Use a slow speed to avoid stops or shifts on slopes. Avoid starting or stopping on a slope. DO NOT park unit on a slope unless absolutely necessary. When parking on a slope ALWAYS block the wheels.

DO NOT operate near drop-offs, ditches, or embankments. Unit can suddenly turn over if a wheel is over the edge of a cliff or ditch, or if an edge caves in.

Fuel

Remove fuel before separating brush attachment from frame. Ensure unit is secure and will not tip during maintenance.

DO NOT run engine in an enclosed area. ALWAYS provide good ventilation. Fumes from engine exhaust can cause injury or death.

Fuel is highly flammable and its vapors are explosive. Handle with care. Use only an approved gasoline container with an appropriately-sized dispensing spout.

No smoking, no sparks, no flames. ALWAYS allow engine to cool before servicing.

NEVER fill fuel tank when engine is running or hot from operation.

NEVER fill or drain fuel tank indoors.

Replace fuel cap securely and clean up spilled fuel.

NEVER fill fuel containers inside a vehicle or on a truck or trailer bed with a plastic liner. ALWAYS place containers on the ground away from your vehicle before filling.

When practical, remove gas-powered equipment from the truck or trailer and refuel it on the ground. If this is not possible, then refuel on a trailer with a portable container, rather than from a gasoline dispenser nozzle.

Keep the nozzle in contact with the rim of the fuel tank or container opening at all times until fueling is complete. DO NOT use a nozzle lock-open device.

If fuel is spilled on clothing, change clothing immediately.

Properly remove fuel before tipping unit to avoid spills.

Towing/Transporting

ALWAYS stop engine, remove key and close fuel valve or drain fuel when transporting unit on a truck or trailer.

Use extra care when loading or unloading unit onto trailer or truck. Secure unit chassis to transport vehicle. NEVER secure from rods or linkages that could be damaged. DO NOT transport unit while engine is running.

Accessories

Use only attachments recommended by AriensCo that are appropriate to your use and can be used safely in your application.

Battery

Avoid electric shock. Objects contacting both battery terminals at the same time may result in injury and unit damage. Do not reverse battery connections.

Explosive gases from battery can cause death or serious injury. Poisonous battery fluid contains sulfuric acid and its contact with skin, eyes or clothing can cause severe chemical burns.

No flames, no sparks and no smoking near battery.

Always wear safety glasses and protective gear near battery.

DO NOT tip battery beyond a 45° angle in any direction.

Always keep batteries out of reach of children.

Battery posts, terminals and related accessories contain lead and lead components, chemicals known to the state of California to cause cancer and reproductive harm. Wash hands after handling.

CONTROLS & FEATURES

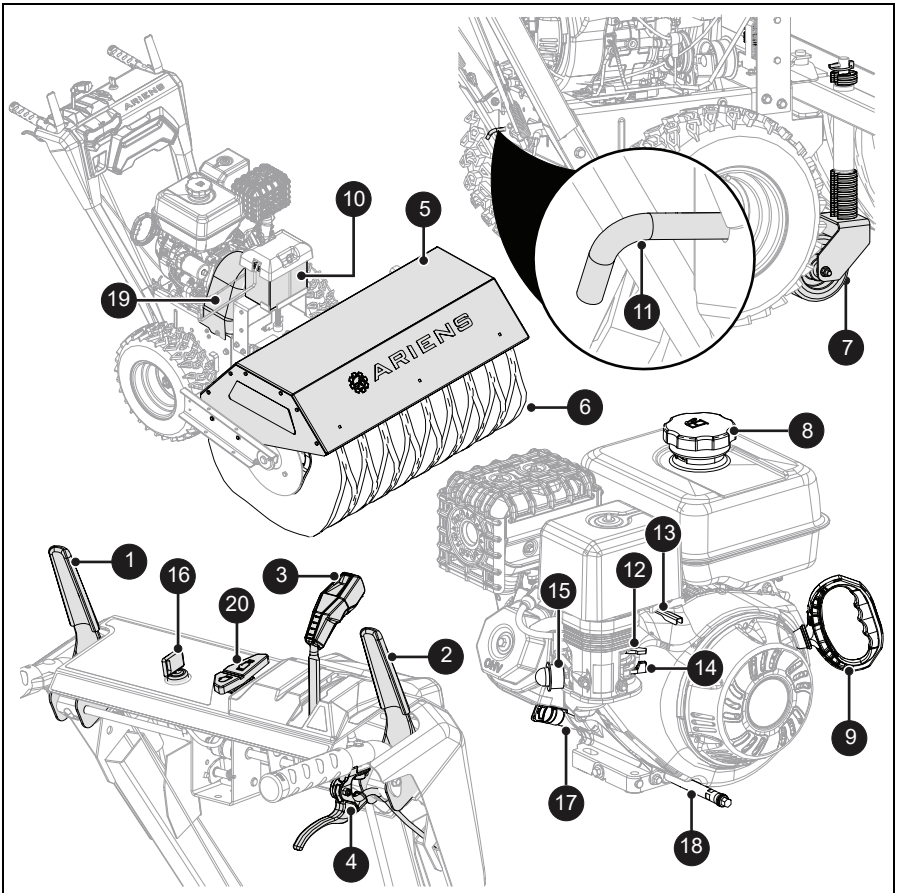

Figure 3

1. Traction Drive Clutch Lever
2. Attachment Clutch Lever
3. Speed Selector Lever
4. Brush Lock Trigger
5. Brush Guard
6. Brush
7. Caster Wheels & Height Adjustment (2)
8. Fuel Tank and Cap
9. Recoil Starter Handle
10. Battery
11. Transmission Bypass Rod
12. Choke Control Lever
13. Throttle Control Lever
14. Fuel Valve
15. Primer Bulb
16. Ignition Key
17. Oil Fill / Dipstick
18. Oil Drain
19. Belt Cover
20. Heated Hand Grip Switch

WARNING: Read and understand the *Safety* section before proceeding.

See Figure 3 for all controls and features locations.

IGNITION KEY

See Figure 4.

Controls power to the engine. The key cannot be removed when in run position.

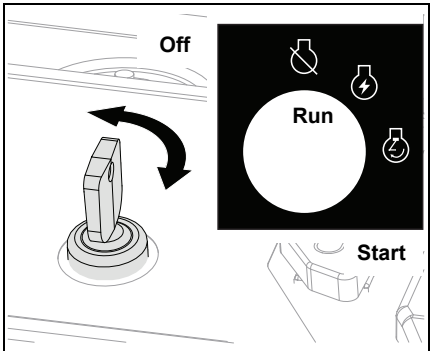

Figure 4

FUEL VALVE

See Figure 5.

Controls fuel flow to the engine.

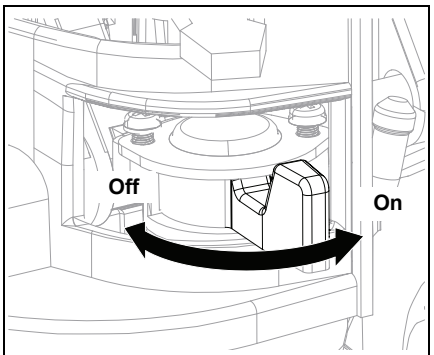

Figure 5

CHOKE CONTROL LEVER

See Figure 6.

Restricts airflow to the engine for easier start on cold engines.

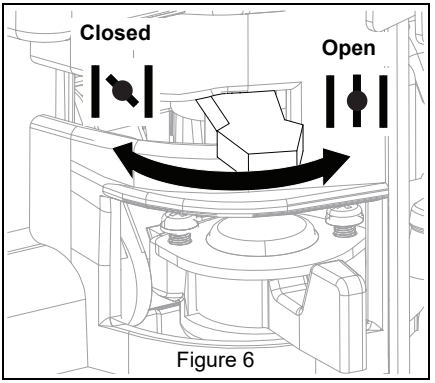

Figure 6

THROTTLE CONTROL LEVER

See Figure 7.

Controls engine speed.

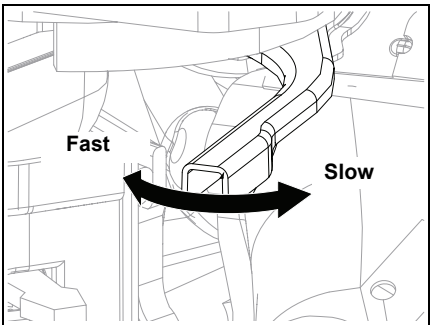

Figure 7

PRIMER BULB

Adds fuel to engine for easier start on cold engines. See *Start The Engine* on page 11.

RECOIL STARTER HANDLE

When pulled, handle will start engine. See *Start The Engine* on page 11.

SPEED SELECTOR LEVER

See Figure 8.

Controls the speed of forward and reverse travel.

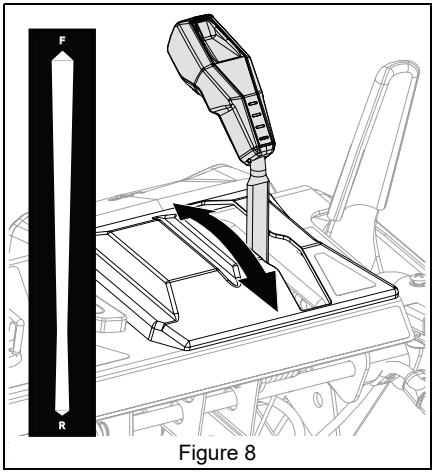

Figure 8

ATTACHMENT CLUTCH LEVER (RIGHT SIDE)

See Figure 9.

Controls brush rotation.

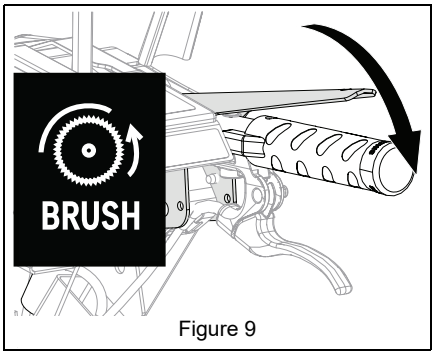

Figure 9

TRACTION DRIVE CLUTCH LEVER (LEFT SIDE)

See Figure 10.

Allows unit to travel forward and in reverse.

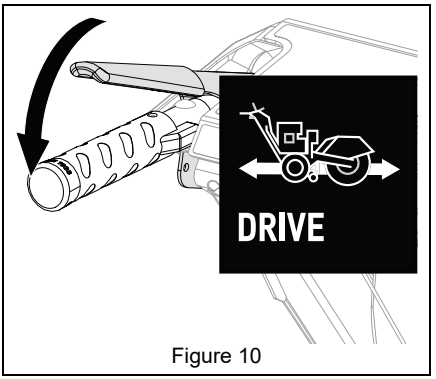

Figure 10

BRUSH LOCK TRIGGER

See Figure 11.

Unlocks and locks brush to change clearing angle.

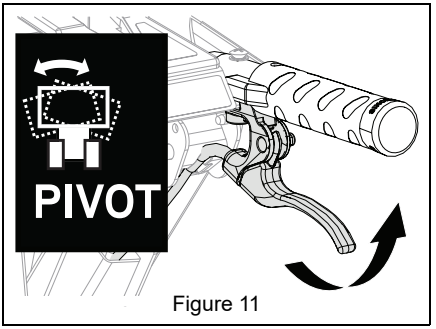

Figure 11

DUAL HANDLE INTERLOCK

Allows brush to rotate without holding attachment clutch lever continuously. Brush continues to turn until both clutch levers are released.

HEATED HAND GRIP SWITCH

Turns the heated hand grips on and off.

TRANSMISSION BYPASS ROD

See *Move Unit Manually* on page 13.

AUTO-TURN™ STEERING

Automatically locks or unlocks wheels to allow unit to turn more precisely.

OPERATION

WARNING: AVOID INJURY. Read and understand the *Safety* section before proceeding.

IMPORTANT: All references to left, right, front or rear are given from the perspective of operator in operator's position, facing the direction of forward travel.

EMERGENCY STOPPING

1. Release both clutch levers.
2. Turn ignition key to off position and remove key.
3. Wait for all moving parts to stop before leaving operator's position.

BEFORE OPERATING UNIT

IMPORTANT: Register your product! See *Register Your Product!* on page 1.

1. Check fuel level and add fuel if needed.

IMPORTANT: Use fresh unleaded fuel with an octane rating of at least 87. DO NOT use E85 blended fuels; the engine is not E20 / E30 / E85 compatible. The maximum recommended ethanol content is 10%. Ariens recommends using a quality fuel stabilizer in all fuel. See *Short Term* on page 24.

2. Check engine oil level and add oil if needed. Refer to engine manual.
3. Check function of controls.
   - Attachment Clutch Lever
   - Traction Drive Clutch Lever
   - Dual Handle Interlock
4. Know how to stop in an emergency. See *Emergency Stopping* on page 11.

START THE ENGINE

1. ***Cold Engines Only:*** Move choke control lever to closed position.
2. Move throttle control lever to fast position.
3. Move fuel valve to on position.
4. ***Cold Engines Only:*** Press primer bulb three times. DO NOT excessively prime the system. Always cover vent hole before primer bulb is pressed. Hold primer in compressed position for one full second each time primer bulb is pressed.
5. Turn ignition key to start position until engine starts, then release key.

NOTICE: DO NOT run starter more than 10 times at intervals of 5 seconds on / 5 seconds off or overheating and damage may occur.

6. ***Recoil Start:*** Pull recoil starter handle.
   a. Grasp handle and pull rope out slowly until it pulls harder.
   b. Pull handle firmly and quickly with a rapid, continuous full-arm stroke. Repeat until engine starts. If engine does not start, see *Troubleshooting* on page 22.
   c. Let handle rewind slowly after engine starts. DO NOT let handle snap against engine.
7. ***Cold Engines Only:*** Gradually move choke control lever to open position after engine starts.

OPERATE UNIT

1. Select desired speed.
2. Engage traction drive clutch.
3. Engage attachment clutch.

NOTICE: Stop brush when traveling between work areas.

NOTICE: When the unit is turned left or right, the Auto-Turn™ differential automatically unlocks wheels for easier turning. On a straight path, the differential locks both wheels in place for best traction.

STOP THE ENGINE

1. Release attachment drive clutch lever.
2. Release traction clutch lever.
3. Move throttle control lever to slow position.
4. Turn ignition key to off position.
5. Remove ignition key.
6. Move fuel valve to off position.

SET BRUSH HEIGHT

CAUTION: AVOID INJURY. If brush height is too low, brush can drive machine rearward when attachment clutch is engaged.

Check Brush Clearing Width

See Figure 12.

1. Move brush to a dusty, flat surface.
2. Start brush at slow speed and run in a stationary position for 30 seconds.
3. Lift brush head and move unit backward.
4. Stop engine. See *Stop the Engine* on page 11.
5. Check width of swept area. Brush pattern should be 5 cm – 7.6 cm (2" – 3") wide along brush length.

- If clearing width is too wide, raise brush.
- If clearing width is too narrow, lower brush.

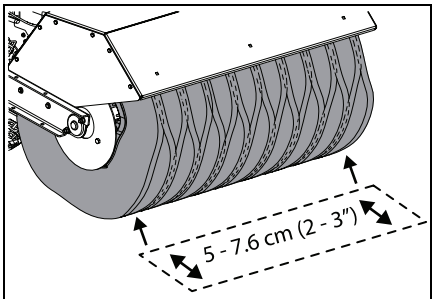

Figure 12

Adjust Brush Height

See Figure 13.

Adjust height so brush rests 3 mm – 6 mm (1/8" – 1/4") above delicate surfaces. For hard surfaces, adjust height so brush lightly touches surface.

IMPORTANT: Spacers on each caster wheel must be adjusted equally.

1. Lower brush:
   a. Remove lynch pins from caster shaft tops and allow shaft to drop enough to access the flats of the shaft.
   b. Turn desired amount of height adjuster clips to be removed so they align with flat side of caster shafts and remove clips.
   c. Install clips onto caster shaft tops. Slide caster shaft up and reinstall lynch pins.
2. Raise brush:
   a. Remove lynch pins from caster shaft tops and allow shaft to drop enough to access the flats of the shaft.
   b. Remove desired amount of height adjuster clips from caster shaft tops and install onto lower caster shaft ends.
   c. Turn height adjuster clips so they DO NOT align with flat side of caster shafts.
   d. Slide caster shaft up and reinstall lynch pins.

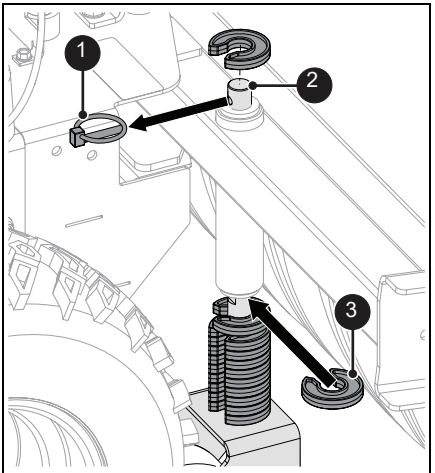

1. Lynch Pin
2. Caster Shaft
3. Height Adjuster Clip

Figure 13

SET BRUSH ANGLE

See Figure 14.

1. Squeeze brush lock trigger to unlock brush position.
2. Move handlebars left or right until brush is in desired position.
3. Release trigger to lock brush position.

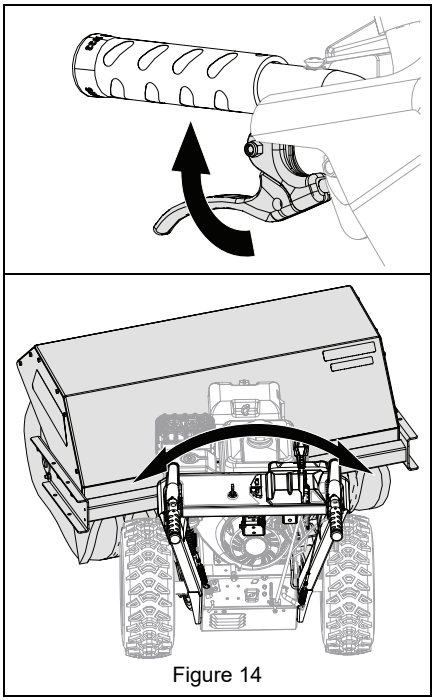

Figure 14

MOVE UNIT MANUALLY

See Figure 15.

- To disengage transmission and move unit with the engine off, pull the bypass rod outward.
- Push the rod in to engage the transmission for normal operation.



Figure 15

TRANSPORT UNIT

1. Stop engine, remove key and move fuel valve to off position.
2. Secure unit chassis to transport vehicle.

NOTICE: NEVER secure from rods or linkages that could be damaged.

ENGINE OPERATION ANGLE

Engine angle during operation can affect how well the engine is lubricated regardless of oil level.

Operating beyond the engine manufacturer's recommended maximum angle will lead to premature engine wear and void the engine warranty. Refer to the engine operator's manual for maximum angle of operation.

MAINTENANCE

WARNING: Read and understand the *Safety* section before proceeding.

Your Ariens dealer can provide service and adjustments to keep your unit operating at peak efficiency. Contact an authorized engine manufacturer's service center for engine service.

SERVICE POSITION

WARNING: AVOID INJURY. Before rotating unit, move fuel valve to off position and drain fuel from tank and fuel system. (Refer to engine manual for instructions.) Make sure unit is secure and will not tip.

IMPORTANT: DO NOT tip unit onto brush. Remove brush attachment if maintenance requires tipping unit forward. Ensure unit is secure and will not tip.

Place Unit in Service Position

1. Move unit to a flat, level surface.
2. Stop engine, remove key and wait for all moving parts to stop and for hot parts to cool.
3. Disconnect spark plug wire.
4. Remove hardware retaining left side of belt cover.
5. Loosen, but DO NOT remove hardware retaining right side of belt cover and remove cover.

See Figure 16.

6. Remove hardware securing belt finger and remove belt finger.
7. Remove attachment drive belts from attachment sheave.

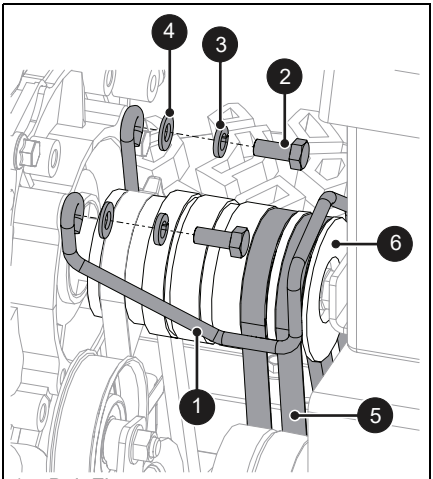

1. Belt Finger
2. Hex Bolt
3. Locking Washer
4. Flat Steel Washer
5. Attachment Drive Belt
6. Attachment Sheave

Figure 16

8. Disconnect brush lock cable from J-clamp on engine mount. See Figure 17.

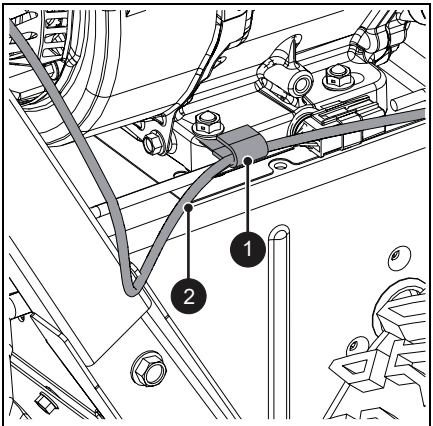

1. J-Clamp
2. Brush Lock Cable

Figure 17

9. Remove hardware securing brush lock trigger to handlebar and allow trigger to rest on brush attachment. See Figure 18.

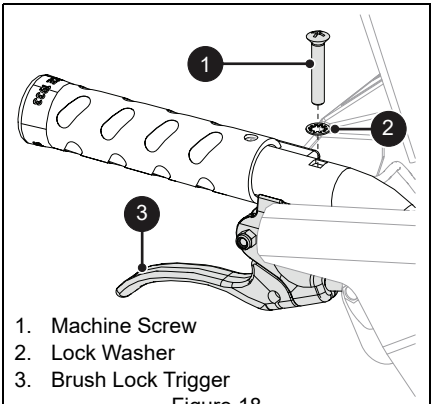

1. Machine Screw
2. Lock Washer
3. Brush Lock Trigger

Figure 18

WARNING: ALWAYS support unit frame and brush attachment when loosening hardware holding them together.

IMPORTANT: Support tractor / frame so it will not tip when disconnected from brush attachment in next step.

See Figure 19.

10. Remove hardware securing brush attachment to tractor / frame.
11. Rotate brush attachment apart from tractor / frame on mount rod and remove from frame.

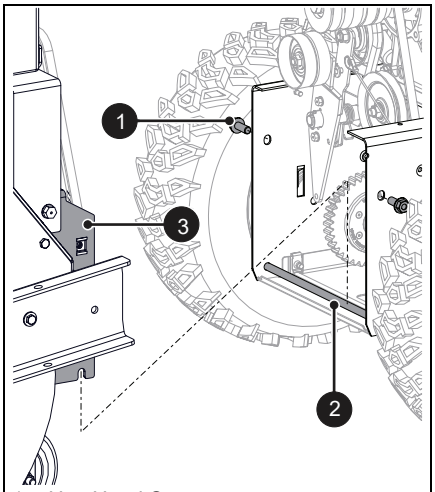

1. Hex Head Screw
2. Mount Rod
3. Mount Bracket

Figure 19

See Figure 20.

CAUTION: AVOID ENGINE DAMAGE. Do not leave unit in service position for longer than 30 minutes. Allow 30 minutes for oil to return to crankcase before starting engine.

12. Slowly rotate tractor / frame forward so unit rests on attachment sheave. Protect attachment sheave so it does not incur damage.
13. Remove hardware securing bottom cover and remove bottom cover.

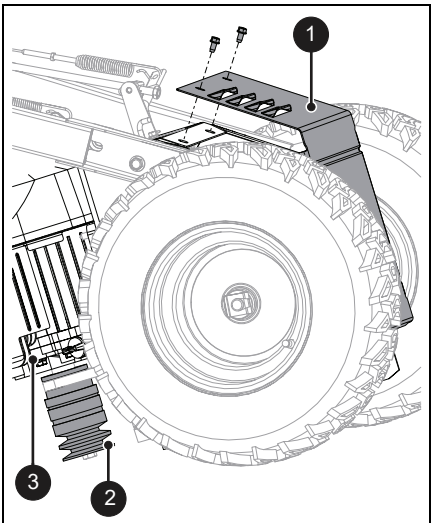

1. Bottom Cover
2. Attachment Sheave
3. Engine

Figure 20

RETURN UNIT TO OPERATING POSITION

1. Reinstall bottom cover and secure with two tapping screws and four hex bolts.
2. Return tractor / frame to operating position and onto a support.
3. Lift brush attachment rear and lower into frame so mount brackets rest on mount rod.
4. Secure brush attachment to frame with two tapping screws, but DO NOT tighten hardware.
5. Reinstall attachment belts onto attachment sheave.
6. Reinstall belt finger and secure with two flat steel washers, two locking washers and two hex bolts. Tighten hardware.
7. Torque hardware installed in step 4 to 36.6 N•m – 47.5 N•m (27 lb-ft – 35 lb-ft).
8. Check belt finger clearance:
   - Engage attachment clutch lever and traction clutch lever and make sure belt finger located opposite belt idler is less than 3.2 mm (1/8") from belts, but not touching the belts. See Figure 21.
   - If needed, adjust clearance by loosening hex bolts, repositioning belt finger, and tightening bolts.

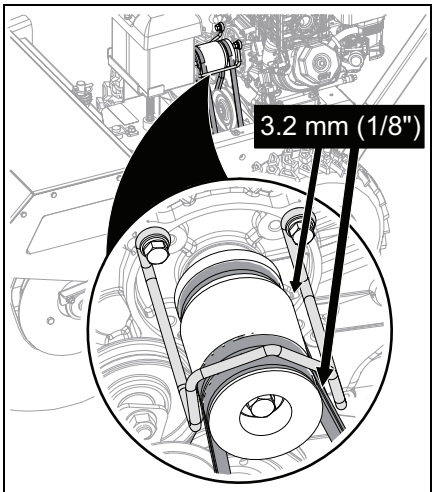

Figure 21

9. Reinstall belt cover and secure with original hardware.
10. Reinstall brush lock trigger onto handlebars and route brush lock cable through J-clamp on engine mount.
11. Adjust attachment clutch. See *Adjust Attachment Clutch* on page 19.

CAUTION: AVOID ENGINE DAMAGE. Allow unit to rest in operating position for 30 minutes before starting engine.

12. Reconnect spark plug wire and fill fuel tank.

IMPORTANT: Check all adjustments after first use.

MAINTENANCE SCHEDULE

Service Performed	Each Use	Every 5 hrs.	Every 25 hrs.	Annually
Add Fuel Stabilizer *	•			
Check Attachment Drive Clutch Operation	•			
Check Traction Drive Clutch Operation	•			
Clean Engine of any Grass and Debris	•			
Check Dual Handle Interlock	•			
Check Fasteners	•			
Check Engine Oil	•			
Check Tire Pressure			•	•
Clean Battery			•	•
Change Engine Oil **				
General Lubrication			•	•

* See *Add Fuel Stabilizer* on page 16.

** Refer to engine manual for instructions.

NOTICE: The transmission is lubricated for life and does not require maintenance or level checking.

SERVICE PARTS

See your Ariens dealer to purchase service parts for your unit.

Description	Part No.
Ariens Hi-Temp Grease	
414 ml (14 oz) cartridge	00036700
Fuel Stabilizer – 118 ml (4 oz.)	04730400
Ariens 5W-30 Engine Oil	
• 473 ml (16 oz.)	00091000
• 946 ml (32 oz.)	00067600
Ariens 0W-30 Synthetic Engine Oil	
• 473 ml (16 oz.)	00077600
• 946 ml (32 oz.)	00077900

ADD FUEL STABILIZER

Add fuel stabilizer to gasoline at time of purchase to help ensure the best performance over the life of that fuel. See *Short Term* on page 24.

ENGINE OIL

Engine is shipped with 5W-30 weight engine oil for operation in cold temperatures. Refer to the engine manual for oil-weight recommendations based on the temperature the unit will be operated.

CHECK DUAL HANDLE INTERLOCK

1. Stop engine.
2. Engage traction clutch and then the attachment drive clutch.
3. Release the attachment clutch lever. The attachment clutch should stay engaged until the traction drive clutch lever is released.

IMPORTANT: If dual handle interlock does not operate correctly, repair as directed in the Service Manual for your unit.

CHECK FASTENERS

Check for loose or missing hardware.

CHECK CLUTCH OPERATION

- Brush must stop quickly when attachment clutch lever is released.
- Wheels must stop quickly when traction drive clutch lever is released.

IMPORTANT: If clutches do not engage or disengage correctly, see Adjust Attachment Clutch on page 19 or See Adjust Traction Drive Clutch on page 21. Refer to the Service Manual for your unit for more information about clutch repairs.

CHECK TIRE PRESSURE

Keep tires inflated to pressure listed on tire sidewall.



WARNING: AVOID INJURY. Explosive separation of tire and rim parts is possible.

- DO NOT inflate tires above the recommended pressure.
- DO NOT inflate tires with a compressor; use a hand pump.
- DO NOT stand in front of tire assembly when inflating. Use a clip-on chuck and extension hose long enough to allow you to stand to one side.
- DO NOT mount a tire without proper equipment and experience.

CLEAN BATTERY

1. Remove battery.
2. Remove corrosion from battery terminals and cable connections with a wire brush, then wash with a weak baking soda solution.
3. Apply a thin coat of grease or petroleum jelly to terminals and cable ends.
4. Reinstall battery.

CHECK ENGINE OIL

NOTICE: Engine oil level must be maintained at correct level or engine damage may occur. Refer to engine manual.

CHANGE ENGINE OIL

Refer to engine manual.

CHECK BRUSH GEARCASE OIL

Checking gearcase oil level requires draining gearcase oil and refilling with recommended oil and amount. Refer to the Service Manual for your unit for procedures, type and quantity.

LUBRICATE UNIT

IMPORTANT: Wipe fittings, pivot points, and pin connections clean before and after lubrication.

Grease: Ariens recommends using Ariens Hi-Temp Grease or equivalent (see *Service Parts* on page 16) to lubricate fittings. Lubricate each season or every 25 hours of operation.

Oil: Apply oil to all pivot points and pin connections.

Use the following key for all lubrication procedures.

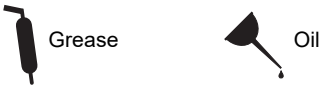

Casters

See Figure 22.

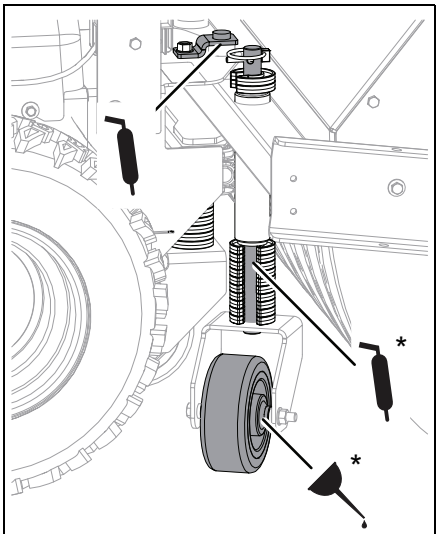

Figure 22

Traction Drive

1. Place unit in service position. See *Service Position* on page 13.
2. Lubricate as shown in Figure 23 and Figure 24.

IMPORTANT: DO NOT allow grease or oil to contact belts.

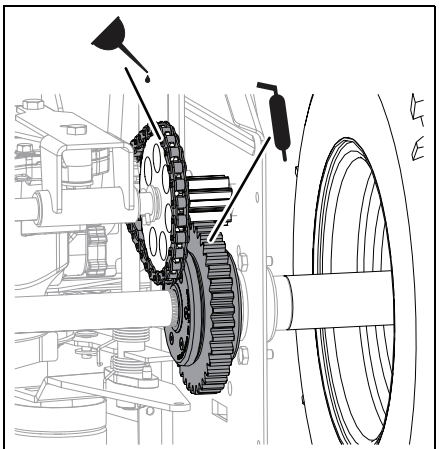

Figure 23

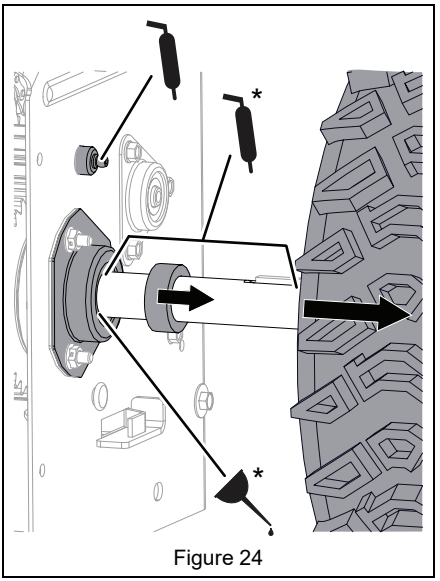

Figure 24

3. Return unit to operating position. See *Return Unit to Operating Position* on page 15.

ADJUSTMENTS

WARNING: Read and understand the *Safety* section before proceeding.

ADJUST SPEED SELECTOR LEVER

See Figure 25.

1. Stop engine, remove key and wait for all moving parts to stop and for hot parts to cool.
2. Place unit on blocks with wheels off the ground.
3. Remove hairpin from trunnion and remove trunnion from bell crank.
4. Loosen jam nut on shift rod and thread nut upward.
5. Start the engine and engage the traction drive clutch
6. Move the bell crank to the position at which the wheels stop moving and then stop the engine.
7. Move the speed selector lever to neutral position and hold lever in place.

8. Without moving the bell crank, thread trunnion up or down the shift rod to align with bell crank hole.
9. Insert trunnion in bell crank.
10. Reinstall hairpin in trunnion.
11. Tighten jam nut against trunnion.
12. Check neutral setting.
    a. Start unit, ensure speed selector is in neutral position and engage traction drive clutch. Wheels should not move.
    b. Stop unit. If wheels move, repeat adjustments.
13. Lower unit to ground.

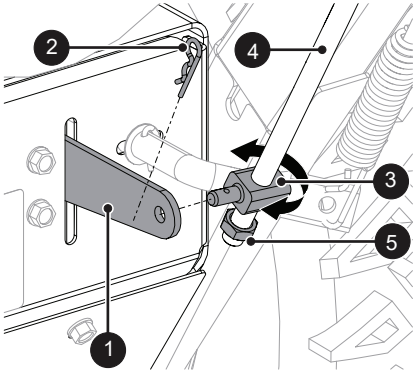

1. Bell Crank
2. Hairpin
3. Trunnion
4. Shift Rod
5. Jam Nut

Figure 25

ADJUST ATTACHMENT CLUTCH

WARNING: AVOID INJURY. Improper adjustment could result in unexpected movement of brush causing death or serious injury. Brush MUST STOP within 5 seconds when attachment clutch lever is released.

Remove Slack from Attachment Cable

1. Stop engine, remove key and wait for all moving parts to stop and for hot parts to cool.
2. Disconnect spark plug wire.
3. Remove hardware retaining left side of belt cover.
4. Loosen, but DO NOT remove hardware retaining right side of belt cover and remove cover.
5. Loosen jam nut on cable adjustment barrel, and then turn the adjustment barrel down to shorten cable and remove cable slack. See Figure 26.

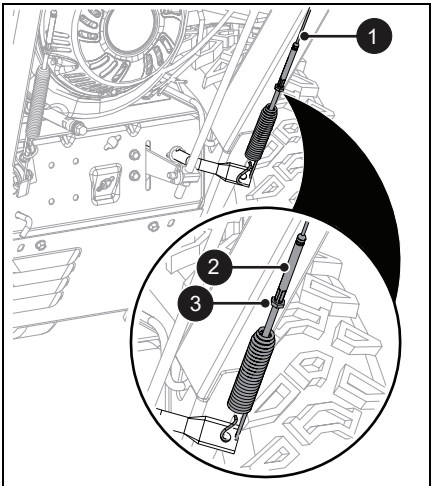

1. Attachment Clutch Cable
2. Cable Adjustment Barrel
3. Jam Nut

Figure 26

4. With the attachment clutch disengaged, check that the attachment idler arm lightly touches the frame. See Figure 27.

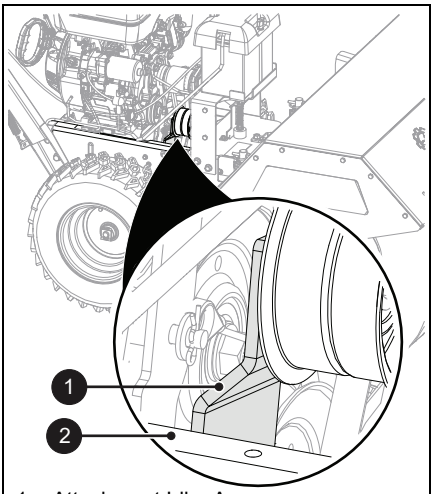

1. Attachment Idler Arm
2. Frame

Figure 27

3. Tighten jam nut on cable adjustment barrel.
4. Reinstall belt cover and secure with original hardware.
5. Reconnect spark plug wire.

Check Attachment Idler Arm Clearance

See Figure 28.

1. Place unit in service position and remove bottom cover. See *Service Position* on page 13.
2. Engage attachment clutch and check the clearance between frame and center of hole on attachment idler arm. Center of hole should be 22.2 mm – 31.8 mm (7/8" – 1 1/4") from frame.

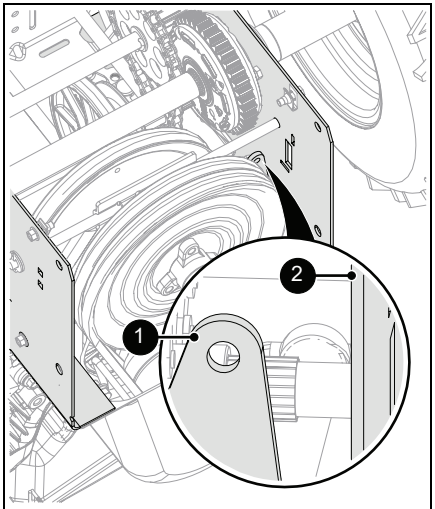

1. Attachment Idler Arm
2. Frame

Figure 28

   - If center of hole is 22.2 mm – 31.8 mm (7/8" – 1 1/4") from frame, no further adjustment is required.
   - If center of hole is less than 22.2 mm (7/8") from frame, loosen idler adjustment nut and move idler closer to belt. Tighten adjustment nut and recheck clearance.
   - If center of hole is more than 31.8 mm (1 1/4") from frame, loosen idler adjustment nut and move idler away from belt. Tighten adjustment nut and recheck clearance.
3. Return unit to operating position. See *Return Unit to Operating Position* on page 15.

Check Belt Finger Clearance

See Figure 29.

With the attachment clutch and traction clutch engaged, the belt finger located opposite the belt idler must be less than 3.2 mm (1/8") from belts, but must not touch the belts.

To adjust belt finger:

1. Remove hardware retaining left side of belt cover.
2. Loosen, but DO NOT remove hardware retaining right side of belt cover and remove cover.
3. Loosen bolts and move belt finger to correct position.
4. Tighten bolts and recheck belt finger clearance.
5. Reinstall belt cover and secure with original hardware.

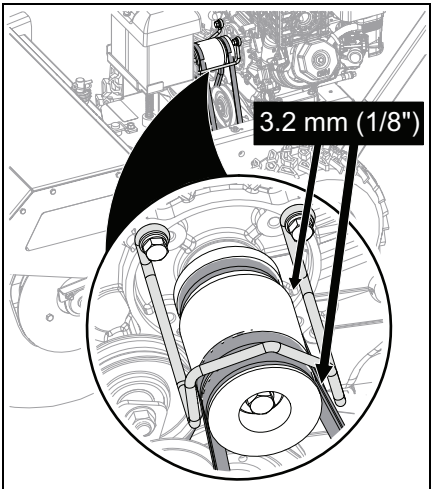

Figure 29

ADJUST TRACTION DRIVE CLUTCH

See Figure 30.

1. Stop engine, remove key and wait for all moving parts to stop and for hot parts to cool.
2. Disconnect spark plug wire.
3. Remove hardware retaining left side of belt cover.
4. Loosen, but DO NOT remove hardware retaining right side of belt cover and remove cover.
5. Loosen jam nut on traction cable adjustment barrel, and then turn adjustment barrel down to shorten cable and remove cable slack.

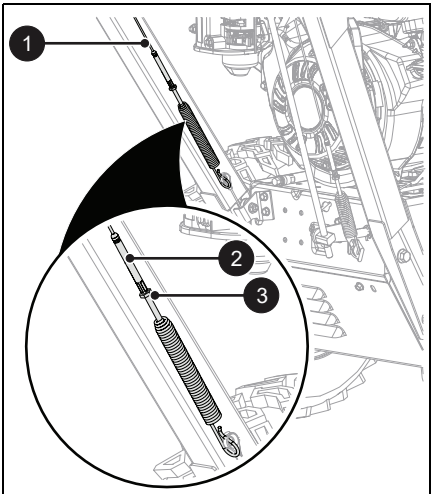

1. Traction Drive Clutch Cable
2. Cable Adjustment Barrel
3. Jam Nut

Figure 30

6. With the traction clutch disengaged, make sure idler arm lightly touches the frame. See Figure 31.

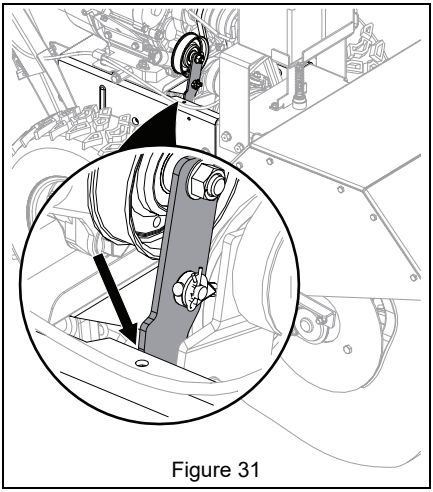

Figure 31

7. Tighten jam nut on cable adjustment barrel. See Figure 30.
8. Reinstall belt cover and secure with original hardware.
9. Reconnect spark plug wire.

TROUBLESHOOTING

Problem	Probable Cause	Correction
Engine will not start.	Ignition key is in off position.	Turn ignition key to run position. See *Ignition Key* on page 9.
	Choke is closed.	If engine is warm, move choke control lever to open position. DO NOT choke a warm engine. See *Choke Control Lever* on page 9.
	Fuel valve is in off position.	Move fuel valve to on position. See *Fuel Valve* on page 9.
	Fuel tank is empty.	Fill tank with fuel. See *Before Operating Unit* on page 11.
	Ignition switch starter circuit is not functioning. (Electric Start)	See your Ariens dealer.
	Build up of dirt and residue around governor / carburetor.	Clean area around governor / carburetor. See your Ariens dealer.
	Spark plug wire is disconnected.	Connect spark plug. Refer to engine manual.
	Spark plug is faulty.	Replace spark plug. Refer to engine manual.
	Excessive fuel in engine cylinder (flooded).	Move choke control lever to open position and reattempt starting. See *Start The Engine* on page 11.
	Battery is not charged or is faulty.	Charge or replace battery.
	Engine will not crank / start.	See your Ariens dealer or authorized engine manufacturer's service center.
	Engine is faulty.	See your Ariens dealer or authorized engine manufacturer's service center.
Engine starts hard or runs poorly.	Fuel mixture is too rich.	Move choke control lever to open position. See *Choke Control Lever* on page 9.
	Spark plug is faulty, fouled or incorrectly gapped.	Clean and correctly set spark plug gap (refer to engine manual) or see your Ariens dealer.
	Fuel cap vent is blocked.	Install new fuel cap.
Engine stops.	Fuel tank is empty.	Fill tank with fuel. See *Before Operating Unit* on page 11.
	Fuel valve is in the off position.	Move fuel valve to on position. See *Fuel Valve* on page 9.
	Obstruction in brush.	Stop engine, remove key and wait for all moving parts to stop and for hot parts to cool. Remove obstruction before restarting.
	Contaminated fuel supply.	Replace with clean fuel.
	Spark plug is faulty.	Replace or clean spark plug. Refer to engine manual.
	Fuel cap vent is blocked.	Install new fuel cap.

TROUBLESHOOTING

Problem	Probable Cause	Correction
Unit does not drive forward or in reverse.	Traction drive cable is not adjusted correctly.	Remove slack from cable. See *Adjust Traction Drive Clutch* on page 20.
	Traction belt is not functioning.	Repair or replace traction drive belt. Refer to the Service Manual for your unit.
	Speed selector is not adjusted correctly.	Adjust speed selector. See *Adjust Speed Selector Lever* on page 18.
	Transmission is bypassed.	Push the bypass rod in to engage the transmission for normal operation. See *Move Unit Manually* on page 13.
Unit sweeps poorly.	Attachment clutch not adjusted properly.	Adjust attachment clutch. See *Adjust Attachment Clutch* on page 19.
	Debris is caught in brush.	Stop engine, remove key and wait for all moving parts to stop and for hot parts to cool. Remove obstruction before restarting.
	Attachment drive belt is slipping, worn or damaged.	Adjust or replace attachment drive belt. Refer to the Service Manual for your unit.
	Attachment drive belt is loose or damaged.	Replace belt or adjust attachment control cable. See *Adjust Attachment Clutch* on page 19. Refer to the Service Manual for your unit.
Belt squeals continuously.	Attachment clutch needs adjustment.	See *Adjust Attachment Clutch* on page 19.
U-joint is noisy.	Worn U-joint.	Replace worn parts. Refer to the Service Manual for your unit.
Caster wheels do not pivot as designed.	Debris in casters.	Clean debris from casters.
	Excessive friction in casters.	Lubricate casters. See *Lubricate Unit* on page 17.

STORAGE

WARNING: Read and understand the *Safety* section before proceeding.

SHORT TERM

1. Tighten all hardware to correct specifications.
2. Inspect unit for visible signs of wear or damage. Repair as needed.
3. Apply a light layer of oil or anti-rust compound on bare metal areas.
4. Prepare fuel system for storage.

NOTICE: Ariens recommends using a quality fuel stabilizer in all fuel. Gasoline left in the fuel system without a stabilizer, even for short periods of time, deteriorates and leaves gummy deposits in the system that may damage the carburetor and fuel hoses, filter and tank. For the best effectiveness, add stabilizer to all fuel containers whenever purchasing fuel. Add the stabilizer to the container before adding fuel.

   a. Add Ariens fuel stabilizer (see *Service Parts* on page 16) or equivalent according to manufacturer's instructions to the fuel tank and any fuel containers with remaining fuel.
   b. Run engine outdoors for at least 5 minutes to allow stabilizer to reach the carburetor.

5. Move fuel valve to off position and allow engine to stop on its own.
6. Turn ignition key to off position and remove key.
7. Store unit in a cool, dry, protected area. Do not store unit outdoors.

LONG TERM

1. Perform all short-term storage items.
2. Clean unit thoroughly with mild soap and low-pressure water.

IMPORTANT: Never spray unit with high-pressure water.

3. Lubricate as directed in *Maintenance* on page 13.
4. Touch up all scratched painted surfaces.
5. Remove weight from wheels by putting blocks under frame or axle.
6. Store unit in a cool, dry, protected area. Do not store unit outdoors.

START-OF-SEASON FUEL PREPARATION

Before opening the fuel valve for the first time after long-term storage, add fresh, stabilizer-treated fuel to the fuel tank and any fuel containers with remaining fuel.

ACCESSORIES

See your Ariens dealer for a complete list of compatible accessories and attachments for your unit.

IMPORTANT: Front Caster Mount Kit (Ariens P/N 72602700) is required for dethatching.

Description	Part No.
Snow Cab	72103300
Tire Chain Set	72601800
Wire Bristle Kit	72602200
Deflector Kit	72602300
Brush Replacement Kit	72602600
Front Caster Mount Kit	72602700

SPECIFICATIONS	
Model Number	**926096**
Engine	
Engine Model	Ariens AX301
Gross Torque* – N•m (lb-ft)	19.9 (14.7)
Displacement – cm^3 (in^3)	301 (18.4)
Maximum RPM – No Load	3600 ± 100
Starter	12V Electric and Recoil
Fuel	Refer to Engine Manual
Tank Capacity – L (qt)	5.2 (5.5)
Brush	
Clearing Width – cm (in)	91.4 (36)
Brush Diameter – cm (in)	63.5 (25)
Brush Rotation Speed – RPM	200
Angle	40° Total (20° left / right)
Drive	
Drive	Hydrostatic
Drive Speeds	Infinitely Variable
Pneumatic Tires – in	16 x 6.50-8
Axle Control	Auto-Turn™
Size	
Length – cm (in)	183 (72)
Height – cm (in)	109.2 (43)
Width – cm (in)	111.8 (44)
Weight – kg (lb)	181 (399)

*Engine output stated in gross torque per SAE J1940 as rated by engine manufacturer.

Outdoor Power Equipment Limited Warranty

AriensCo warrants to the **original purchaser** that Ariens® brand products purchased on or after 09/01/2026 will be free from defects in material and workmanship for the time period noted in the chart below. Equipment put to personal use around a single household or residence is considered “Residential Use.” Equipment put to any business use (agricultural, commercial, or industrial) or used at multiple locations is considered “Commercial Use.” If any product is rented or leased, then the duration of these warranties shall be 90 days after the date of purchase.

An authorized Ariens dealer will repair any defect in material or workmanship, and repair or replace any defective part, subject to the conditions, limitations and exclusions set forth herein. Such repair or replacement will be free of charge (labor and parts) to the original purchaser; except as noted below. Pick-up and delivery are at the owner’s expense.

Warranty coverage between models in the same product family can vary.
Refer to the warranty code printed on your unit’s model and serial number decal for your unit’s warranty coverage, not the product family designation. Refer to the Operator’s Manual for your unit’s model and serial number decal location.

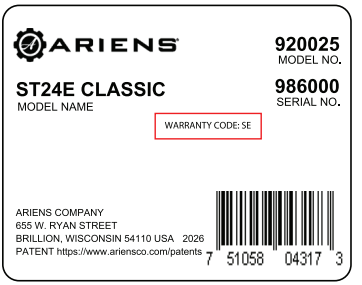

Warranty Code	Product Family	Warranty Period
AA	Serialized Attachments	1 Year.
CH, CQ	ZENITH	4 Years or 750 Hours.*
CL	ARROW	5 Years or 1000 Hours.* No Hour Limit for First 2 Years.
HD	RAZOR	3 Years Residential Use. 90 Days Commercial Use.
HE	EDGE	2 Years or 150 Hours.*
HF	IKON	3 Years or 300 Hours.*
HG	RIDGELINE®	4 Years or 400 Hours.*
HH	APEX®, APEX ELITE	4 Years or 500 Hours.*
HI	RAZOR	4 Years Residential Use. 90 Days Commercial Use.
HJ	EDGE LT, 20" Push Mower, 21" 3-in-1 Push Mower	2 Years Residential Use. No Commercial Warranty.
PA	921-Series Brushes	3 Years Residential Use. 90 Days Commercial Use.
PB	926-Series Brushes	3 Years Residential Use. 1 Year Commercial Use.
SA	Professional Sno-Thro®	3 Years Residential Use. 1 Year Commercial Use.
SB	Compact, Deluxe and Platinum Sno-Thro and Path-Pro	3 Years Residential Use. 90 Days Commercial Use.
SC	S18	2 Years Residential Use. 90 Days Commercial Use.
SD	Deluxe and Platinum EFI Sno-Thro	3 Years Residential Use. 90 Days Commercial Use.
SE	920-Series Classic Sno-Thro	3 Years Residential Use. 90 Days Commercial Use.
SF	MAMMOTH® Tractor	2 Years or 500 Hours.*

* Whichever comes first.

Special Extensions

The chart below details special **extensions** to warranty terms. Warranty terms are total time periods covered. If any product is rented or leased, there are no extensions to the 90-day warranty.

Warranty Code	Warranty Term Extension	Warranty Period	Detail
SA	Cast Iron Auger Gear Case	5 Years.	Warranty is for parts only after the initial warranty period. Components are covered for manufacturer's defect only, not wear.
SB, SD	Cast Iron Auger Gear Case	5 Years Residential Use. 1 Year Commercial Use.	
CL	Mower Deck Shell and Main Frame	Lifetime Limited.	

Exclusions and Limitations

The charts below detail special **exclusions and limitations** to this warranty.

Warranty Term Exclusions	Warranty Period
Including, but not limited to air filters, brake arms, brake linings, brake shoes, brushes, cutters, fuel filters, halogen headlights, halogen light bulbs, lubricants, mower blades, flail blades, oil, oil filters, spark plugs, scraper blades, shear bolts, skid shoes and spoon tines.	Components are not covered under warranty.

Warranty Term Limitations	Warranty Period
Battery	Battery warranty is one year. Units used for rental or lease have no exceptions to the 90-day warranty. Total battery claim reimbursement will not exceed $65.00 USD.
Belts and Tires	180 days or 250 hours (whichever comes first).
Cloth, Plastic, and Rubber Components. Mufflers.	Components are covered for manufacturer's defect only, not wear.
Parker Actuators	1 Year.

Exclusions – Items Not Covered by This Warranty

- Non-genuine Ariens service parts are not covered by this warranty and may void the warranty if their use results in premature wear or damage to the product.
- Damages resulting from the installation or use of any part, accessory, or attachment which is not approved by AriensCo for use with product(s) identified herein are not covered by this warranty.
- Any misuse, alteration, improper assembly, improper adjustment, neglect, or accident which requires repair is not covered by this warranty.
- Repairs or adjustments required due to failure to use fresh fuel or failure to properly prepare the unit for periods of non-use.
- **Use of gasoline blends exceeding 10% ethanol voids any and all warranties.**
- **Any tampering with the hour meter voids any and all warranties.**
- Products are designed to the specifications in the area that the product was originally distributed. Different areas may have significantly different legal and design requirements. This warranty is limited to the requirements in the area in which the unit was originally distributed. AriensCo does not warrant this product to the requirements of any other area. Warranty service is limited to service within the area originally distributed.
- In countries other than the United States and Canada, contact the AriensCo dealer for warranty policies that govern within your country. Rights may vary from country to country and within any one country.

Evaporative Emissions Control Warranty Exception

As required by the California Air Resources Board (CARB) and the US Environmental Protection Agency (EPA) the evaporative emissions control system is warranted to the ultimate purchaser, and any subsequent owner, for two years.

The CARB and EPA evaporative emissions control system warranty is described in a separate evaporative emission control warranty statement.

Transmissions

The chart below details transmission warranty information. Transmission warranty terms may vary from the specific terms of this warranty. If inconsistent, the terms of the transmission warranty shall apply to the transmission and its component parts.

Transmission Manufacturer	Detail
Hydro-Gear Transaxle	See Hydro-Gear warranty. The warranty is administrated by AriensCo. Refer to www.ariens.com for warranty statement.
Parker Hannifin Drive & Valve Systems	Parker Transaxles, Pumps, Wheel Motors and Valves* are warranted for the length of equipment warranty period. Refer to Warranty Code chart above. Warranty is administered by AriensCo.

* Parker Actuators see Limitations chart above.

Engines

Engine warranty terms may vary from the specific terms of this warranty. If inconsistent, the terms of the engine warranty shall apply to the engine and its component parts. Engines are covered by the engine manufacturer's warranty. Refer to the engine manufacturer's warranty statements.

Engine Manufacturer	Detail
Ariens AX	Ariens-branded engines are warranted by the manufacturer and the warranty is administrated by AriensCo. Refer to the engine manual or www.ariens.com for warranty statements.
Briggs & Stratton, Kawasaki, Kohler	Covered by the engine manufacturer's warranty. Refer to the engine manufacturer's warranty statements.

Parts and Accessories

Service replacement parts and non-serialized accessories are warranted for 90 days from date of purchase. Labor is not included.

Customer Responsibilities

Register the product immediately at the time of sale. If the dealer does not register the product, the customer must register the unit on-line at www.ariens.com. Customer is required to present proof of purchase to validate unit is within its warranty period.

To obtain warranty service, the **original purchaser** must:

- Complete maintenance and adjustments explained in the Operator's Manual.
- Promptly notify AriensCo or an authorized Ariens service representative of the need for warranty service.
- Transport the product to and from the place of warranty service at owner's expense.
- Have the warranty service performed by an authorized Ariens service representative.

To find an authorized dealer use the dealer locator on our websites, or contact us by mail or phone.

Globally (Except Australia or New Zealand):	Australia:	New Zealand:
AriensCo 655 W. Ryan Street Brillion, WI 54110 Phone: (920) 756 - 4688 www.ariens.com	Roy Gripske & Sons Pty Ltd 11 Sodium Street Narangba Queensland 4504 Australia Phone: (61130) 036 3004 www.rgs.com.au	Masport Ltd 320 Ti Rakau Drive East Tamaki Auckland 2013 New Zealand Phone: 0800 627 7678 www.masport.co.nz

Disclaimer

AriensCo may from time to time change the design of its products. Nothing contained in this warranty shall be construed as obligating the AriensCo to incorporate such design changes into previously manufactured products, nor shall such changes be construed as an admission that previous designs were defective.

Limitation of Remedy and Damages

AriensCo liability under this warranty, and under any implied warranty that may exist, is limited to repair of any defect in workmanship, and repair or replacement of any defective part. AriensCo shall not be liable for incidental, special, or consequential damages (including lost profits). Some states do not allow the exclusion of incidental or consequential damages, so the above limitation or exclusion may not apply to you.

AriensCo shall not be held liable for damages, including premature wear and tear, or injuries caused by installation of unauthorized parts and accessories or for parts and accessories not installed by an authorized Ariens dealer.

Australian Consumer Law

The following applies solely to warranties subject to Subsection 102(1) of the Australian Consumer Law: Our goods come with guarantees that cannot be excluded by the Australian Consumer Law. You are entitled to a replacement or refund for a major failure and for compensation for any other reasonably foreseeable loss or damage. You are also entitled to have the goods repaired or replaced if the goods fail to be of acceptable quality and failure does not amount to a major failure.

Disclaimer of Further Warranty

AriensCo makes no warranty, express or implied, other than what is expressly made in this warranty. If the law of your state provides that an implied warranty of merchantability, or an implied warranty of fitness for particular purpose, or any other implied warranty, applies to AriensCo, then any such implied warranty is limited to the duration of this warranty. Some states do not allow limitations on how long an implied warranty lasts, so the above limitation may not apply to you.

This warranty gives you specific legal rights, and you may also have other rights which vary from region to region.

ARIENS®

655 WEST RYAN ST.
BRILLION, WI 54110

WWW.ARIENS.COM

SEE PARTS, ACCESSORIES, AND ATTACHMENTS FOR YOUR UNIT AT PARTS.ARIENS.COM.

A PARTS MANUAL FOR YOUR UNIT IS AVAILABLE FOR FREE DOWNLOAD OR PURCHASE AT ARIENS.COM.

WARNING: Cancer and Reproductive Harm - www.P65Warnings.ca.gov

ARIENS|CO