INSTALLATION INSTRUCTIONS AND OWNER'S MANUAL

Side by Side Refrigerator

Do Not Throw Away - Additional important safety information included.
Para las instrucciones en español, visite nuestro sitio de internet.

INSTRUCTIONS D'INSTALLATION ET MANUEL D'UTILISATION

Réfrigérateur côte à côte

Ne pas jeter — Autres consignes de sécurité importantes ci-jointes.

Table of Contents/Table des matières

REFRIGERATOR SAFETY....2
INSTALLATION INSTRUCTIONS....3
Unpack the Refrigerator....3
Door Removal, Leveling, and Alignment....4
Handle Installation and Removal....6
Location Requirements....7
Electrical Requirement....7
Water Supply Requirements....7
Connect Water Supply....8
REFRIGERATOR CARE....10
Cleaning....10
Lights....11
Vacation and Moving Care....11
TROUBLESHOOTING....12
PERFORMANCE DATA SHEET....17
SÉCURITÉ DU RÉFRIGÉRATEUR....18
INSTRUCTIONS D'INSTALLATION....19
Déballage du réfrigérateur....19
Retrait, réglage de l'aplomb et alignement des portes....20
Installation et dèmontage des poignèes....22
Exigences d'emplacement....23
Spécifications électriques....23
Spécifications de l'alimentation en eau....23
Raccordement de la canalisation d'eau....24
ENTRETIEN DU RÉFRIGÉRATEUR....26
Nettoyage....26
Lampes....27
Entretien avant les vacances ou lors d'un déménagement....27
DÉPANNAGE....28
FEUILLE DE DONNÉES SUR LA PERFORMANCE....34

W11105301A

REFRIGERATOR SAFETY

Your safety and the safety of others are very important.

We have provided many important safety messages in this manual and on your appliance. Always read and obey all safety messages.

This is the safety alert symbol.

This symbol alerts you to potential hazards that can kill or hurt you and others.

All safety messages will follow the safety alert symbol and either the word “DANGER” or “WARNING.” These words mean:

⚠ DANGER — **You can be killed or seriously injured if you don't immediately follow instructions.**

⚠ WARNING — **You can be killed or seriously injured if you don't follow instructions.**

All safety messages will tell you what the potential hazard is, tell you how to reduce the chance of injury, and tell you what can happen if the instructions are not followed.

IMPORTANT SAFETY INSTRUCTIONS

WARNING: To reduce the risk of fire, electric shock, or injury when using your refrigerator, follow these basic precautions:

- Plug into a grounded 3 prong outlet.
- Do not remove ground prong.
- Do not use an adapter.
- Do not use an extension cord.
- Disconnect power before servicing.
- Replace all parts and panels before operating.
- Remove doors from your old refrigerator.
- Connect to a potable water supply only.
- Use nonflammable cleaner.
- Keep flammable materials and vapors, such as gasoline, away from refrigerator.
- Use two or more people to move and install refrigerator.
- Disconnect power before installing ice maker (on ice maker kit ready models only).
- Use a sturdy glass when dispensing ice (on some models).
- Do not hit the refrigerator glass doors (on some models).
- This appliance is not intended for use by persons (including children) with reduced physical, sensory or mental capabilities, or lack of experience and knowledge, unless they have been given supervision or instruction concerning use of the appliance by a person responsible for their safety.
- Children should be supervised to ensure that they do not play with the appliance.

SAVE THESE INSTRUCTIONS

State of California Proposition 65 Warnings:

WARNING: This product contains one or more chemicals known to the State of California to cause cancer.

WARNING: This product contains one or more chemicals known to the State of California to cause birth defects or other reproductive harm.

Proper Disposal of Your Old Refrigerator

⚠WARNING

Suffocation Hazard

Remove doors from your old refrigerator.

Failure to do so can result in death or brain damage.

IMPORTANT: Child entrapment and suffocation are not problems of the past. Junked or abandoned refrigerators are still dangerous—even if they will sit for "just a few days." If you are getting rid of your old refrigerator, please follow these instructions to help prevent accidents.

Before You Throw Away Your Old Refrigerator or Freezer:

- Take off the doors.
- Leave the shelves in place so that children may not easily climb inside.

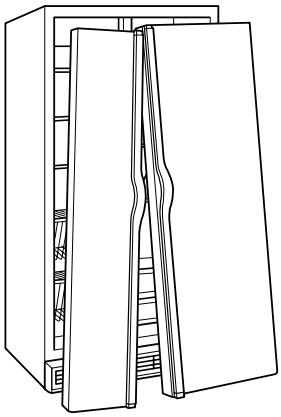

Important information to know about disposal of refrigerants:

Dispose of refrigerator in accordance with Federal and Local regulations. Refrigerants must be evacuated by a licensed, EPA certified refrigerant technician in accordance with established procedures.

INSTALLATION INSTRUCTIONS

Unpack the Refrigerator

⚠WARNING

Excessive Weight Hazard

Use two or more people to move and install refrigerator.

Failure to do so can result in back or other injury.

Remove packing materials. Do not use sharp instruments, rubbing alcohol, flammable fluids, or abrasive cleaners to remove tape or glue. These products can damage the surface of your refrigerator. For more information, see "Refrigerator Safety."

When Moving Your Refrigerator:

Your refrigerator is heavy. When moving the refrigerator for cleaning or service, be sure to cover the floor with cardboard or hardboard to avoid floor damage. Always pull the refrigerator straight out when moving it. Do not wiggle or "walk" the refrigerator when trying to move it, as floor damage could occur.

Important information to know about glass shelves and covers:

Do not clean glass shelves or covers with warm water when they are cold. Shelves and covers may break if exposed to sudden temperature changes or impact, such as bumping. Tempered glass is designed to shatter into many small, pebble-size pieces. This is normal. Glass shelves and covers are heavy. Use both hands when removing them to avoid dropping.

Door Removal, Leveling, and Alignment

Gather the required tools and parts and read all instructions before starting installation. Save these instructions for future reference.

NOTE: Before moving your product into your home, measure the doorway of your home to see whether you need to remove the refrigerator and freezer doors. If door removal is necessary, see the instructions below.

IMPORTANT: Before you begin, unplug refrigerator or disconnect power. Remove food, the ice storage bin (on some models), and any adjustable door or utility bins from doors.

TOOLS NEEDED: Bubble level; flat-blade screwdriver; 5/16" and 11/16" wrench; 1/4", 3/8", and 5/16" hex-head socket wrenches, TORX® T30®† screwdriver.

⚠WARNING

Electrical Shock Hazard

Disconnect power before removing doors.

Failure to do so can result in death or electrical shock.

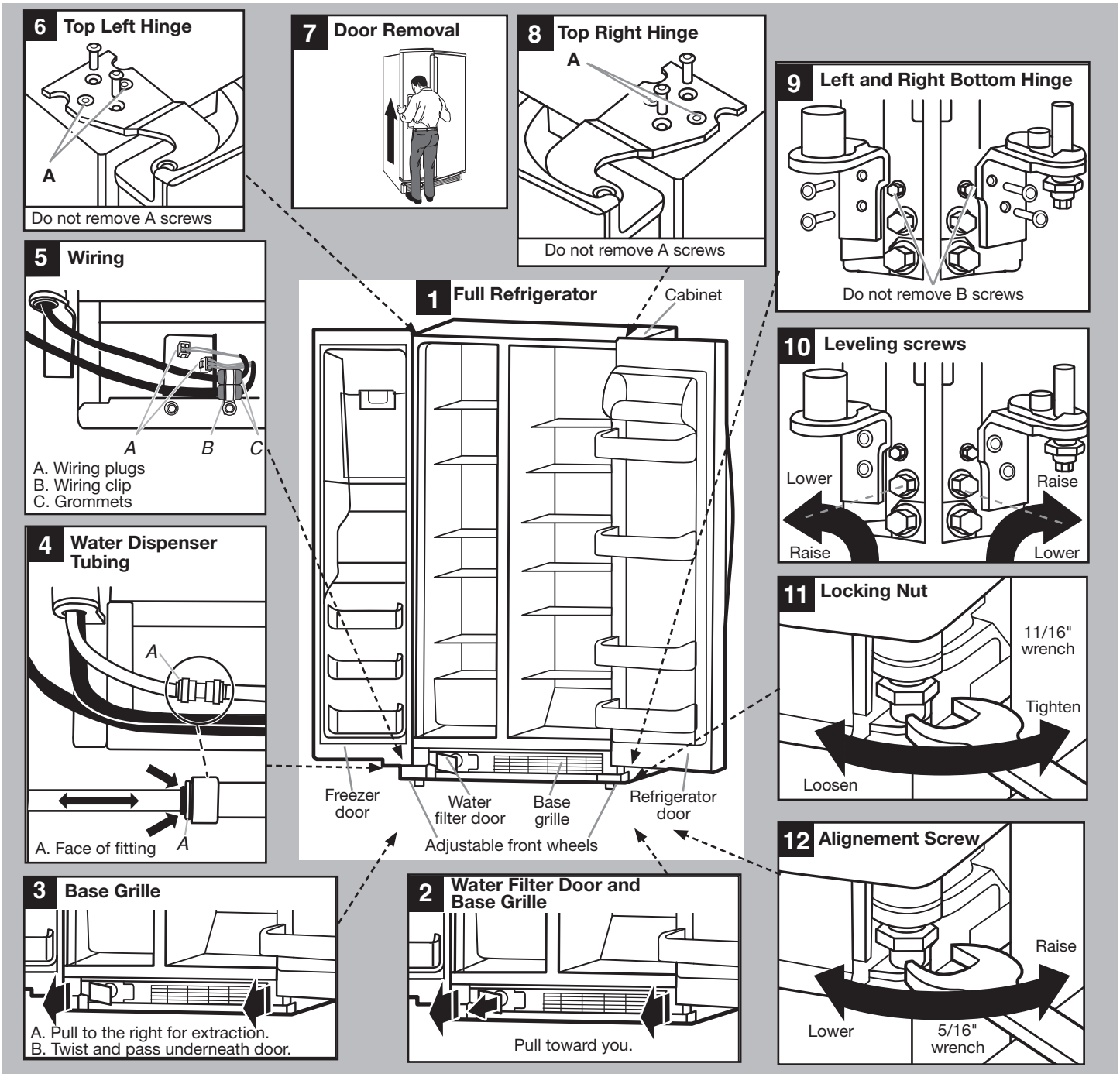

†TORX® and T30 are registered trademarks of Acument Intellectual Properties, LLC.

Remove the Doors

If your refrigerator does not fit through the doorway or you are getting rid of your old refrigerator, follow the steps below for door removal.

⚠WARNING

Electrical Shock Hazard

Disconnect power before removing doors.

Failure to do so can result in death or electrical shock.

1. Unplug refrigerator or disconnect power.
2. Fully open both doors. See graphic 1.
3. If your model has water dispensing, please open the water filter door by pulling it toward you. See graphic 2. It is not necessary to remove the water filter itself.
4. Pull the base grille toward you from the sides and then from the center until it dislodges. See graphic 2.
5. To remove the base grille, twist and pull the right side until this side passes underneath the refrigerator door. See graphic 3. Then pull the left side of the base grille for complete removal.
6. If your model has water dispensing in the door, disconnect the water dispenser tubing located below the freezer door.
   - Press the blue outer ring against the face of fitting and pull the dispenser tubing free. See graphic 4.

     NOTE: Keep the water tubing connector attached to the tube that runs underneath the freezer. The door cannot be removed if the connector is still attached to the tube that runs through the door hinge.
7. If your model has water dispensing in the door, disconnect the wiring located below the freezer door. See graphic 5.
   - Remove the wiring clip and the bracket wire using a 1/4" hexagonal head socket wrench.
   - Disconnect the wiring plugs from the bracket wire.
8. Close the freezer door and use a TORX® T30® screwdriver to remove the top hinge completely. See graphic 6.

   IMPORTANT: Do not remove either screw A. Hold the door while hinge is being removed.
9. Lift the freezer door straight up off from the bottom hinge. See graphic 7. The water dispenser tubing and wiring will remain attached to the freezer door.

   NOTE: This may require two people, one to lift the door and another to feed the water tubing and wiring into the bottom hinge pin.

   IMPORTANT: Rest the door on its side on a soft, clean surface, such as a towel, blanket, or piece of cardboard. This will help to avoid scratching or damaging the door, water tubing, and wiring.
10. Close the refrigerator door and use a TORX® T30® screwdriver to remove completely top hinge. See graphic 8.

    IMPORTANT: Do not remove either screw A. Hold the door while hinge is being removed.
11. Lift the refrigerator door straight up off from the bottom hinge. See graphic 7.

    IMPORTANT: Rest the door on its side on a soft, clean surface, such as a towel, blanket, or piece of cardboard. This will help to avoid scratching or damaging the door.
12. If your refrigerator without doors does not pass through the doorway, you may remove both bottom hinges. Use a 5/16" nut driver to remove these. See graphic 9.

    IMPORTANT: Do not remove either screw B.

Replacing or Reinstalling Door and Hinges

If your doors and bottom hinges have been removed, please follow the next instructions for reinstallation:

1. Reinstall both bottom hinges using a 5/16" nut driver to tighten screws. See graphic 9.
2. If your model has water dispensing in the door:
   - Lift the freezer door enough to feed the water dispenser tubing and wiring through the bottom hinge pin.

     NOTE: This may require two people, one to lift the door and the other to feed the water tubing and wiring into the bottom hinge pin. See graphic 7.
   - Insert the freezer door into the bottom hinge pin.

     IMPORTANT: Hold the door while hinge is being installed
3. Close the freezer door to align and reinstall the top hinge. Use a TORX® T30® screwdriver to tighten the screws. See graphic 8.

   IMPORTANT: Provide additional support for the door while top hinge is being reinstalled. Do not depend on the door magnets to assure the door to the cabinet.
4. If your model has water dispensing in the door, connect the water dispenser tubing. For the connection, push the tubing into the dispenser tubing until black mark touches the face of fitting. See graphic 4.
5. Connect the wiring. See graphic 5.
6. Reinstall the wiring clip & the bracket wire using a 1/4" hexagonal head socket wrench.
7. Connect the wiring plugs from the bracket wire.
8. Lift the refrigerator door enough to insert the door into the bottom hinge pin. See graphic 7.

   IMPORTANT: Hold the door while hinge is being installed.
9. Close the refrigerator door to align and reinstall the top hinge. Use a TORX® T30® screwdriver to tighten the screws. See graphic 6.

   IMPORTANT: Provide additional support for the door while top hinge is being reinstalled. Do not depend on the door magnets to assure the door to the cabinet.

Leveling and Door Closing

Your refrigerator has two front adjustable wheels. See graphic 1.

These are used to level the refrigerator under uneven floor conditions or want the doors to close more easily. Please follow the instructions below:

1. Place the refrigerator into its final location in the kitchen and open both doors.
2. Fully open both doors. See graphic 1.
3. If your model has water dispensing in the door, please open the water filter door by pulling it toward you. See graphic 2. It is not necessary to remove the water filter itself.
4. Pull the base grille toward you from the sides and then from the center until it dislodges. See graphic 2.
5. To remove the base grille, twist and pull the right side until this side passes underneath the refrigerator door. See graphic 3. Then pull the left side of the base grille for complete removal.
6. Use a 3/8" nut driver to turn the leveling screws located in both sides of the refrigerator. See graphic 10. Depending on uneven floor conditions, you must turn one or both screws to the right or left several times to raise or lower the refrigerator. Until the refrigerator is steady, use a bubble level if necessary.

7. Close both doors and check that they close as easily as you like. If not, turn both screws to the right to raise the refrigerator by tiling it more to the back until the doors close as easily as you like.
8. Check and make sure to the technician sheet is placed in the base grille cavity before assembling this into the cabinet.
9. Reinstall the base grille into the cabinet, introducing the left side first and then the right side of the base grille. See graphic 3. You may accommodate the water dispenser tubing and wiring into base grille cavity below the left bottom hinge.
10. Attach the base grille pushing into the cabinet clips. See graphic 2.

Door Alignment

The refrigerator doors are designed to be slightly misaligned vertically when the refrigerator is empty. Please follow the next steps to align the refrigerator doors.

1. Use an 11/16" open-ended wrench tool to loosen the locking nut located below the refrigerator door. See graphic 11. Accommodate the wrench tool so that it fits in the space.
2. Use a 5/16" open-ended wrench tool to turn the alignment screw. See picture 12. Depending on how the refrigerator door is misaligned in relation to the freezer door, you must turn the screw to the right to raise or to the left to lower the refrigerator door until both doors have been aligned vertically.
3. Tighten the 11/16" locking nut with the wrench tool.
4. Attach the base grille if it was dislodged.

Handle Installation and Removal

PARTS INCLUDED: Door handles (2), 1/8" hex key, spare setscrew(s)

To Install the Handles:

NOTE: The handle mounting setscrews are preinstalled in the handle.

1. Remove the handles, which are packed inside the refrigerator.

   NOTE: To avoid scratching the finish, place the handles on a towel or other soft surface.
2. Open the freezer door. On the refrigerator door, place the handle on the shoulder screws with the setscrews facing the freezer.

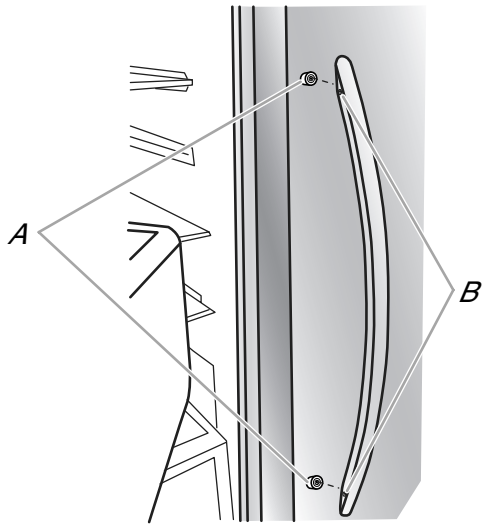

A. Shoulder screws
B. Setscrews inside the handle

3. Firmly push the handle toward the door until the handle base is flush against the door.
4. While holding the handle, insert the short end of the hex key into the upper hole and slightly rotate the hex key until it is engaged in the setscrew.

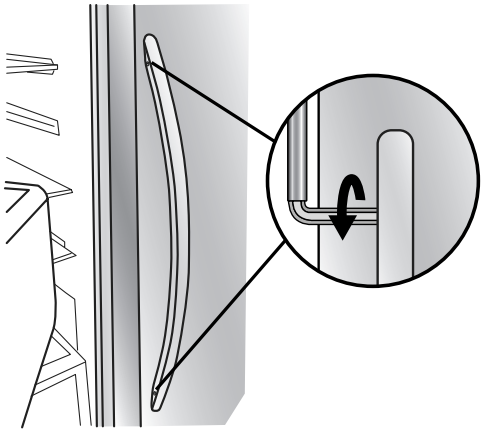

5. Using a clockwise motion, tighten the setscrew until it begins to contact the shoulder screw.
6. Repeat steps 4 and 5 to begin fastening the lower setscrew.
7. Once both setscrews have been partially tightened as outlined in the previous steps, fully tighten both the upper and lower setscrews.

   IMPORTANT: When the screws feel tight, tighten them an additional quarter-turn. The handle is not properly installed without this extra tightening.
8. Open the refrigerator door and close the freezer door. Repeat steps 2 through 7 to install the other handle onto the freezer door with the setscrews facing the refrigerator.
9. Save the hex key and all instructions.

To Remove the Handles:

1. While holding the handle, insert the short end of the hex key into the lower setscrew hole and slightly rotate the hex key until it is engaged in the setscrew.
2. Using a counterclockwise motion, loosen the setscrew a quarter-turn at a time.
3. Repeat steps 1 and 2 for the upper setscrew. Gently pull the handle away from the door.
4. If necessary, use a Phillips screwdriver to remove the shoulder screws from the door.

Location Requirements

⚠WARNING

Explosion Hazard

Keep flammable materials and vapors, such as gasoline, away from refrigerator.

Failure to do so can result in death, explosion, or fire.

IMPORTANT: This refrigerator is designed for indoor household use only.

To ensure proper ventilation for your refrigerator, allow for 1/2" (1.27 cm) of space on each side and at the top. Allow for 2" (5.08 cm) of space behind the refrigerator. If your refrigerator has an ice maker, allow extra space at the back for the water line connections. When installing your refrigerator next to a fixed wall, leave a 2" (5.08 cm) minimum space on each side (depending on your model) to allow the doors to swing open.

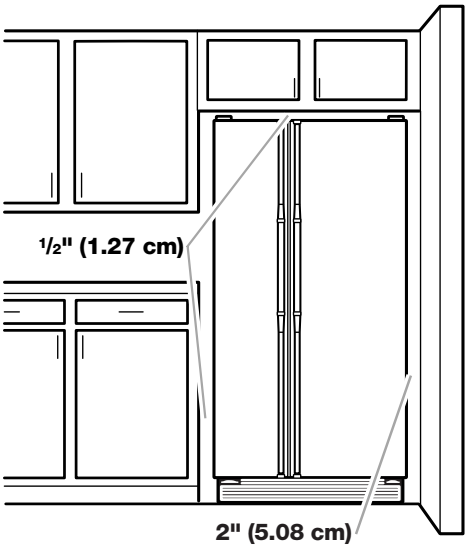

NOTES:

- This refrigerator is intended for use in a location where the temperature ranges from a minimum of 55°F (13°C) to a maximum of 110°F (43°C). The preferred room temperature range for optimum performance, which reduces electricity usage and provides superior cooling, is between 60°F (15°C) and 90°F (32°C). It is recommended that you do not install the refrigerator near a heat source, such as an oven or radiator.
- Normal minimum cabinet cut-out width required for product installation is 36" (91.44 cm). However, if the product is placed against an extended wall and the ability to remove the crisper pans is desired, an additional 18" (45.72 cm) of cabinet width is required, so a total cabinet opening width of 54" (137.16 cm) is recommended.

Electrical Requirement

⚠WARNING

Electrical Shock Hazard

Plug into a grounded 3 prong outlet.

Do not remove ground prong.

Do not use an adapter.

Do not use an extension cord.

Failure to follow these instructions can result in death, fire, or electrical shock.

Before you move your refrigerator into its final location, it is important to make sure you have the proper electrical connection.

Recommended Grounding Method

A 115-volt, 60 Hz, AC-only, 15- or 20-amp fused, grounded electrical supply is required. It is recommended that a separate circuit serving only your refrigerator be provided. Use an outlet that cannot be turned off by a switch. Do not use an extension cord.

NOTE: Before performing any type of installation or cleaning, or removing a light bulb, disconnect the refrigerator from the electrical source. When you are finished, reconnect the refrigerator to the electrical source and reset the control (Thermostat, Refrigerator or Freezer Control depending on the model) to the desired setting. See the “Using the Controls” section in the User Instructions, User Guide, or Use and Care Guide.

Water Supply Requirements

Gather the required tools and parts before starting installation. Read and follow the instructions provided with any tools listed here.

TOOLS NEEDED:

- Flat-blade screwdriver
- 7/16" and 1/2" open-end or two adjustable wrenches
- 1/4" nut driver
- 1/4" drill bit
- Cordless drill

NOTE: Your refrigerator dealer has a kit available with a 1/4" (6.35 mm) saddle-type shut-off valve, a union, and copper tubing. Before purchasing, make sure a saddle-type valve complies with your local plumbing codes. Do not use a piercing-type or 3/16" (4.76 mm) saddle valve which reduces water flow and clogs more easily.

IMPORTANT:

- All installations must meet local plumbing code requirements.
- Use copper tubing and check for leaks. Install copper tubing only in areas where the household temperatures will remain above freezing.

Water Pressure

A cold water supply with water pressure of between 30 and 120 psi (207 and 827 kPa) is required to operate the water dispenser and ice maker. If you have questions about your water pressure, call a licensed, qualified plumber.

- If your refrigerator has a water dispenser: After installation is complete, use the water dispenser to check the water pressure.
  - With the water filter removed, dispense 1 cup (237 mL) of water. If 1 cup of water is dispensed in 8 seconds or less, the water pressure to the refrigerator meets the minimum requirement.
  - If it takes longer than 8 seconds to dispense 1 cup of water, the water pressure to the refrigerator is lower than recommended. See “Troubleshooting” for suggestions.

Reverse Osmosis Water Supply

IMPORTANT: The pressure of the water supply coming out of a reverse osmosis system going to the water inlet valve of the refrigerator needs to be between 30 and 120 psi (207 and 827 kPa).

If a reverse osmosis water filtration system is connected to your cold water supply, the water pressure to the reverse osmosis system needs to be a minimum of 40 to 60 psi (276 to 414 kPa).

If the water pressure to the reverse osmosis system is less than 40 to 60 psi (276 to 414 kPa):

- Check to see whether the sediment filter in the reverse osmosis system is blocked. Replace the filter if necessary.
- Allow the storage tank on the reverse osmosis system to refill after heavy usage.
- If your refrigerator has a water filter, it may further reduce the water pressure when used in conjunction with a reverse osmosis system. Remove the water filter. See “Water Filtration System” in the User Instructions, User Guide, or Use and Care Guide.

If you have questions about your water pressure, call a licensed, qualified plumber.

Connect Water Supply

Read all directions before you begin.

IMPORTANT:

- Plumbing shall be installed in accordance with the International Plumbing Code and any local codes and ordinances.
- The gray water tubing on the back of the refrigerator (which is used to connect to the household water line) is a PEX (cross-linked polyethylene) tube. Copper and PEX tubing connections from the household water line to the refrigerator are acceptable, and will help avoid off-taste or odor in your ice or water. Check for leaks.

  If PEX tubing is used instead of copper, we recommend the following Whirlpool Part Numbers: W10505928RP (7 ft [2.14 m] jacketed PEX), 8212547RP (5 ft [1.52 m] PEX), or W10267701RP (25 ft [7.62 m] PEX).
- Install tubing only in areas where temperatures will remain above freezing.

TOOLS NEEDED:

Gather the required tools and parts before starting installation.

- Flat-blade screwdriver
- 7/16" and 1/2" open-end wrenches or two adjustable wrenches
- 1/4" nut driver

Connect to Water Line

IMPORTANT: If you turn the refrigerator on before the water line is connected, turn the ice maker off.

Style 1 (Recommended)

1. Unplug refrigerator or disconnect power.
2. Turn off main water supply. Turn on nearest faucet long enough to clear line of water.
3. Use a quarter-turn shut-off valve or the equivalent, served by a 1/2" copper household supply line.

   NOTE: To allow sufficient water flow to the refrigerator, a minimum 1/2" size copper household supply line is recommended.

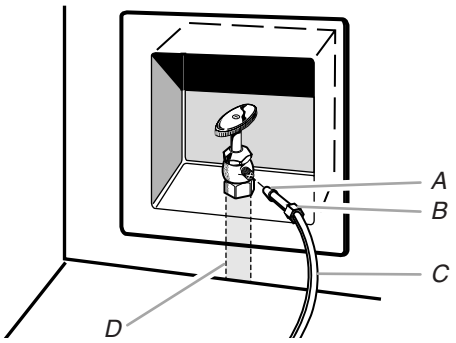

A. Bulb
B. Nut
C. Copper tubing (to refrigerator)
D. Household supply line (1/2" minimum)

4. Now you are ready to connect the copper tubing to the shut-off valve. Use 1/4" (6.35 mm) OD soft copper tubing to connect the shut-off valve and the refrigerator.
   - Ensure that you have the proper length needed for the job. Be sure both ends of the copper tubing are cut square.
   - Slip compression sleeve and compression nut onto copper tubing as shown. Insert end of tubing into outlet end squarely as far as it will go. Screw compression nut onto outlet end with adjustable wrench. Do not overtighten.

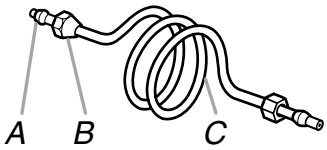

A. Compression sleeve
B. Compression nut
C. Copper tubing

5. Place the free end of the tubing into a container or sink, and turn on main water supply to flush out tubing until water is clear. Turn off shut-off valve on the water pipe.

   NOTE: Always drain the water line before making the final connection to the inlet of the water valve to avoid possible water valve malfunction.
6. Bend the copper tubing to meet the water line inlet, which is located on the back of the refrigerator cabinet as shown. Leave a coil of copper tubing to allow the refrigerator to be pulled out of the cabinet or away from the wall for service.

Style 2

1. Unplug refrigerator or disconnect power.
2. Turn off main water supply. Turn on nearest faucet long enough to clear line of water.
3. Locate a 1/2" (1.27 cm) to 1¼" (3.18 cm) vertical cold water pipe near the refrigerator.

   IMPORTANT:
   - Make sure it is a cold water pipe.
   - Horizontal pipe will work, but drill on the top side of the pipe, not the bottom. This will help keep water away from the drill and normal sediment from collecting in the valve.

4. Determine the length of copper tubing you need. Measure from the connection on the lower rear corner of refrigerator to the water pipe. Add 7 ft (2.1 m) to allow for cleaning. Use 1/4" (6.35 mm) O.D. (outside diameter) copper tubing. Be sure both ends of copper tubing are cut square.
5. Using a cordless drill, drill a 1/4" (6.35 mm) hole in the cold water pipe you have selected.

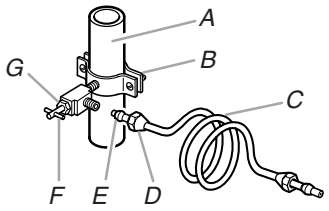

A.Cold water pipe
B. Pipe clamp
C.Copper tubing
D.Compression nut
E.Compression sleeve
F. Shut-off valve
G. Packing nut

6. Fasten the shut-off valve to the cold water pipe with the pipe clamp. Be sure the outlet end is solidly in the 1/4" (6.35 mm) drilled hole in the water pipe and that the washer is under the pipe clamp. Tighten the packing nut. Tighten the pipe clamp screws slowly and evenly so the washer makes a watertight seal. Do not overtighten, or you may crush the copper tubing.
7. Slip the compression sleeve and compression nut on the copper tubing as shown. Insert the end of the tubing into the outlet end squarely as far as it will go. Screw the compression nut onto outlet end with adjustable wrench. Do not overtighten.
8. Place the free end of the tubing in a container or sink, and turn on the main water supply. Flush the tubing until water is clear. Turn off the shut-off valve on the water pipe. Coil the copper tubing.

Connect to Refrigerator

Style 1

1. Unplug refrigerator or disconnect power.
2. Remove and discard the short, black plastic part from the end of the water line inlet.
3. Thread the nut onto the end of the tubing. Tighten the nut by hand. Then tighten it with a wrench two more turns. Do not overtighten.

   NOTE: To avoid rattling, be sure the copper tubing does not touch the cabinet's side wall or other parts inside the cabinet.

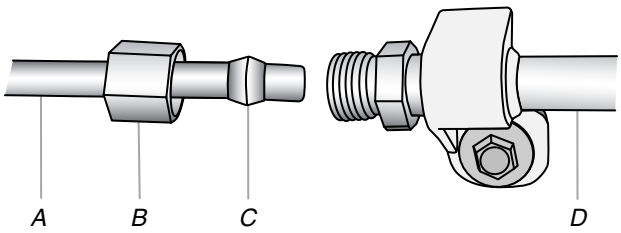

A. Household water line
B. Nut (purchased)
C. Ferrule (purchased)
D. Refrigerator water tubing

4. Install the water supply tube clamp around the water supply line to reduce strain on the coupling.
5. Turn shut-off valve on.
6. Check for leaks. Tighten any connections (including connections at the valve) or nuts that leak.

Style 2

1. Unplug refrigerator or disconnect power.
2. Remove and discard the plastic part that is attached to the inlet of the water valve.
3. Attach the copper tube to the valve inlet using a compression nut and sleeve as shown. Tighten the compression nut. Do not overtighten.
4. Use the tube clamp on the back of the refrigerator to secure the tubing to the refrigerator as shown. This will help avoid damage to the tubing when the refrigerator is pushed back against the wall.
5. Turn shut-off valve on.
6. Check for leaks. Tighten any connections (including connections at the valve) or nuts that leak.

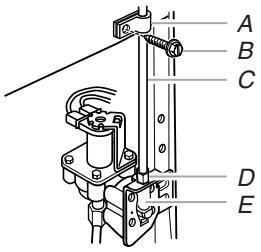

A. Tube clamp
B. Tube clamp screw
C. Copper tubing
D. Compression nut
E. Valve inlet

7. On some models, the ice maker is equipped with a built-in water strainer. If your water conditions require a second water strainer, install it in the 1/4" (6.35 mm) water line at either tube connection. Obtain a water strainer from your nearest appliance dealer.

Style 3

1. Unplug refrigerator or disconnect power.
2. Remove and discard the black nylon plug from the gray water tube on the rear of the refrigerator.
3. If the gray water tube supplied with the refrigerator is not long enough, a 1/4" x 1/4" (6.35 mm x 6.35 mm) coupling is needed in order to connect the water tubing to an existing household water line. Thread the provided nut onto the coupling on the end of the copper tubing.

   NOTE: Tighten the nut by hand. Then tighten it with a wrench two more turns. Do not overtighten.

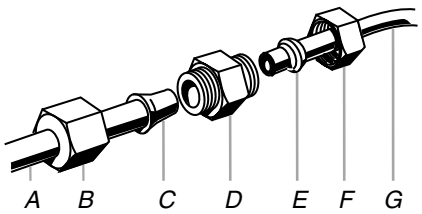

A. Refrigerator water tubing
B. Nut (provided)
C. Bulb
D. Coupling (purchased)
E. Ferrule (purchased)
F. Nut (purchased)
G. Household water line

4. Turn shut-off valve on.
5. Check for leaks. Tighten any nuts or connections (including connections at the valve) that leak.

Complete the Installation

⚠WARNING

Electrical Shock Hazard

Plug into a grounded 3 prong outlet.

Do not remove ground prong.

Do not use an adapter.

Do not use an extension cord.

Failure to follow these instructions can result in death, fire, or electrical shock.

1. Plug into a grounded 3 prong outlet.
2. Flush the water system. See “Water and Ice Dispensers” in the User Instructions or User Guide.

NOTE: Allow 24 hours to produce the first batch of ice. Allow 72 hours to completely fill ice container.

REFRIGERATOR CARE

Cleaning

⚠WARNING

Explosion Hazard

Use nonflammable cleaner.

Failure to do so can result in death, explosion, or fire.

Both the refrigerator and freezer sections defrost automatically. However, clean both sections about once a month to avoid buildup of odors. Wipe up spills immediately.

IMPORTANT: Because air circulates between both sections, any odors formed in one section will transfer to the other. You must thoroughly clean both sections to eliminate odors. To avoid odor transfer and drying out of food, wrap or cover foods tightly.

To Clean Your Refrigerator:

NOTE: Do not use abrasive or harsh cleaners such as window sprays, scouring cleansers, flammable fluids, cleaning waxes, concentrated detergents, bleaches or cleansers containing petroleum products on plastic parts, interior and door liners or gaskets. Do not use paper towels, scouring pads, or other harsh cleaning tools.

1. Unplug refrigerator or disconnect power.
2. Hand wash, rinse, and dry removable parts and interior surfaces thoroughly. Use a clean sponge or soft cloth and a mild detergent in warm water.
3. Wash stainless steel and painted metal exteriors with a clean sponge or soft cloth and a mild detergent in warm water.
4. There is no need for routine condenser cleaning in normal home operating environments. If the environment is particularly greasy or dusty, or there is significant pet traffic in the home, the condenser should be cleaned every 2 to 3 months to ensure maximum efficiency.

   If you need to clean the condenser:

   - Remove the base grille. See the “Door Removal” instructions, either in the User Instructions or the Installation Instructions and Owner’s Manual, or in the separate instruction sheet provided with your refrigerator.
   - Use a vacuum cleaner with a soft brush to clean the grille, the open areas behind the grille and the front surface area of the condenser.
   - Replace the base grille when finished.
5. Plug in refrigerator or reconnect power.

Lights

NOTE: Not all bulbs will fit your refrigerator. Be sure to replace the bulb with one of the same size, shape and wattage.

- The dispenser lights are LEDs that cannot be changed.
- On some models, the interior lights are LEDs that cannot be changed.
- On some models, the interior lights require a 40-watt bulb.

1. Unplug refrigerator or disconnect power.
2. Remove light shield when applicable.

NOTE: To clean the light shield, wash it with warm water and liquid detergent. Rinse and dry the shield well.

3. Remove light bulb and replace with one of the same size, shape and wattage.
4. Replace light shield when applicable.
5. Plug in refrigerator or reconnect power.

Vacation and Moving Care

Vacations

If You Choose to Leave Refrigerator On While You Are Away:

1. Use up any perishables and freeze other items.
2. If your refrigerator has an automatic ice maker and is connected to the household water supply, turn off the water supply to the refrigerator. Property damage can occur if the water supply is not turned off.
3. If you have an automatic ice maker, turn off the ice maker.

   NOTE: Depending on your model, raise the wire shut-off arm to OFF (up) position or press the switch to OFF (right).
4. Empty the ice bin.

If You Choose to Turn Refrigerator Off Before You Leave:

1. Remove all food from the refrigerator.
2. If your refrigerator has an automatic ice maker:
   - Turn off the water supply to the ice maker at least one day ahead of time.
   - When the last load of ice drops, raise the wire shut-off arm to the OFF (up) position or move the switch to the OFF (right) setting.
3. Unplug refrigerator.
4. Clean, wipe, and dry thoroughly.
5. Tape rubber or wood blocks to the tops of both doors to prop them open far enough for air to get in. This stops odor and mold from building up.

Moving

When you are moving your refrigerator to a new home, follow these steps to prepare it for the move.

1. If your refrigerator has an automatic ice maker:
   - Turn off the water supply to the ice maker at least one day ahead of time.
   - Disconnect the water line from the back of the refrigerator.
   - When the last load of ice drops, raise the wire shut-off arm to the OFF (up) position or move the switch to the OFF (right) setting.
2. Remove all food from the refrigerator and pack all frozen food in dry ice.
3. Empty the ice bin.
4. Unplug refrigerator.
5. Clean, wipe, and dry thoroughly.
6. Take out all removable parts, wrap them well, and tape them together so they don't shift and rattle during the move.
7. Depending on the model, raise the front of the refrigerator so it rolls more easily or screw in the leveling legs so they don't scrape the floor. See "Adjust the Doors" or "Door Removal, Leveling and Alignment."
8. Tape the doors closed and tape the power cord to the back of the refrigerator.

When you get to your new home, put everything back and refer to the Installation Instructions for preparation instructions. Also, if your refrigerator has an automatic ice maker, remember to reconnect the water supply to the refrigerator.

TROUBLESHOOTING

First try the solutions suggested here or visit our website to possibly avoid the cost of a service call.

⚠WARNING

Electrical Shock Hazard

Plug into a grounded 3 prong outlet.

Do not remove ground prong.

Do not use an adapter.

Do not use an extension cord.

Failure to follow these instructions can result in death, fire, or electrical shock.

GENERAL OPERATION	Possible Causes and/or Recommended Solutions
Refrigerator will not operate	■ **Not connected to an electrical supply -** Plug the power cord into a grounded 3 prong outlet. Do not use an extension cord. ■ **No power to the electrical outlet -** Plug in a lamp to see if the outlet is working. ■ **Household fuse has blown or circuit breaker has tripped -** Replace the fuse or reset the circuit breaker. If the problem continues, contact a licensed electrician. ■ **New installation -** Following installation, allow 24 hours for the refrigerator and freezer to cool completely. **NOTE:** Adjusting the temperature control(s) to the coldest setting will not cool either compartment (refrigerator or freezer) more quickly.
Motor seems to run too much	■ **Your new refrigerator has an energy-efficient motor -** The refrigerator may run longer than you're used to, because the compressor and fans operate at lower speeds that are more energy-efficient. This is normal. **NOTE:** Your refrigerator may run even longer if the room is warm, a large load of food is added, the doors are opened often, or if a door has been left open.
Refrigerator seems noisy	The compressor in your new refrigerator regulates temperature more efficiently and uses less energy than older models. During various stages of operation, you may hear normal operating sounds that are unfamiliar. **The following noises are normal:** ■ **Buzzing/Clicking -** Heard when the water valve opens and closes to dispense water or fill the ice maker. If the refrigerator is connected to a water line, this is normal. If the refrigerator is not connected to a water line, turn off the ice maker. ■ **Cracking/Crashing -** Heard when ice is ejected from the ice maker mold. ■ **Popping -** Heard when the inside walls contract/expand, especially during initial cool down. ■ **Pulsating/Whirring -** Heard when the fans/compressor adjust to optimize performance during normal operation. ■ **Rattling -** Heard when water passes through the water line, or due to the flow of refrigerant. Rattling may also come from items placed on top of the refrigerator. ■ **Water running or gurgling -** Heard when ice melts during the defrost cycle and water runs into the drain pan. ■ **Sizzling -** Heard when water drips onto the heater during the defrost cycle.

GENERAL OPERATION	Possible Causes and/or Recommended Solutions
Temperature is too warm	■ **New installation -** Following installation, allow 24 hours for the refrigerator and freezer to cool completely. **NOTE:** Adjusting the temperature control(s) to the coldest setting will not cool either compartment (refrigerator or freezer) more quickly. ■ **Doors are opened often or not closed completely -** This allows warm air to enter the refrigerator. Minimize door openings, keep the doors fully closed, and make sure both doors are properly sealed. ■ **Air vents are blocked -** Remove items that are immediately in front of the vents. ■ **Large amount of warm food recently added -** Allow several hours for the refrigerator to return to its normal temperature. ■ **Controls are not set correctly for the surrounding conditions -** Adjust the controls to a colder setting. Check the temperature again in 24 hours.
Temperature is too cold	■ **Controls are not set correctly for the surrounding conditions -** Adjust the controls to a warmer setting. Check the temperature again in 24 hours. ■ **Top refrigerator shelf is colder than lower shelves -** On some models, air from the freezer enters the refrigerator compartment through vents near the top refrigerator shelf. As a result, the top shelf can be slightly colder than lower shelves. ■ **Air vents are blocked -** Remove items that are immediately in front of the vents.
Interior moisture buildup	**NOTE:** Some moisture buildup is normal. Clean with a soft dry cloth. ■ **Room is humid -** A humid environment contributes to moisture buildup. Use the refrigerator only in an indoor location, with as little humidity as possible. ■ **Doors are opened often or not closed completely -** This allows humid air to enter the refrigerator. Minimize door openings, keep the doors fully closed, and make sure both doors are properly sealed.
Interior lights do not work	■ **Doors have been open for an extended period of time -** Close the doors to reset the lights. ■ **Light bulb is loose in the socket or has burned out -** On models with incandescent interior light bulbs, tighten or replace the bulb. See the “Lights” section. **NOTE:** On models with LED lights, call for assistance or service if the interior lights do not illuminate when either door is opened. See the Warranty in the User Instructions or User Guide for contact information.
Dispenser lights do not work (on some models)	■ **Dispenser light is turned off -** On some models, if the dispenser light is set to OFF, the light will turn on only when a dispenser pad/lever is pressed. If you want the dispenser light to stay on continuously, select a different setting. See “Water and Ice Dispensers” in the User Instructions or User Guide. ■ **Dispenser light is set to AUTO or NIGHT LIGHT -** On some models, if the dispenser light is set to AUTO or NIGHT LIGHT, make sure the dispenser light sensor is not blocked. See “Water and Ice Dispensers” in the User Instructions or User Guide. **NOTE:** On models with LED lights, call for assistance or service if the dispenser lights do not operate correctly. See the Warranty in the User Instructions or User Guide for contact information.

⚠WARNING

Explosion Hazard

Use nonflammable cleaner.

Failure to do so can result in death, explosion, or fire.

DOORS AND LEVELING	Possible Causes and/or Recommended Solutions
Doors are difficult to open	■ **Gaskets are dirty or sticky -** Clean the gaskets and contact surfaces with mild soap and warm water. Rinse and dry with a soft cloth.
Doors will not close completely	■ **Door is blocked open -** Move food packages away from the door. Make sure all bins and shelves are in their correct positions. Make sure all packaging materials have been removed.
Doors appear to be uneven	■ **Doors need to be aligned, or refrigerator needs to be leveled -** See the leveling and door alignment instructions.
Refrigerator rocks and is not stable	■ **Refrigerator is not level -** To stabilize the refrigerator, remove the base grille and lower the leveling feet until they touch the floor. See the leveling and door alignment instructions.

⚠WARNING

Cut Hazard

Use a sturdy glass when dispensing ice.

Failure to do so can result in cuts.

ICE AND WATER	Possible Causes and/or Recommended Solutions
Ice maker is not producing ice, not producing enough ice, or producing small/hollow ice	■ **Refrigerator is not connected to a water supply, or the water supply shut-off valve is not fully turned on -** Connect the refrigerator to a water supply and make sure the water shut-off valve is fully open. ■ **Kink in the water source line -** A kink in the water line can reduce water flow, resulting in decreased ice production, small ice cubes, and/or hollow or irregularly-shaped ice. Straighten the water line. ■ **Ice maker is not turned on -** Turn on the ice maker. See “Ice Maker and Storage Bin” in the User Instructions or User Guide. ■ **New installation -** After connecting the refrigerator to a water source, flush the water system. (See “Water and Ice Dispensers” in the User Instructions or User Guide.) Wait 24 hours for ice production to begin. Wait 72 hours for full ice production. Discard the first three batches of ice produced. ■ **Large amount of ice was recently removed -** Allow sufficient time for the ice maker to produce more ice. ■ **Ice is jammed in the ice maker ejector arm -** Remove ice from the ejector arm using a plastic utensil. ■ **Inadequate water pressure -** Verify that the household has adequate water pressure. See the “Water Supply Requirements” section. ■ **Water filter is installed incorrectly -** Make sure the filter is properly installed. See “Water Filtration System” in the User Instructions or User Guide. ■ **A reverse osmosis water filtration system is connected to your cold water supply -** This can decrease water pressure. See the “Water Supply Requirements” section. **NOTE:** If questions remain regarding water pressure, contact a licensed, qualified plumber.

ICE AND WATER	Possible Causes and/or Recommended Solutions
Ice dispenser will not operate properly	■ **Doors not closed completely -** Make sure both doors are firmly closed. (On some models, only the freezer door must be closed in order to operate the dispenser.) ■ **New installation -** After connecting the refrigerator to a water source, flush the water system. (See "Water and Ice Dispensers" in the User Instructions or User Guide.) Wait 24 hours for ice production to begin. Wait 72 hours for full ice production. Discard the first three batches of ice produced. ■ **Ice maker is not turned on, or ice bin is not installed correctly -** Turn on the ice maker and make sure the ice storage bin is firmly in position. See "Ice Maker and Storage Bin" in the User Instructions or User Guide. ■ **Ice is clogged or frozen together in the ice storage bin, or ice is blocking the ice delivery chute -** Remove or separate the clogged ice, using a plastic utensil if necessary. Clean the ice delivery chute and the bottom of the ice storage bin using a warm damp cloth, then dry both thoroughly. To avoid clogging and to maintain a fresh supply of ice, empty the storage bin and clean both the storage bin and the delivery chute every 2 weeks. ■ **Wrong ice has been added to the storage bin -** Use only ice cubes produced by the current ice maker. ■ **Dispenser is locked -** Unlock the dispenser. See "Water and Ice Dispensers" in the User Instructions or User Guide. ■ **Ice dispenser jams while dispensing crushed ice -** For models with the ice storage bin on the door, temporarily switch from crushed ice to cubed ice to clear the jam. ■ **Dispenser pad/lever has been pressed too long -** Ice will automatically stop dispensing. Wait a few minutes for the dispenser to reset, then resume dispensing. Take large amounts of ice directly from the ice bin, not through the dispenser. ■ **Water pressure to the home is not at or above 30 psi (207 kPa) -** The water pressure to the home affects the flow from the dispenser. See the "Water Supply Requirements" section. ■ **Water filter is clogged or incorrectly installed -** Replace filter or reinstall it correctly. See "Water Filtration System" in the User Instructions or User Guide.
Ice or water has an off-taste, odor, or gray color	■ **New plumbing connections -** New plumbing connections can result in off-flavored or discolored ice or water. This problem should go away over time. ■ **Ice has been stored too long -** Discard the ice and wash the ice bin. Allow 24 hours for the ice maker to produce new ice. ■ **Odor has transferred from food -** Use airtight moisture-proof packaging to store food. ■ **Use of non-recommended water supply line -** Odors and tastes can transfer from certain materials used in non-recommended water supply lines. Use only a recommended water supply line. See the "Water Supply Requirements" section. ■ **There are minerals (such as sulfur) in the water -** A water filter may need to be installed in order to remove the minerals. ■ **Water filter was recently installed or replaced -** Gray or dark discoloration in ice or water indicates that the water filtration system needs additional flushing. See "Water and Ice Dispensers" in the User Instructions or User Guide.
Water dispenser will not operate properly	■ **Doors not closed completely -** Make sure both doors are firmly closed. (On some models, only the freezer door must be closed in order to operate the dispenser.) ■ **Refrigerator is not connected to a water supply, or the water supply shut-off valve is not turned on -** Connect the refrigerator to a water supply and make sure the water shut-off valve is fully open. ■ **Kink in the water source line -** A kink in the water line can reduce water flow to the dispenser. Straighten the water line. ■ **Water pressure to the home is not at or above 30 psi (207 kPa) -** The water pressure to the home affects the flow from the dispenser. See the "Water Supply Requirements" section. ■ **New installation -** After connecting the refrigerator to a water source, flush the water system. See "Water and Ice Dispensers" in the User Instructions or User Guide. ■ **Dispenser is locked -** Unlock the dispenser. See "Water and Ice Dispensers" in the User Instructions or User Guide. ■ **Water filter is clogged or incorrectly installed -** Replace filter or reinstall it correctly. See "Water Filtration System" in the User Instructions or User Guide. ■ **A reverse osmosis water filtration system is connected to your cold water supply -** This can decrease water pressure. See the "Water Supply Requirements" section. **NOTE:** If questions remain regarding water pressure, contact a licensed, qualified plumber.

ICE AND WATER	Possible Causes and/or Recommended Solutions
Water is leaking or dripping from the dispenser	**NOTE:** After dispensing, a few additional drops of water are normal. ■ **Glass was not held under the dispenser long enough -** Hold the glass under the dispenser for 2 to 3 seconds after releasing the dispenser pad/lever. ■ **New installation, or water filter was recently installed or replaced -** Air in the water lines causes the water dispenser to drip. Flush the water system to remove the air in the water lines. See “Water and Ice Dispensers” in the User Instructions or User Guide. ■ **Residual ice in the dispenser chute is melting -** Make sure the ice chute is free of ice shavings or pieces.
Water is leaking from the back of the refrigerator	■ **Water line connections are not fully tightened -** Make sure all connections are firmly tightened. See the “Connect Water Supply” section.
Water from the dispenser is not cool enough (on some models)	**NOTE:** Water from the dispenser is chilled to 50°F (10°C). ■ **New installation -** Allow 24 hours after installation for the water supply to cool completely. ■ **Recently dispensed a large amount of water -** Allow 24 hours for the new water supply to cool completely. ■ **Water has not been recently dispensed -** The first glass of water may not be cool. Discard the first glass of water dispensed. ■ **Refrigerator is not connected to a cold water pipe -** Make sure the refrigerator is connected to a cold water pipe. See the “Water Supply Requirements” section.

PERFORMANCE DATA SHEET

Water Filtration System

Model P5WB2L/P4RFWB Capacity 200 Gallons (757 Liters)

System tested and certified by NSF International against NSF/ANSI Standard 42 for the reduction of Chlorine Taste and Odor, and Particulate Class I*; and against NSF/ANSI Standard 53 for the reduction of Live Cysts, Asbestos, Lead, Lindane, Toxaphene, Atrazine, and 2,4 - D.

This system has been tested according to NSF/ANSI Standards 42 and 53 for the reduction of the substances listed below. The concentration of the indicated substances in water entering the system was reduced to a concentration less than or equal to the permissible limit for water leaving the system, as specified in NSF/ANSI Standards 42 and 53.

Substance Reduction Aesthetic Effects	**NSF Reduction Requirements**	**Average Influent**	**Influent Challenge Concentration**	**Maximum Effluent**	**Minimum % Reduction**	**Average % Reduction**
Chlorine Taste/Odor Particulate Class I*	50% reduction 85% reduction	2.0 mg/L 7,300,000 #/mL	2.0 mg/L ± 10% At least 10,000 particles/mL	0.20 mg/L 75,000 #/mL**	97 99	97.2 99.4
Contaminant Reduction	**NSF Reduction Requirements**	**Average Influent**	**Influent Challenge Concentration**	**Maximum Effluent**	**Minimum % Reduction**	**Average % Reduction**
Live Cysts†	99.95%	160,000/L	50,000/L min.	54/L†	99.97	99.99
Asbestos	99%	87 MFL	10^7 to 10^8 fibers/L††	0.17 MFL	99	99
Lead: @ pH 6.5 Lead: @ pH 8.5	0.010 mg/L 0.010 mg/L	0.160 mg/L 0.140 mg/L	0.15 mg/L ± 10% 0.15 mg/L ± 10%	0.001 mg/L 0.005 mg/L	99.4 98.6	99.4 98.6
Lindane	0.0002 mg/L	0.0019 mg/L	0.002 mg/L ± 10%	0.00002 mg/L	98.9	99
Toxaphene	0.003 mg/L	0.014 mg/L	0.015 mg/L ± 10%	0.001 mg/L	93	93
Atrazine	0.003 mg/L	0.0094 mg/L	0.009 mg/L ± 10%	0.0005 mg/L	94.5	94.7
2,4 - D	0.07 mg/L	0.220 mg/L	0.210 mg/L ± 10%	0.028 mg/L	87.5	96.1

Test Parameters: pH = 7.5 ± 0.5 unless otherwise noted. Flow = 0.5 gpm (1.9 Lpm). Pressure = 60 psig (413.7 kPa). Temp. = 68°F to 71.6°F (20°C to 22°C). Rated service capacity = 200 gallons (757 liters).

- It is important that operational, maintenance, and filter replacement requirements be carried out for the product to perform as advertised. Property damage can occur if all instructions are not followed.
- Use replacement filter according you filtration system, see “Ice and Water” in the User Guide

  Water Filter:
  Water Filtration System Style 1 - Order Part # EDR1RXD1
  Water Filtration System Style 2 - Order Part # EDR2RXD1

  When the water filter status changes from TURN OFF to RED light on your control panel, it is recommended that you replace the filter.
- After changing the water filter, flush the water system. See “Water and Ice Dispensers” or “Water Dispenser” in the User Instructions or User Guide.
- These contaminants are not necessarily in your water supply. While testing was performed under standard laboratory conditions, actual performance may vary.
- The product is for cold water use only.
- The water system must be installed in compliance with state and local laws and regulations.
- Do not use with water that is microbiologically unsafe or of unknown quality without adequate disinfection before or after the system. Systems certified for cyst reduction may be used on disinfected waters that may contain filterable cysts.
- Refer to the “Warranty” section (in the User Instructions or User Guide) for the Manufacturer’s name, address and telephone number.
- Refer to the “Warranty” section (in the User Instructions or User Guide) for the Manufacturer’s limited warranty.

Application Guidelines/Water Supply Parameters	
Water Supply	City or Well
Water Pressure	30 - 120 psi (207 - 827 kPa)
Water Temperature	33° - 100°F (0.6° - 37.8°C)
Service Flow Rate	0.5 gpm (1.9 Lpm) @ 60 psi

*Class I particle size: >0.5 to <1 um
**Test requirement is at least 100,000 particles/mL of AC Fine Test Dust.
†Based on the use of Cryptosporidium parvum oocysts
††Fibers greater than 10 um in length

® NSF is a registered trademark of NSF International.

©2017. All rights reserved.
Tous droits réservés.