Installation Manual

Installation and Appliance Setup

CAUTION! Risk of Fire! *DO NOT store instruction manuals inside fireplace cavity. High temperatures could cause a fire.*

INSTALLER: Leave this manual with the appliance, not inside the appliance.

CONSUMER: Retain this manual for future reference. Do not store inside the appliance

NOTICE: DO NOT *discard this manual!*

MAJESTIC

GAS-FIRED

C UL US

LISTED

Models:

RUBYP30IN

RUBYP30IL

RUBYP30IN-BIR

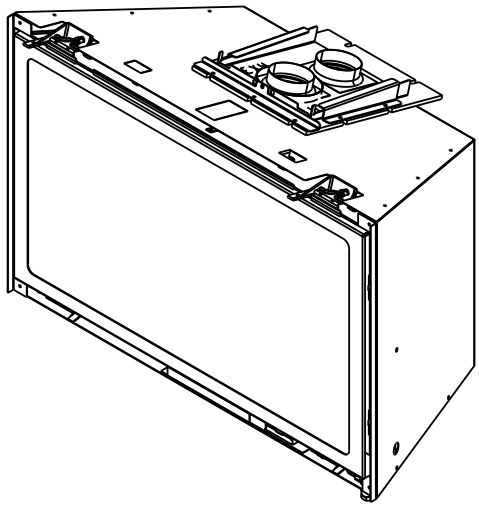

This appliance may be installed as an OEM installation in manufactured home (USA only) or mobile home and must be installed in accordance with the manufacturer's instructions and the *Manufactured Home Construction and Safety Standard, Title 24 CFR, Part 3280* in the United States, or the *Standard for Installation in Mobile Homes, CAN/CSA Z240 MH Series,* in Canada.

This appliance is only for use with the type(s) of gas indicated on the rating plate. This appliance is not convertible for use with other gases, unless a certified kit is used.

⚠ WARNING:
FIRE OR EXPLOSION HAZARD
Failure to follow safety warnings exactly could result in serious injury, death, or property damage.

- **DO NOT** store or use gasoline or other flammable vapors and liquids in the vicinity of this or any other appliance.
- **What to do if you smell gas**
  - **DO NOT** try to light any appliance.
  - **DO NOT** touch any electrical switch. **DO NOT** use any phone in your building.
  - Leave the building immediately.
  - Immediately call your gas supplier from a neighbor's phone. Follow the gas supplier's instructions.
  - If you cannot reach your gas supplier, call the fire department.
- Installation and service must be performed by a qualified installer, service agency, or the gas supplier.

⚠ DANGER

HOT GLASS WILL CAUSE BURNS.

DO NOT TOUCH GLASS UNTIL COOLED.

NEVER ALLOW CHILDREN TO TOUCH GLASS.

A barrier designed to reduce the risk of burns from the hot viewing glass is provided with this appliance and must be installed for the protection of children and other at-risk individuals.

Safety Alert Key:

- ***DANGER!*** *Indicates a hazardous situation which, if not avoided will result in death or serious injury.*
- ***WARNING!*** *Indicates a hazardous situation which, if not avoided could result in death or serious injury.*
- ***CAUTION!*** *Indicates a hazardous situation which, if not avoided, could result in minor or moderate injury.*
- ***NOTICE:*** *Used to address practices not related to personal injury.*

Note: *The term "recommend" or "recommended" does not indicate a requirement. It is a best practice suggested by Hearth & Home Technologies®.*

Table of Contents

Installation Standard Work Checklist 3

1 Product Specific and Important Safety Information

A. Appliance Certification 4
B. Glass Specifications 4
C. BTU Specifications 4
D. High Altitude Installations 4
E. Non-Combustible Materials Specification 4
F. Combustible Materials Specification 4
G. Electrical Codes 4
H. California 4

2 Getting Started

A. Design and Installation Considerations 5
B. Good Faith Wall Surface 6
C. Tools and Supplies Needed 8
D. Inspect Appliance and Components 8

3 Appliance / Fireplace Requirements and Clearances

A. Appliance Weights and Dimensions 9
B. Decorative Barrier Front Dimension Diagrams 10
C. Minimum Fireplace Opening 13
D. Zero Clearance Wall Extension 15
E. Mantel, Wall Projections, & Hearth Extensions 17
F. Hearth Extension 18

4 Installation Preparation

A. Cleaning 20
B. Flue Damper 20
C. Gas Line 20
D. Fireplace Conversion Notice 20
E. Electrical Outlet Box 20

5 Installing Vent Pipe and Appliance

A. Vent Limits 21
B. Using Vertical Restrictor 22
C. Venting Components 23
D. Connecting to SLP 24
E. Connecting Vent Pipe 25
F. Placing, Securing and Leveling the Appliance . . . 26
G. Installing Termination Cap 27

6 Electrical Information

A. General Information 28
B. Service for Fan 30
C. Access Pilot and Burner Assemblies 31
D. Service for LED's 31

7 Gas Information

A. Fuel Conversion 32
B. Gas Pressure 33
C. Gas Connection 33
D. High Altitude Installations 34
E. Air Shutter Setting 34
F. Service / Replace Appliance Gas Valve 34

8 Finishing

A. Mantel, Wall Projections & Hearth Extensions 35
B. Hearth Extension 36

9 Appliance Setup

A. Fixed Glass Assembly 38
B. Remove the Shipping Materials 39
C. Clean the Appliance 39
D. Accessories 39
E. Glass Media Placement 40
F. Glowing Embers Placement 40
G. Install the Logs, Media and Embers 41
H. Install Decorative Barrier Front and Surround 47
I. Appliance Break-In 48
J. Heat Management 48

10 Reference Materials

A. Vent Components 49
B. Accessories 50
C. QR Codes 51

➔ = Contains updated information.

Installation Standard Work Checklist

ATTENTION INSTALLER:
Follow this Standard Work Checklist

This standard work checklist is to be used by the installer in conjunction with, not instead of, the instructions contained in this installation manual.

Customer: _____
Lot/Address: _____
_____

Model (circle one): RUBYP30IN, RUBYP30IL, RUBYP30IN-BIR

Date Installed: _____
Location of Fireplace: _____
Installer: _____
Dealer/Distributor Phone # _____
Serial #: _____

WARNING! Risk of Fire or Explosion! *Failure to install appliance according to these instructions could lead to a fire or explosion. Install ONLY components and accessories approved by Hearth & Home Technologies. Unapproved components and accessories could cause fireplace to overheat.*

Appliance Install	**YES**	**IF NO, WHY?**
Verified fireplace is clean and remove/block open damper/modify damper for vent pipe clearance (Section 4).	☐	_____
Verified clearances to combustibles (Sections 3, 5, 8).	☐	_____
Located multi-purpose tool (Section 2).	☐	_____
Appliance is leveled and secured (Section 5.F).	☐	_____
Venting/Chimney Section 5		
Exhaust and inlet flex vent pipe are properly formed and routed through existing fireplace damper.	☐	_____
Exhaust and inlet flex vent pipe are properly installed to the correct collars, sealed and secured to top slide plate and to the termination cap.	☐	_____
Vertical restrictors are properly set (if applicable).	☐	_____
Exterior roof flashing installed and sealed.	☐	_____
Termination cap installed, secured and sealed to top slide plate.	☐	_____
Electrical Section 6		
Unswitched power (110-120 VAC) provided to the appliance.	☐	_____
Switch wires properly installed.	☐	_____
Gas Section 7		
Proper appliance for fuel type.	☐	_____
Was a conversion performed?	☐	_____
Leak check performed and inlet pressure verified.	☐	_____
Verified proper air shutter setting for installation type.	☐	_____
Finishing Section 8		
Combustible materials not installed in non-combustible areas.	☐	_____
Verified all clearances meet installation manual requirements.	☐	_____
Mantels and wall projections comply with installation manual requirements.	☐	_____
Appliance Setup Section 9		
All packaging and protective materials removed (inside & outside of appliance).	☐	_____
Refractories, logs, media and embers installed correctly.	☐	_____
Glass assembly and glass seal plate installed and secured.	☐	_____
Accessories installed properly.	☐	_____
Surround and decorative barrier front properly installed. See instructions shipped with decorative barrier front.	☐	_____
Manual bag and all of its contents are removed from inside/under the appliance and given to party responsible for use and operation.	☐	_____
Fireplace warning plate is attached to the existing woodburning fireplace.	☐	_____
Remote control is programmed, functions verified using remote control instructions.	☐	_____
Started appliance and verified no gas leaks exist.	☐	_____

Hearth & Home Technologies recommends the following:

- Photographing the installation and copying this checklist for your file.
- That this checklist remain visible at all times on the appliance until the installation is complete.

Comments: Further description of the issues, who is responsible (Installer/ Builder/ Other Trades, etc) and corrective action needed

_____

_____

Comments Communicated to party responsible _____ by _____ on _____
(Builder / Gen. Contractor/) (Installer) (Date)

➔ = Contains updated information.

1 Product Specific and Important Safety Information

A. Appliance Certification

MODELS: **RUBYP30IN, RUBYP30IL, RUBYP30IN-BIR**
LABORATORY: **Underwriters Laboratories, Inc. (UL)**
TYPE: **Direct Vent Heater**
STANDARD: **ANSI Z21.88-2019 CSA 2.33-2019**

This product is listed to ANSI standards for "Vented Gas Fireplace Heaters" and applicable sections of "Gas Burning Heating Appliances for Manufactured Homes and Recreational Vehicles", and "Gas Fired Appliances for Use at High Altitudes".

NOTICE: *This installation must conform with local codes. In the absence of local codes you must comply with the National Fuel Gas Code, ANSI Z223.1-latest edition in the U.S.A. and the CAN/CGA B149 Installation Codes in Canada.*

NOT INTENDED FOR USE AS A PRIMARY HEAT SOURCE. This appliance is tested and approved as either supplemental room heat or as a decorative appliance. It should not be factored as primary heat in residential heating calculations.

B. Glass Specifications

This appliance is equipped with ceramic glass. Replace glass only with ceramic glass. Please contact your dealer for replacement glass.

C. BTU Specifications

Models *(U.S. or Canada)*	Elevation *(U.S. or Canada)*	Maximum Input BTU/h	Minimum Input BTU/h	Orifice Size (DMS)
RUBYP30IN RUBYP30IN-BIR (NG)	*(0-2000 FT)*	27,000	18,900	#40
RUBYP30IN RUBYP30IN-BIR (PROPANE)	*(0-2000 FT)*	25,000	17,500	#53
RUBYP30IL (PROPANE)	*(0-2000 FT)*	25,000	17,500	#53

D. High Altitude Installations

NOTICE: *If the heating value of the gas has been reduced, these rules do not apply. Check with your local gas utility or authorities having jurisdiction.*

When installing above 2000 feet elevation:

- In the USA: Reduce input rate 4% for each 1000 feet above 2000 feet.
- In CANADA: Input ratings are certified without a eduction of input rate for elevations up to 4500 feet (1370 m) above sea level. Please consult provincial and/or local authorities having jurisdiction for installations at elevations above 4500 feet (1370 m).

Check with your local gas utility to determine proper orifice size.

E. Non-Combustible Materials Specification

Material which will not ignite and burn. Such materials are those consisting entirely of steel, iron, brick, tile, concrete, slate, glass or plasters, or any combination thereof.

Materials that are reported as passing **ASTM E 136, Standard Test Method for Behavior of Materials in a Vertical Tube Furnace at 750 ºC** shall be considered non-combustible materials.

F. Combustible Materials Specification

Materials made of or surfaced with wood, compressed paper, plant fibers, plastics, or other material that can ignite and burn, whether flame proofed or not, or plastered or unplastered shall be considered combustible materials.

G. Electrical Codes

NOTICE: *This appliance must be electrically wired and grounded in accordance with local codes or, in the absence of local codes, with* **National Electric Code ANSI/NFPA 70-latest edition** *or the* **Canadian Electric Code CSA C22.1.**

- A 110-120 VAC circuit for this product must be protected with ground-fault circuit-interrupter protection, in compliance with the applicable electrical codes, when it is installed in locations such as in bathrooms or near sinks.

H. California

WARNING: This product and the fuels used to operate this product (liquid propane or natural gas), and the products of combustion of such fuels, can expose you to chemicals including benzene, which is known to the State of California to cause cancer and reproductive harm. For more information go to: www.P65Warnings.ca.gov.

2 Getting Started

A. Design and Installation Considerations

WARNING! Risk of Fire or Explosion! *Read all instructions before starting the installation*

Gas inserts are designed for installations into solid fuel masonry or UL127 listed factory built fireplaces. No additional outside air source is required.

Installation MUST comply with local, regional, state and national codes and regulations. Consult insurance carrier, local building inspector, fire officials or authorities having jurisdiction over restrictions, installation inspection and permits.

Prior to installing the gas insert:

- Ensure chimney is constructed of non-combustible materials.
- Ensure chimney is clean and in good working order.
- Ensure that all chimney cleanouts fit properly to prevent air leakage into chimney.
- Ensure combustible mantel and surround clearances comply with insert requirements.
- Ensure all joints are properly engaged and the chimney is properly secured.
- Determine minimum fireplace size. See Section 3.A and 3.C.
- Determine gas supply piping requirements.
- Determine electrical wiring requirements.
- Determine finishing details.
- Determine whether optional accessories—devices such as a wall switch or remote control—are desired.

Installation and service of this appliance should be performed by qualified personnel. Hearth & Home Technologies recommends HHT Factory Trained or NFI certified professionals.

hearthED FACTORY TRAINING Fuel Your Fire

NFI NATIONAL FIREPLACE INSTITUTE A CERTIFICATION AGENCY

Improper installation, adjustment, alteration, service or maintenance can cause injury or property damage. For assistance or additional information, consult a qualified service technician, service agency or your dealer.

Multi-Purpose Tool

- See Figure 2.1 for multi-purpose tool functions and features.
- See Figure 2.2 for multi-purpose tool shipping location.
- See Figure 2.3 for multi-purpose tool storage location options.
- Remove multi-purpose tool by cutting and discarding zip-tie.

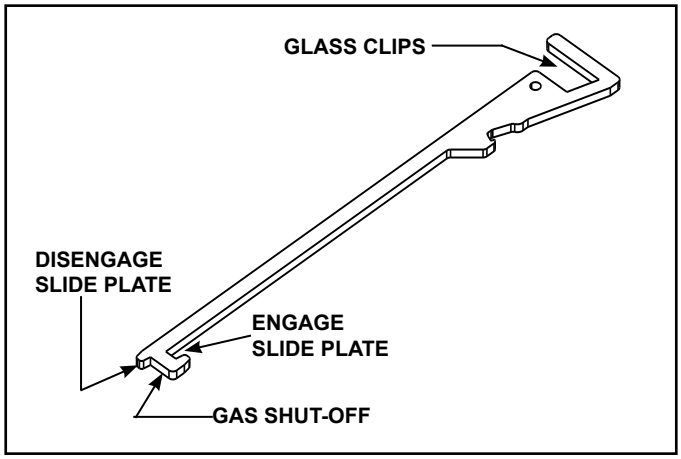

Figure 2.1 Multi-Purpose Tool

Multi-Purpose Tool - Shipping Location

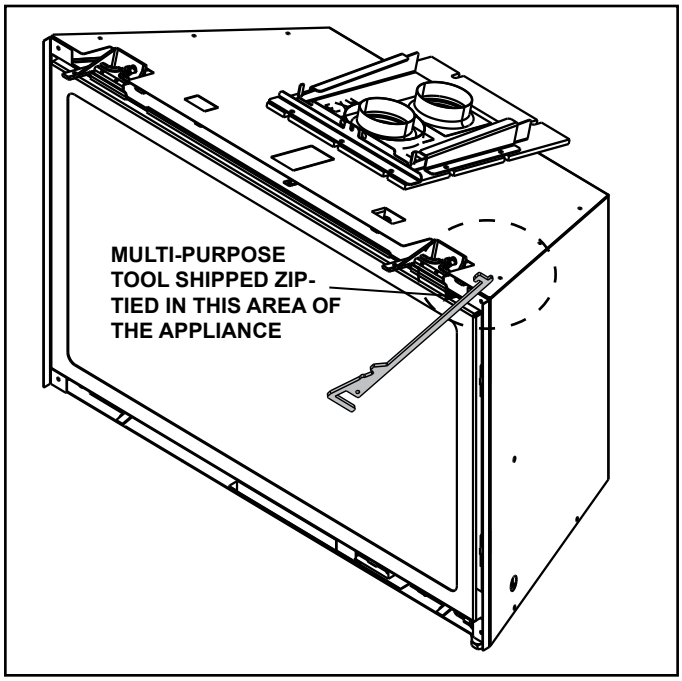

Figure 2.2 Multi-Purpose Tool shipping Location

Multi-Purpose Tool - Storage Options

OPTION A
Multi-purpose tool can be stored behind the decorative barrier front.

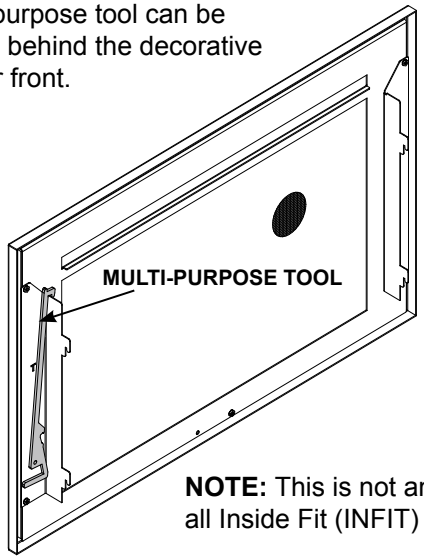

NOTE: This is not an option for all Inside Fit (INFIT) fronts.

OPTION B
Multi-purpose tool can be stored behind the surround.

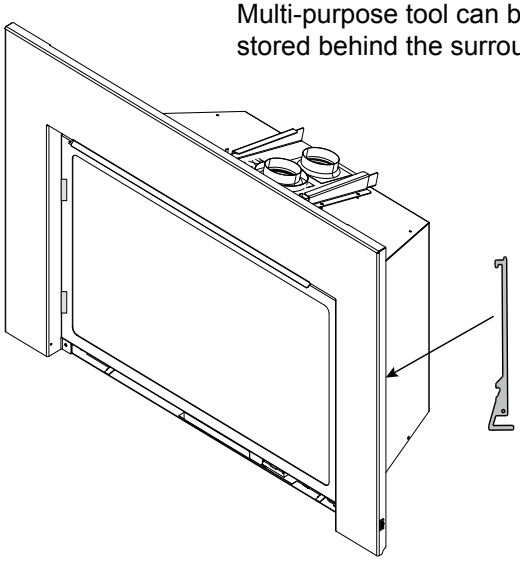

OPTION C
Multi-purpose tool can be stored in appliance manual bag.

Figure 2.3 Multi-Purpose Tool Storage Options

DO NOT store appliance manual bag in or around the appliance.

B. Good Faith Wall Surface

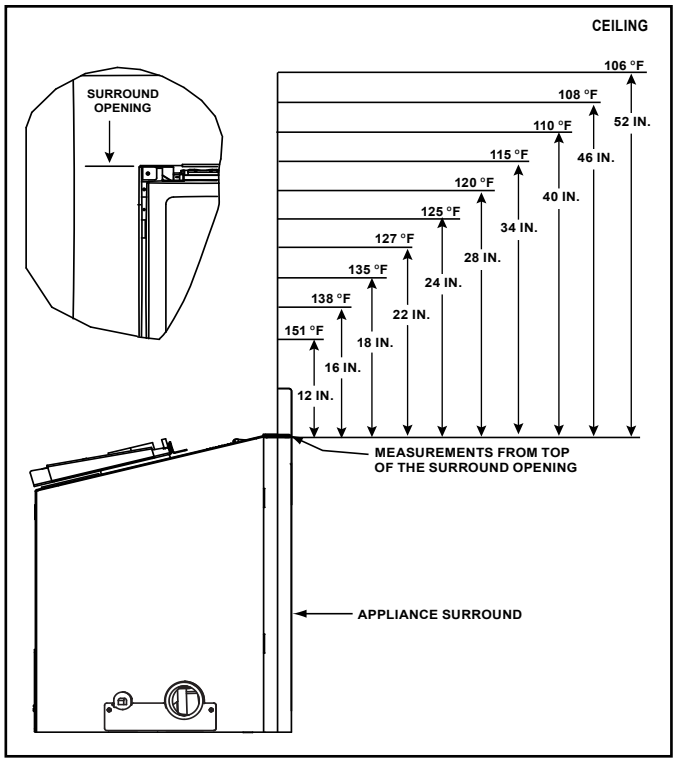

Figure 2.4 Good Faith Wall Surface Temperatures Above Appliance

If installing a television (TV) above the appliance, see Figure 2.5.

NOTICE: *Temperatures listed above are taken with a temperature measuring probe as prescribed by the test standard used for appliance certification. Temperatures on walls or mantels taken with an infrared thermometer may yield increased temperatures of up to 30 ºF or more depending on the thermometer settings and material characteristics being measured. Use appropriate finishing materials that are able to withstand these conditions. For additional finishing guidelines, see Section 8.*

Good Faith Guidelines for TV Installations above a Gas Fireplace

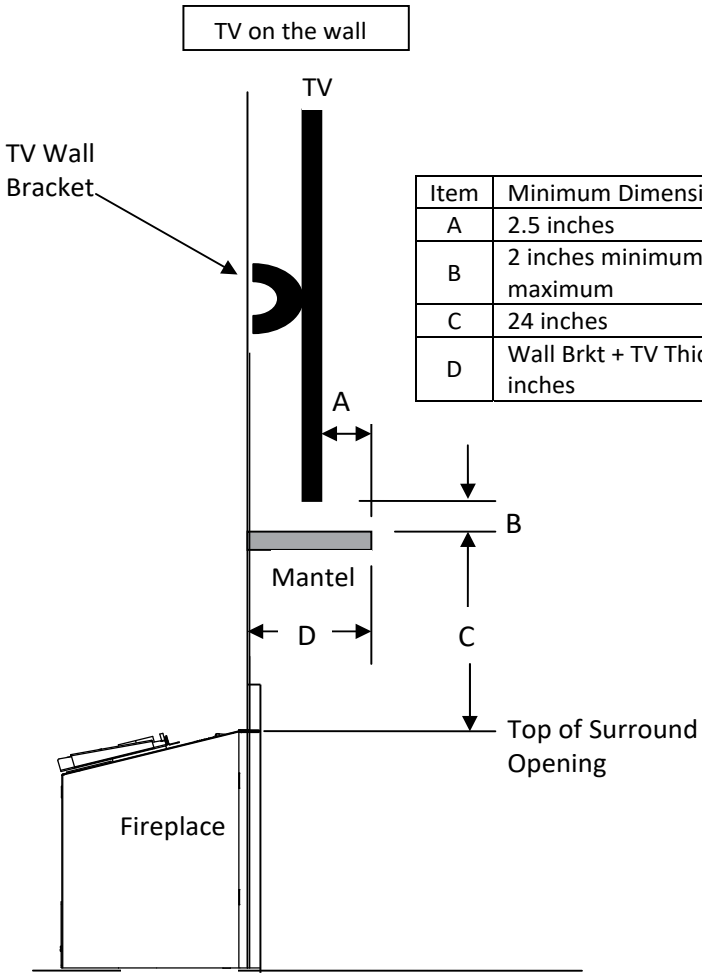

Item	Minimum Dimensions
A	2.5 inches
B	2 inches minimum to 3 inches maximum
C	24 inches
D	Wall Brkt + TV Thickness + 2.5 inches

Notes:

1. These are good faith recommended clearances only and not a guarantee of compliance with all TV manufacturers' maximum allowable operating temperatures.
2. Since every home has unique air flow characteristics and maximum allowable operating temperatures can vary from manufacturer to manufacturer and from model to model, actual TV temperatures should be validated at the time of each installation. TVs should not be used in situations where the actual TV temperature exceeds the manufacturers' maximum allowable operating temperatures identified in the TV's technical specifications. Contact the TV's manufacturer directly if you cannot locate this information or have questions regarding the information.
3. Mantel height and depth must conform to mantle requirements specified in the fireplace installation manual.
4. "C" dimension taken from the top of the hood or surround opening.
5. Suggestions on how to further reduce TV temperatures:
    a. Increase "A" dimension.
    b. Increase "C" dimension, however, increasing "B" dimension beyond maximum recommended typically results in higher temperatures.

Figure 2.5 Good Faith TV Guidelines

C. Tools and Supplies Needed

Before beginning the installation be sure that the following tools and building supplies are available.

Tape measure	Pliers
Hammer	Phillips screwdriver
Voltmeter	Electric drill and bits (1/4 in.)
Gloves	Safety glasses
Level	Reciprocating saw
Manometer	Flat blade screwdriver

Stove cement / Aluminum foil tape

3/16 in. Allen wrench (Rear Leveling Legs)

Elongated pressure taps (Recommended)

Noncorrosive leak check solution

Caulking material (300 ºF minimum continuous exposure rating)

D. Inspect Appliance and Components

- Carefully remove the appliance and components from the packaging.
- The vent system components, decorative barrier fronts and surrounds are shipped in separate packages.
- If packaged separately, the log set.
- Report to your dealer any parts damaged in shipment, particularly the condition of the glass.
- **Read all of the instructions before starting the installation. Follow these instructions carefully during the installation to ensure maximum safety and benefit.**

WARNING! Risk of Fire or Explosion! *Damaged parts could impair safe operation.* ***DO NOT*** *install damaged, incomplete or substitute components. Keep appliance dry.*

Hearth & Home Technologies disclaims any responsibility for, and the warranty will be voided by, the following actions:

- Installation and use of any damaged appliance or vent system component.
- Modification of the appliance or vent system.
- Installation other than as instructed by Hearth & Home Technologies.
- Improper positioning of the gas logs or the glass assembly
- Installation and/or use of any component part not approved by Hearth & Home Technologies.

Any such action may cause a fire hazard.

WARNING! Risk of Fire, Explosion or Electric Shock! ***DO NOT*** *use this appliance if any part has been under water. Call a qualified service technician to inspect the appliance and to replace any part of the control system and/or gas control which has been under water.*

3 Appliance / Fireplace Requirements and Clearances

A. Appliance Weights and Dimensions

Dimensions are actual appliance dimensions. Use for reference only. For additional clearances refer to Sections 3.D and 3.E.

Appliance Weight Table

Model	Pounds	Kilograms
RUBYP30IN RUBYP30IL RUBYP30IN-BIR	97	44

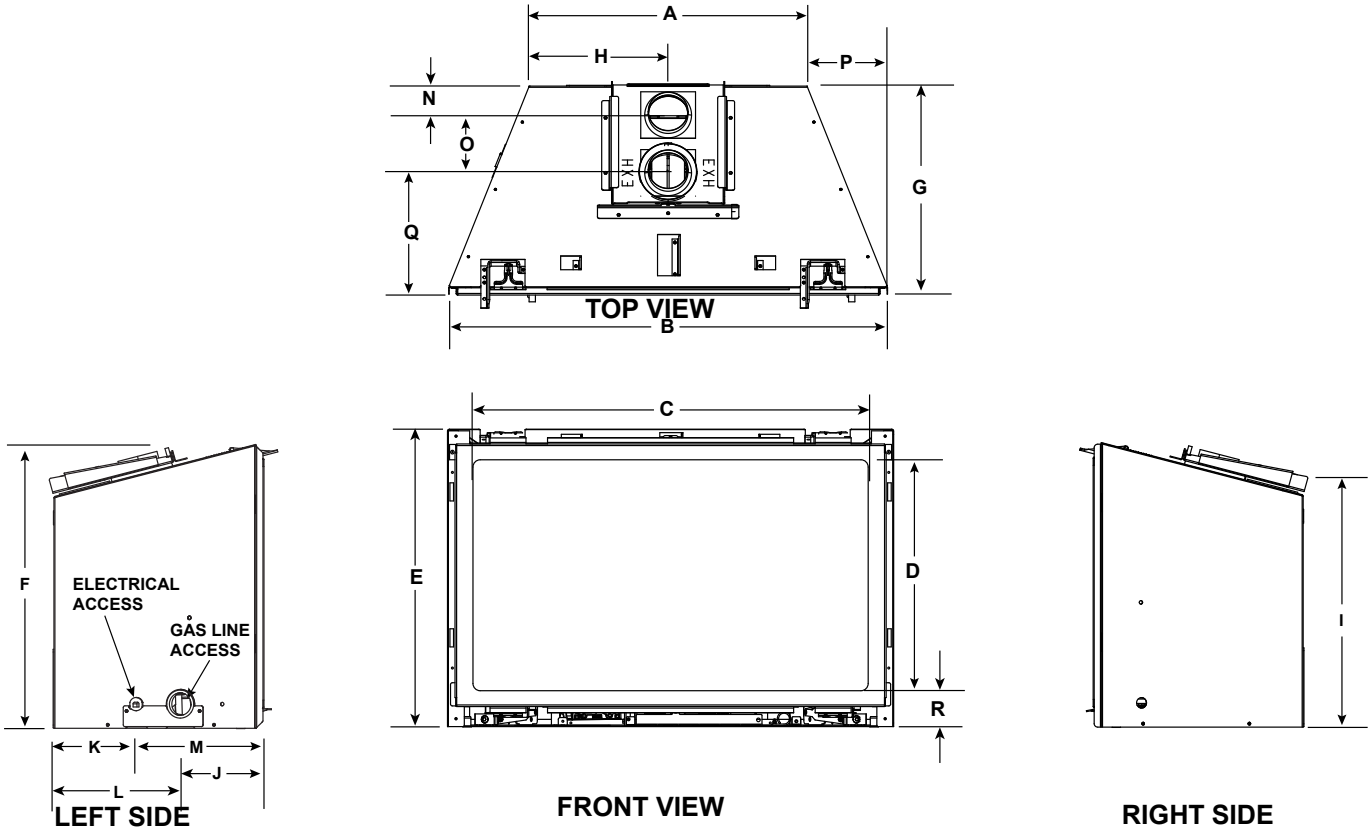

MODEL DIMENSIONS		
Location	30 in.	
	IN	MM
A	19-5/8	499
B	31-1/8	791
C	27-1/4	692
D	15-11/16	399
E	20-3/4	527
F	20-1/8	511
G*	14-1/2	369
H	9-13/16	249
I	18-15/16	481

MODEL DIMENSIONS		
Location	30 in.	
	IN	MM
J	5-11/16	144
K	5-7/8	149
L	9	229
M	8-3/4	222
N	2-1/8	54
O	4-1/16	103
P	5-3/4	146
Q	8-3/4	222
R	2-7/16	62

***Note:** Location G is the appliance depth measurement, for installation depth reference Location E on Figure 3.8.

Figure 3.1 Appliance Dimensions

B. Decorative Barrier Front Dimension Diagrams

DECORATIVE BARRIER FRONTS - INSIDE FIT

IMPORTANT! This fireplace requires an installed decorative barrier front to prevent direct contact with the hot viewing glass. DO NOT operate the fireplace with the barrier removed.

Decorative barrier front must be ordered at time of fireplace purchase. If decorative barrier front is not present, contact dealer.

* ***NOTICE:*** *1/2 inch gap must be maintained or components will overheat.*

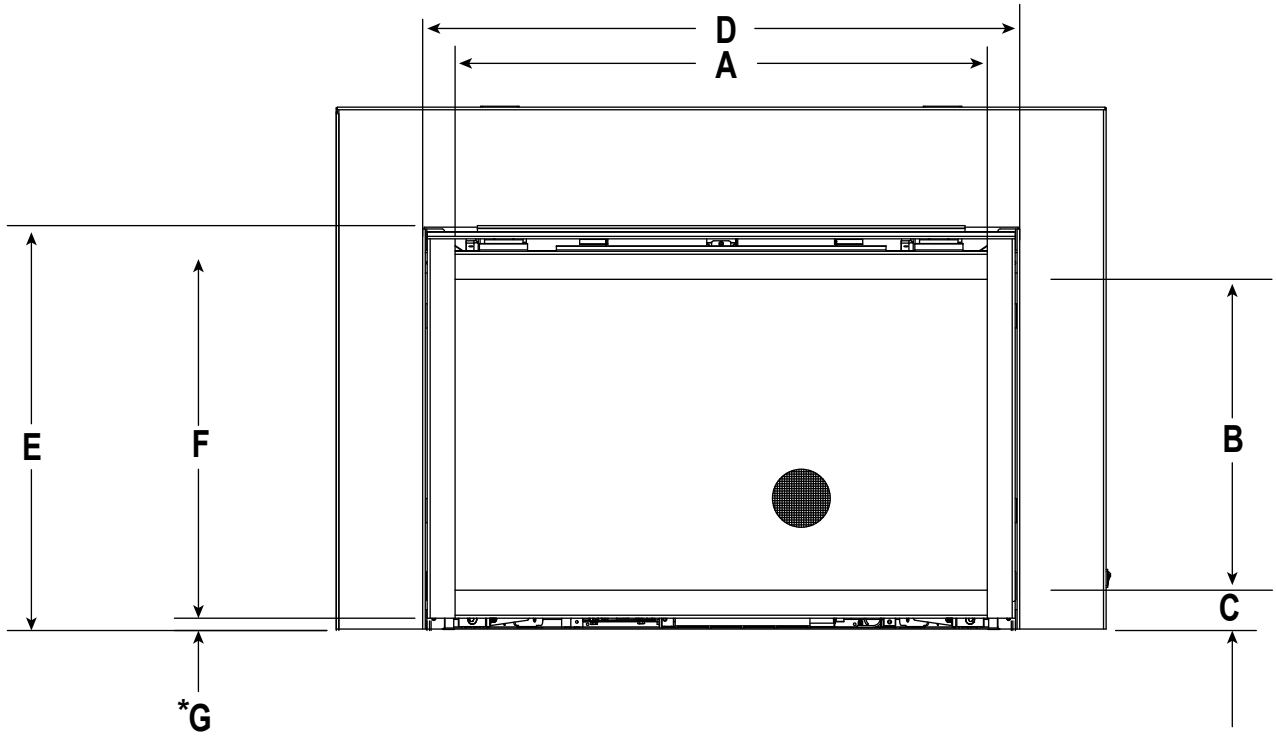

			A	B	C	D	E	F	G
RUBYP30IN RUBYP30IL RUBYP30IN-BIR	INFIT-30	in.	27-5/8	16-1/16	1-7/8	30-5/8	20-1/2	20	1/2
		mm	702	408	48	778	521	508	13

Figure 3.2 Decorative Barrier Front Dimensions - Inside Fit

DECORATIVE BARRIER FRONTS - CLEAN SCREEN

* ***NOTICE:*** *1/2 inch gap must be maintained or components will overheat.*

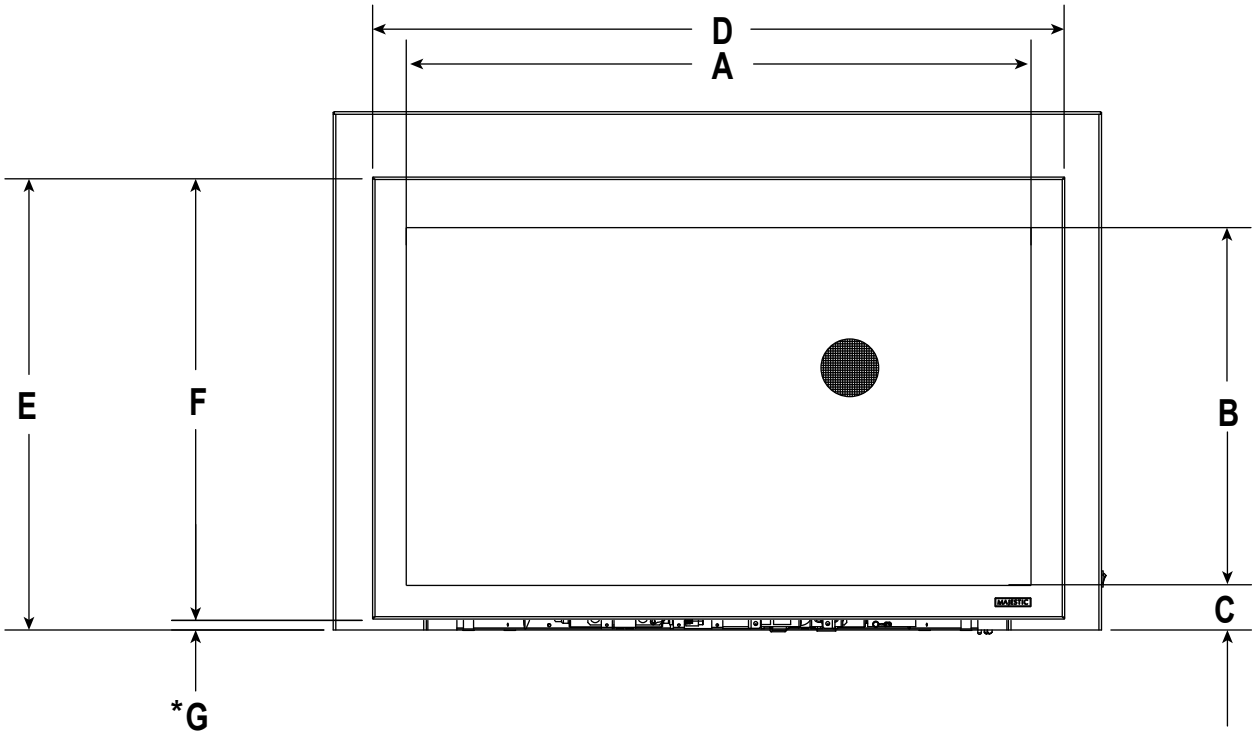

			A	B	C	D	E	F	G
RUBYP30IN RUBYP30IL RUBYP30IN-BIR	CSFI30	in.	32-3/8	18-5/8	3-1/8	36	23-1/2	23	1/2
		mm	822	473	79	914	597	584	13

Figure 3.3 Decorative Barrier Front Dimensions - Clean Screen

DECORATIVE BARRIER FRONTS - CONTEMPORARY ARCH

* ***NOTICE:*** *1/2 inch gap must be maintained or components will overheat.*

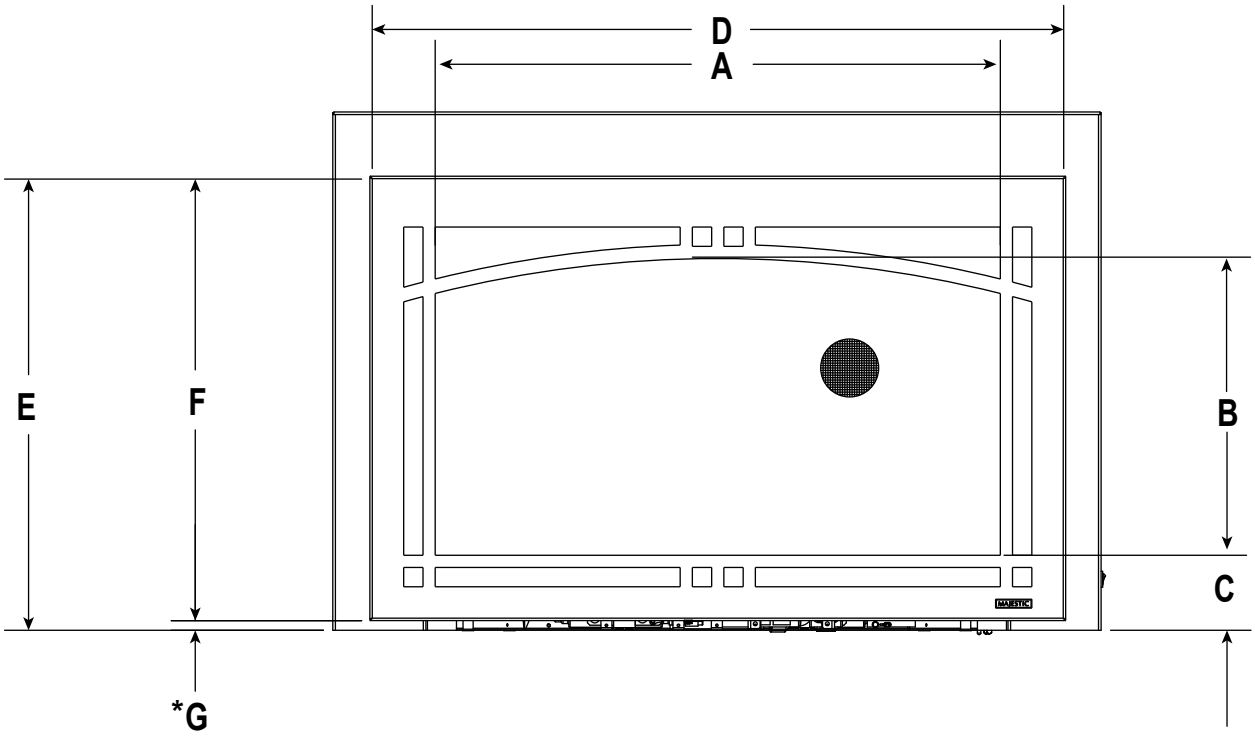

			A	B	C	D	E	F	G
RUBYP30IN RUBYP30IL RUBYP30IN-BIR	CASFI30	in.	29-1/16	15-3/8	3-7/8	36	23-1/2	23	1/2
		mm	738	391	98	914	597	584	13

Figure 3.4 Decorative Barrier Front Dimensions - Contemporary Arch

C. Minimum Fireplace Opening

Minimum firebox opening requirements for a standard 7/8 inch deep surround are shown in Figure 3.8. For smaller openings, a custom surround is available.

WARNING! Risk of Fire or Burns! *Provide adequate clearance around air openings and for service access.* ***Due to high temperatures, the appliance should be located out of traffic and away from furniture and draperies.***

For Installation into a Zero Clearance Wood burning fireplace:

- The brick (refractory), glass assembly, screen rails, screen mesh and log grates can be removed from a factory built firebox in order to gain minimum gas insert opening requirements.
- Any smoke shelves, shields and baffles may be removed from the factory built firebox if attached with mechanical fasteners.

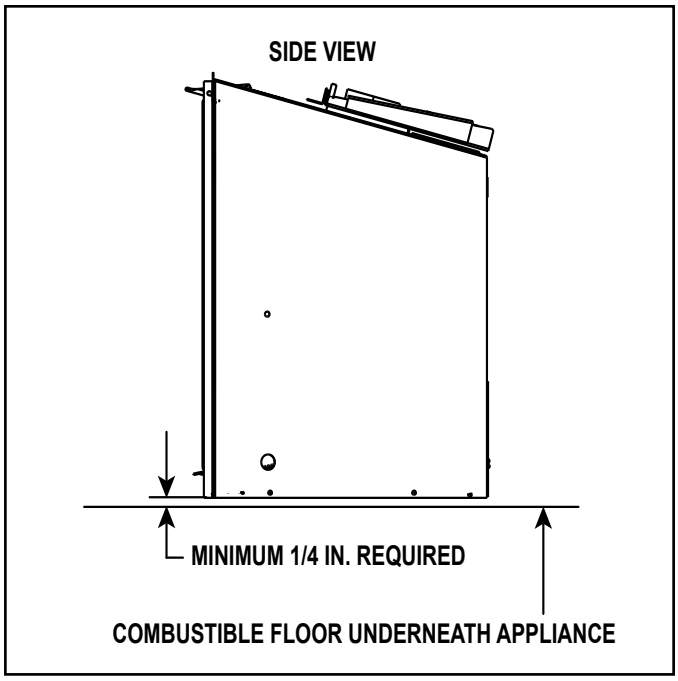

Figure 3.5 Solid Fuel Floor Clearance

- The appliance may not be placed directly on the base of the outer wrap, a 1/4 inch airspace **MUST** be provided between the insert and the combustible floor underneath the appliance. Use the leveling legs to raise the insert a minimum of 1/4 inch. The original fireplace may never be returned to solid fuel in this condition. The sidewalls and top structure of the firebox may not be altered with the exception of removable baffles and dampers.
- The metal floor of the solid fuel firebox may be removed to facilitate the installation of the insert.
- A metal lip protruding above the hearth pad of the solid fuel firebox may be removed. See Figure 3.6.

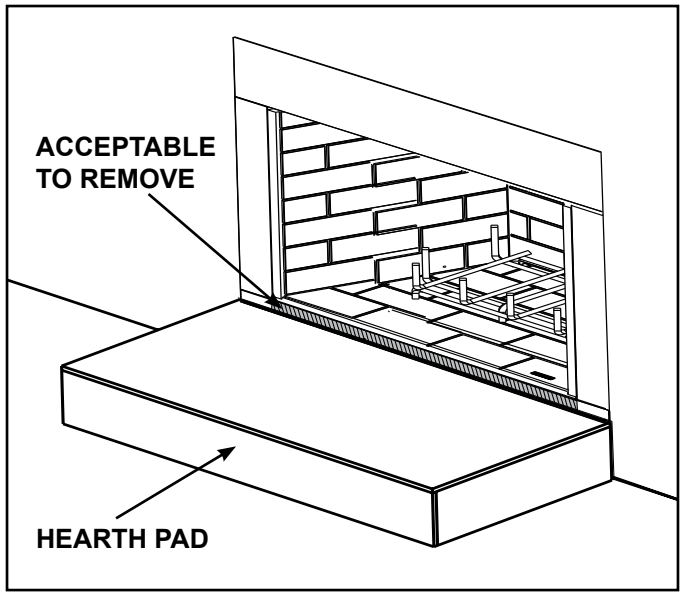

Figure 3.6 Solid Fuel Firebox

- Cutting of any sheet metal parts of the fireplace in which the gas fireplace insert is to be installed is prohibited, except the floor and front lip as tested for and as noted above. See Section 4.C for gas line exception.
- A minimum 1/4 inch gap from the bottom of the appliance to the metal floor of the solid fuel firebox is **REQUIRED.** See side view in Figure 3.5.
- Manufactured gas inserts can be installed as a zero clearance wall extension appliance. See Section 3.C for clearance detail.

NOTICE: *1/2 inch gap must be maintained or components will overheat.*

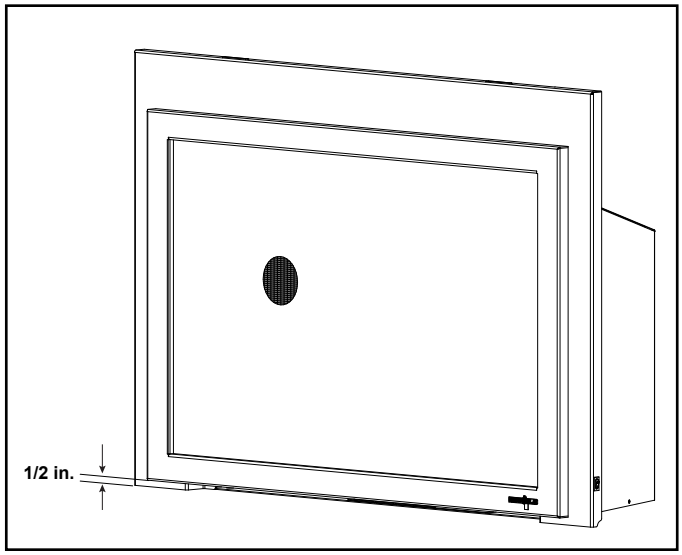

Figure 3.7 Minimum Required 1/2 in. Gap

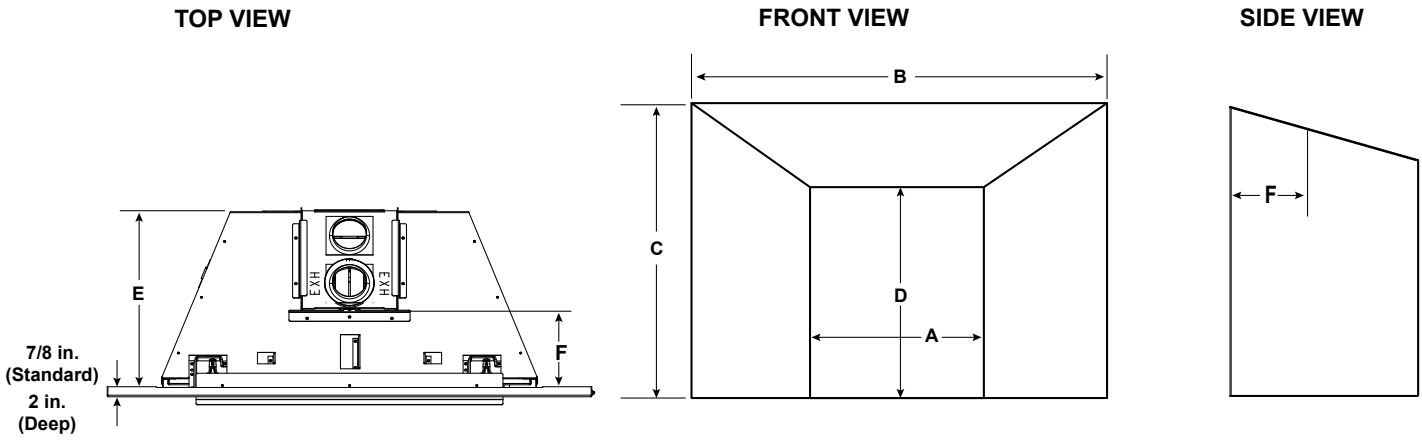

STANDARD SURROUND MINIMUM FIREBOX OPENING			
Location		30 inch	
		Inches	Millimeters
A	Opening Width - Rear	20-1/8	511
B	Opening Width - Front	31-5/8	803
C	Opening Height - Front	21	533
D	Opening Height - Rear	19-3/16	487
E*	Appliance Opening Depth	15	381
F	Venting Depth - Front	7-5/8	194

Note: Dimensions assume 1/4 inch clearance on all sides.
Note: If exhaust collar on insert and fireplace damper do not line up, add 4 inches (102 mm) to minimum fireplace height for bends in vent pipe.

2 INCH DEEP SURROUND MINIMUM FIREBOX OPENING			
Location		30 inch	
		Inches	Millimeters
B	Alternate Opening Width - Front	31	787
C	Alternate Opening Height - Front	21	533
E	Alternate Appliance Opening Depth	14	356

Note: 2 inch deep surrounds, in medium size black finish have been created as standard accessory.
Sku Names: MI30-4230D-BK

*Appliance depth is measured to the back of the surround to give the depth needed for installation.
In addition to these dimensions, also reference Section 3.D and 3.E.

Figure 3.8 Firebox Opening - Standard and Deep Surrounds

Custom Surrounds

Custom surrounds are available. See your dealer for information. Standard surrounds are 7/8 inches deep. Custom surrounds are available up to 3 inches deep. A 3 inch deep surround would reduce the appliance opening depth **(E*)** by 2-1/8 inches (3 in. - 7/8 in. = 2-1/8 in).

On Site Custom Surrounds

On site custom surrounds are available. See your dealer for information. On site custom surrounds are flush and have no depth. A flush surround would increase the appliance opening depth **(E*)** by 7/8 inch.

D. Zero Clearance Wall Extension

Surrounds MUST overlap wall extension.

Section 3.D only refers to applications where a zero clearance wall extension is used.

A non-combustible wall extension can be used to cover an existing masonry surface. Wall extensions are typically used to improve cosmetics.

WARNING! Risk of Fire! *Comply with all minimum clearances to combustibles as specified. Framing or finishing material closer than the minimums listed must be constructed entirely of noncombustible materials (i.e., steel studs, concrete board, etc).*

Combustible facings must not extend behind the insert surround. See Section 1.E and 1.F.

Non-Combustible Materials Specification

Material which will not ignite and burn. Such materials are those consisting entirely of steel, iron, brick, tile, concrete, slate, glass or plasters, or any combination thereof.

Materials that are reported as passing **ASTM E 136, Standard Test Method for Behavior of Materials in a Vertical Tube Furnace at 750 ºC.**

MODEL	X (min)	Y (min)
RUBYP30I	33-1/2	56

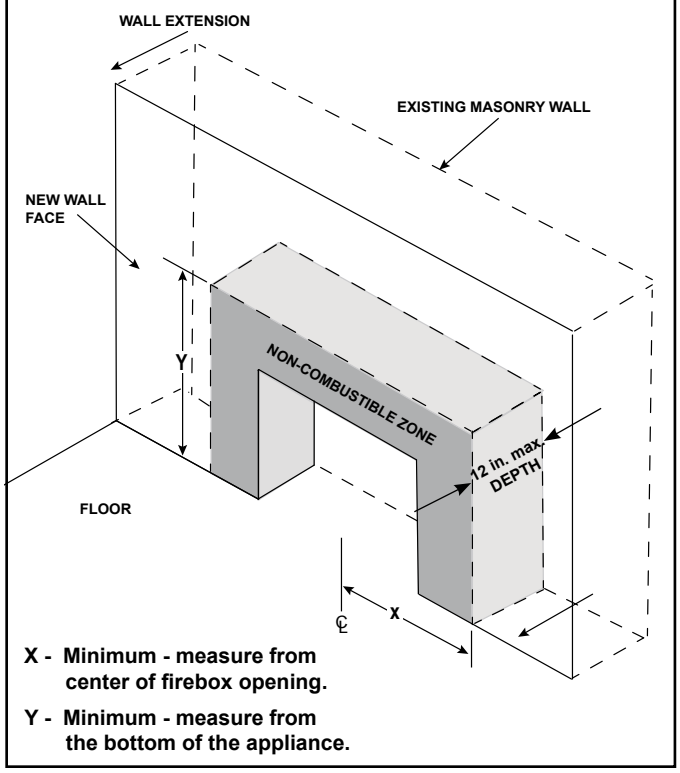

Figure 3.9 Non-Combustible Framing Requirement

MODEL	X (min)	Y (min)
RUBYP30I	33-1/2	56

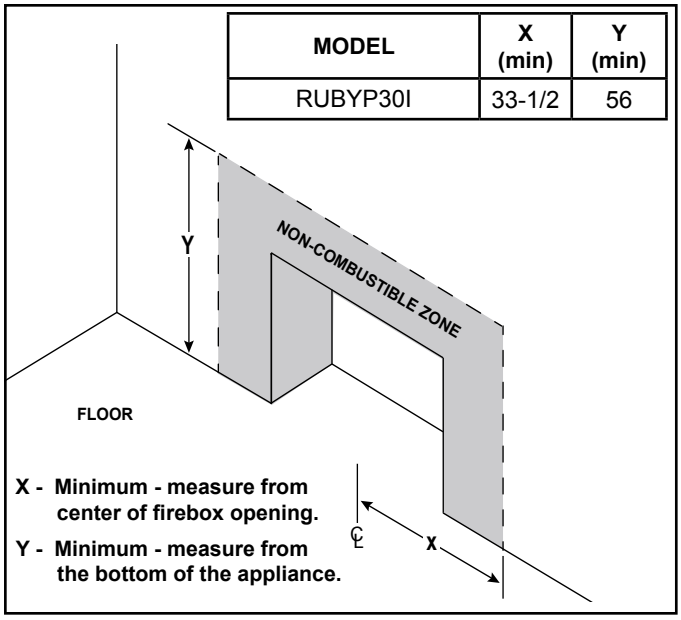

Figure 3.10 Non-Combustible Facing Requirement

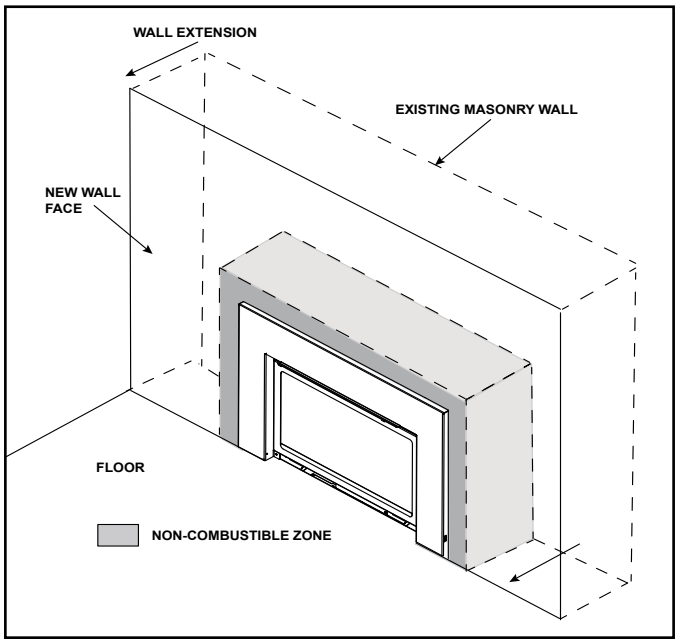

Figure 3.11 Non-Combustible Framing / Facing Requirement

- Facing and/or finishing materials must not interfere with air flow through decorative barrier fronts.
- Facing and/or finishing materials must never overhang into the glass opening.
- Observe all clearances when applying combustible materials.
- Maximum depth of wall extension is 12 inches. This may be limited by the flex pipe's ability to connect to the starting collar.
- Covering combustible materials with non-combustible materials does not qualify material as non-combustible.

WARNING! Risk of Fire! DO NOT *apply combustible materials beyond the minimum clearances. Comply with all minimum clearances to combustibles as specified in this manual. Overlapping materials could ignite and will interfere with proper operation of decorative barrier fronts.*

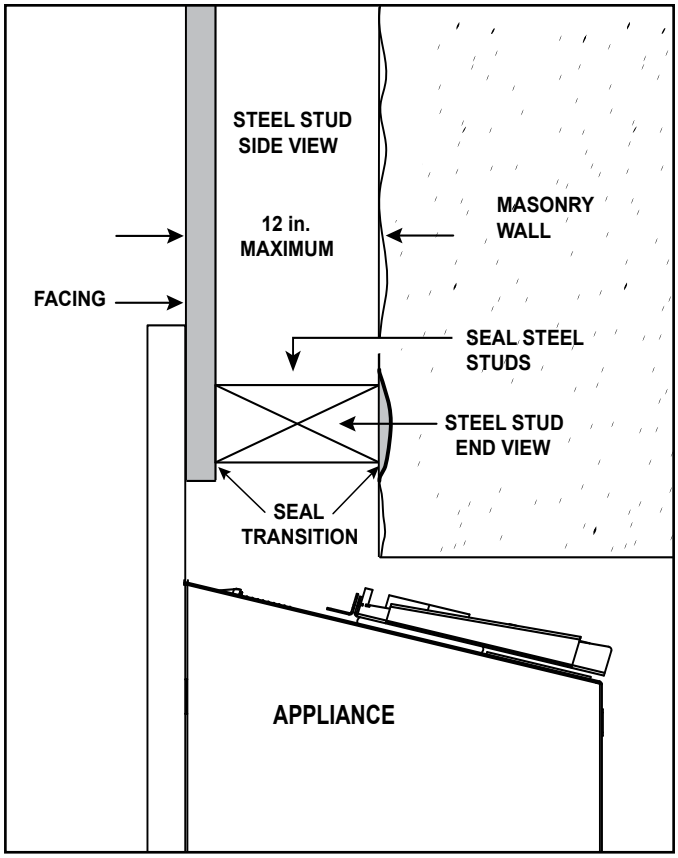

Figure 3.12 Transition Sealing Detail for Wall Extensions (Side View)

Wall Extension

Wall extension must be sealed to existing masonry wall. See Figure 3.12. Framing studs may not sit flush against existing masonry wall. In order to keep heat from escaping behind the wall this transition must be sealed. Also, slots in steel studs must be sealed.

- Seal with a high temperature silicone 300 °F.

and / or

- Packing insulation into voids between the masonry wall and steel studs is acceptable.

Note: Combustible materials may be used to seal wall extension to existing masonry wall as long as it is outside the non-combustible zone.

Painting

If desired finishing includes a painted wall, a high-quality 100% acrylic latex paint with a high-quality latex primer base coat are recommended around the appliance to limit discoloration. Oil-based or standard acrylic paints may be more prone to discoloration due to heat exposure.

Drywall Joint-Crack Prevention and Repair

Drywall joints around the fireplace will be affected by exposure to elevated temperatures, along with other environmental, structural factors due to new construction, and methods used to install and finish the drywall. If a crack does emerge adjacent to the fireplace, it can be permanently repaired by filling it with a paintable latex caulk, followed by repainting.

Some movement of the screws used to secure the non-combustible board to the appliance/surround framing is expected. If a blemish begins to show over a screw head, sand the surface to remove the blemish and repaint.

NOTE: **Concealed sections of 3 in. flex pipe must be contained inside existing masonry fireplace flue vent or installed into an existing wood burning vent system.**

E. Mantel, Wall Projections, & Hearth Extensions

WARNING! Risk of Fire! *Comply with all minimum clearances to combustibles as specified. Framing or finishing material closer than the minimums listed must be constructed entirely of noncombustible materials (i.e., steel studs, concrete board, etc).*

Clearance to combustible material under the insert is 1/4 inch (6 mm).

- *Use leveling legs to raise insert minimum 1/4 inch (6 mm) above combustible material or outer wrap of factory built firebox.*

Combustible facings must not extend behind the insert surround. For non-combustible material specifications refer to Section 1.E.

Mantel Legs or Wall Projections

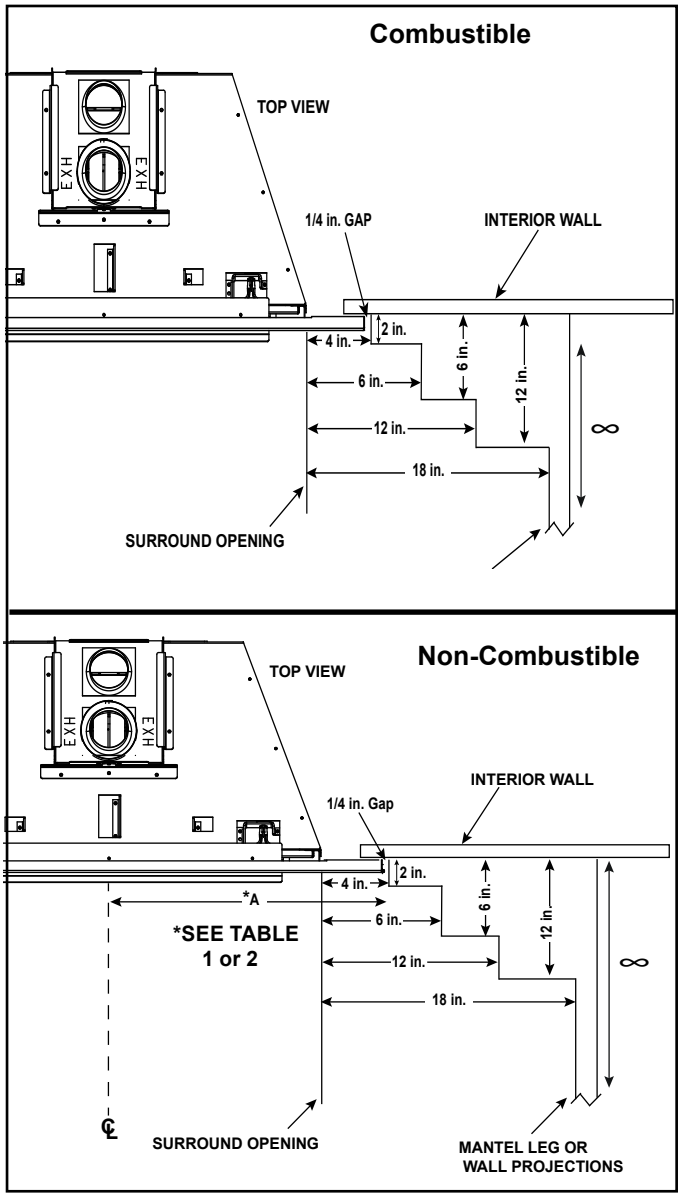

Figure 3.13 Clearances to Mantel Legs or Wall Projections (Acceptable on both sides of surround opening)

Mantels or Wall Projections - Non-Combustible

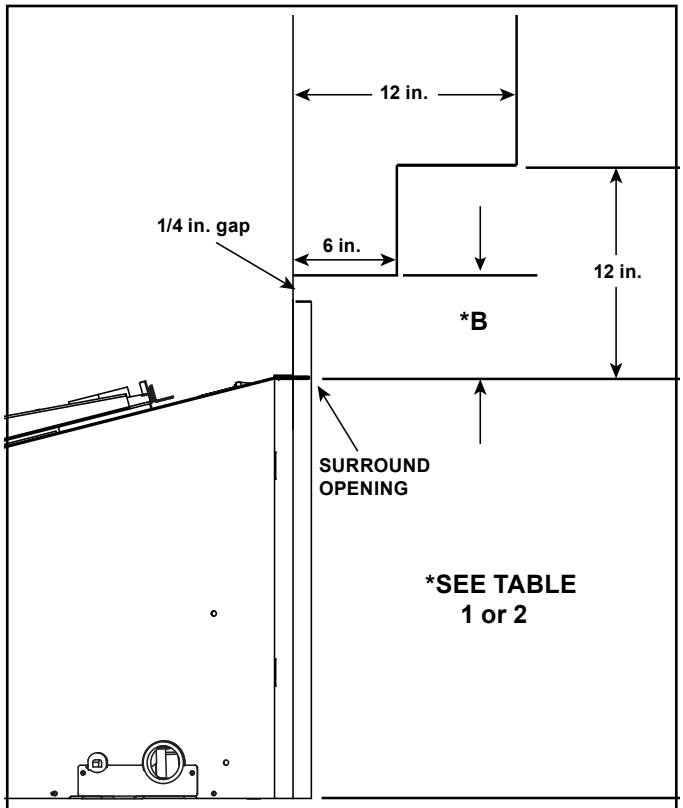

Note: Measurement is taken from top of the surround opening.

Figure 3.14 Minimum Vertical and Maximum Horizontal Dimensions- Non-Combustible

Appliance Size	Surround Model	A	B
30 in.	MI30-4027	20-7/16 in.	6-9/16 in.
	MI30-4230	21-7/16 in.	9-9/16 in.
	MI30-4432	22-7/16 in.	11-9/16 in.

Table 1 Mantel Leg or Wall Projection Minimum Dimension needed when Installing a Standard Surround

Unit Size	Front Model	A	B
30 in.	INFIT	17-1/8 in.	1-1/4 in.
	CSFI, CASFI	18-9/16 in.	2-1/2 in

Table 2 Mantel Leg or Wall Projection Minimum Dimension needed when Installing a Custom Surround. Front Model Determines the Minimum Size of the Custom Surround

Note: All numbers in Tables 1 and 2 include the 1/4 in. gap on surround edge.

Mantels - Combustible

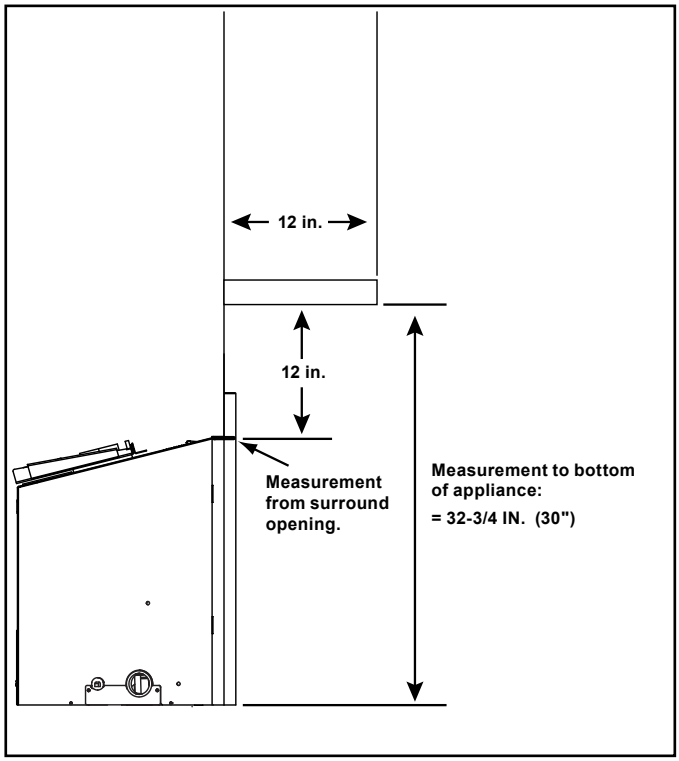

Figure 3.15 Minimum Vertical and Maximum Horizontal Dimensions - Combustible

F. Hearth Extension

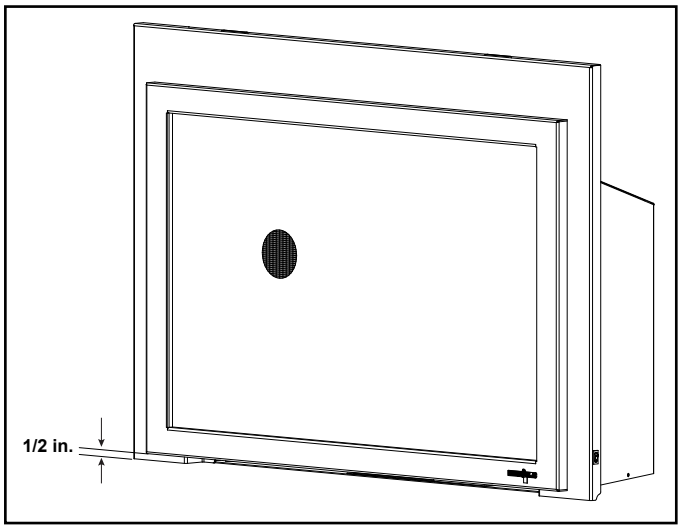

Figure 3.16 Minimum Required 1/2 in. Gap to Bottom of Front

- All flooring and hearth material must remain below the bottom of the surround. See Figure 3.17.
- Combustible flooring may be located in front of the appliance. See Figure 3.19 for vinyl flooring recommendations.
- 1/2 inch gap under the bottom of the front must be maintained. See Figure 3.16.
- A minimum 1/4 inch gap from the bottom of the appliance to the metal floor of the solid fuel firebox is **REQUIRED.** See side view in Figure 3.18.
- Combustible flooring underneath the appliance is acceptable with a 1/4 inch gap. See Figure 3.18.

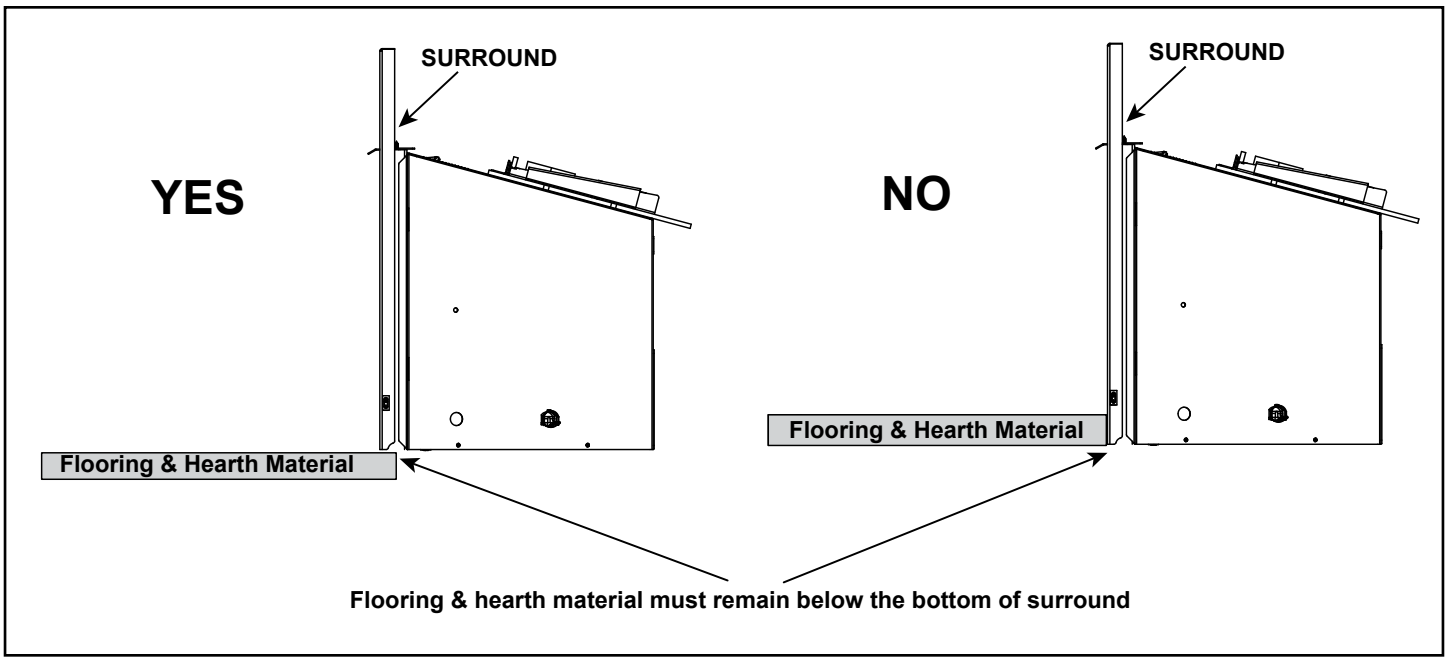

Figure 3.17 Flooring & Hearth Material

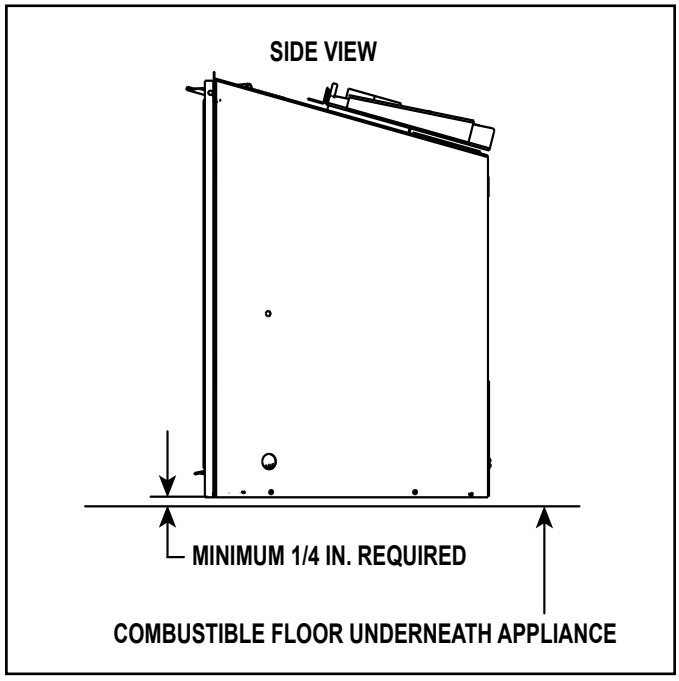

Figure 3.18 Solid Fuel Combustible Floor Clearance

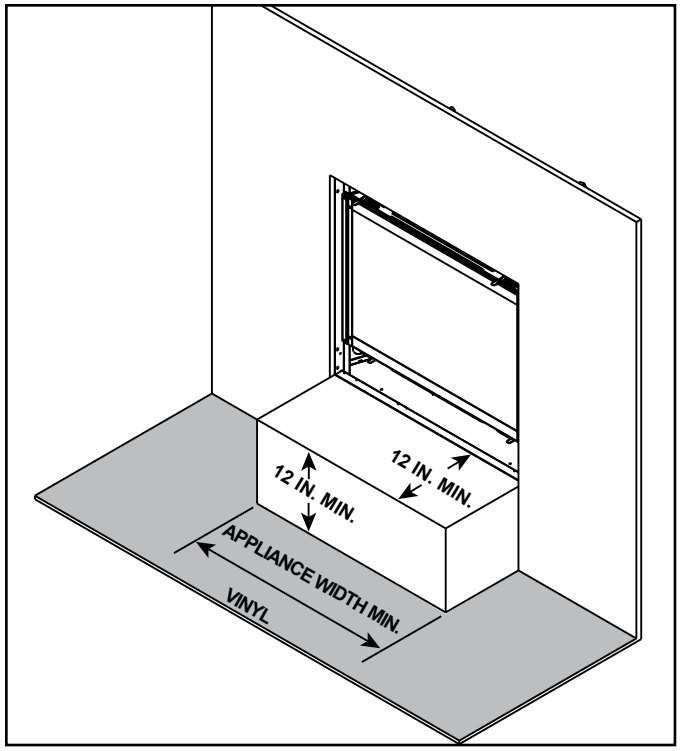

Figure 3.19 Vinyl Flooring Recommendations

Vinyl Flooring

Vinyl flooring is sensitive to heat. To avoid damage to the vinyl flooring, a 12 inch minimum x 12 inch minimum hearth is recommended when using vinyl flooring up to the wall. See Figure 3.18. If no hearth is used, it is recommended to provide a minimum of 24 inches of clearance in front of the appliance to the vinyl flooring OR the bottom of the appliance should be raised a minimum of 24 inches off of the floor to allow the vinyl flooring to be installed up to the wall. See Figure 3.20.

NOTICE: *Clearances that do not meet the minimum guidelines could result in damage or buckling to the vinyl flooring and is done at the installer's or homeowner's risk.*

Hearth and Home Technologies does not recommend adhesive based vinyl flooring products due to thermal expansion during operation. Floating style flooring can be used, but it will reach temperatures up to 110 °F (based on ambient temperature of 70 °F). Consult the manufacturer's flooring specifications to ensure compatibility.

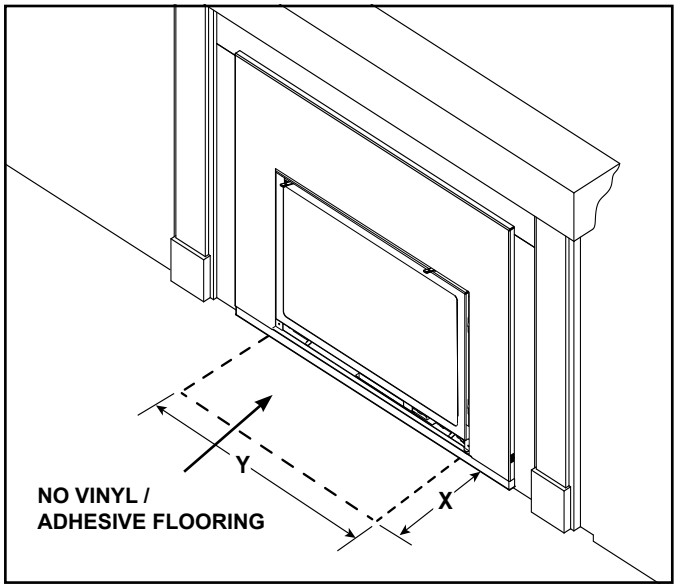

Figure 3.20 Hearth - Combustible Material Exception

Vinyl / Adhesive Flooring - Minimums

Appliance Size	Depth (X)	Width (Y)
30 in.	24 in.	30-3/4 in.

4 Installation Preparation

Prepare the existing solid fuel masonry or factory built non-combustible firebox for installation.

A. Cleaning

Prior to installing the gas insert:

- Ensure that the woodburning fireplace cavity is clean and free of ash, soot, and other debris.

B. Flue Damper

Fully lock the solid fuel fireplace's flue damper in the open position, OR completely remove it.

C. Gas Line

Note: If the factory-built fireplace has no gas access hole provided, an access hole of 1 inch (25 mm) diameter or less may be drilled through the lower sides or bottom of the firebox in a proper workmanship - like manner. This access hole must be plugged with non-combustible insulation after the gas supply line has been installed.

- If the gas access hole of the factory-built fireplace is not accessible or prohibits the installation due to its location, an access hole may be drilled through the lower side, back or bottom of firebox.
- The lower sides, back, or bottom is considered the lower half of the factory-built firebox.
- Install gas line to the factory provided flex line. See Figure 4.1.
- Check local codes and gas line sizing requirements following NFPA54. See Section 7.
- It is recommended that extra length of gas line be installed within the existing wood burner or masonry fireplace to allow removal of the insert for future servicing needs.

Figure 4.1

D. Fireplace Conversion Notice

The fireplace conversion notice is included in the appliance manual bag. Permanently attach the label with the following warning to the inside lower back of the fireplace firebox into which the insert is being installed. Silicone or mechanical fasteners may be required to properly secure the label.

WARNING! Risk of Fire! *This fireplace has been converted for use with a gas fireplace insert only and cannot be used for burning wood or solid fuels unless all original parts have been replaced, and the fireplace re-approved by the authority having jurisdiction.*

E. Electrical Outlet Box

An outlet box may be installed in a bottom back corner of the existing solid fuel masonry or factory-built fireplace to power the appliance. Each appliance ships standard with a cord assembly to permit blowers or other optional accessories to be used. The accessories plug into the new outlet box or may be routed out onto the hearth to a nearby outlet.

NOTICE: DO NOT *wire 110-120 VAC to wall switch.*

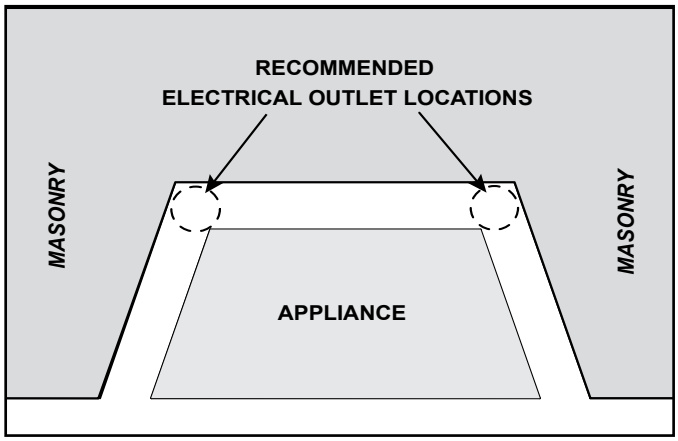

Figure 4.2 Electrical Outlet Detail

Appliance Cord Length (approximate)

Appliance Size	Left Side	Right Side
30 in.	10 ft. 3 in.	7 ft. 6 in.

5 Installing Vent Pipe and Appliance

A. Vent Limits

The abbreviations listed in this vent table key are used in the vent diagrams.

Description
Minimum Vertical Run Length 10 ft.
Maximum Vertical Run Length 50 ft.

WARNING! Risk of Fire/Explosion/Asphyxiation! *Do NOT connect this gas appliance to a chimney flue serving a separate solid fuel or gas burning appliance.*

- *Could impair safe operation of this appliance or other appliances connected to the flue.*
- *Vent this appliance directly outside.*
- *Use separate vent system for this appliance.*

CAUTION! ALL vent specifications MUST be followed. *This product is tested and listed to these specifications. Appliance performance will suffer if specifications are not followed.*

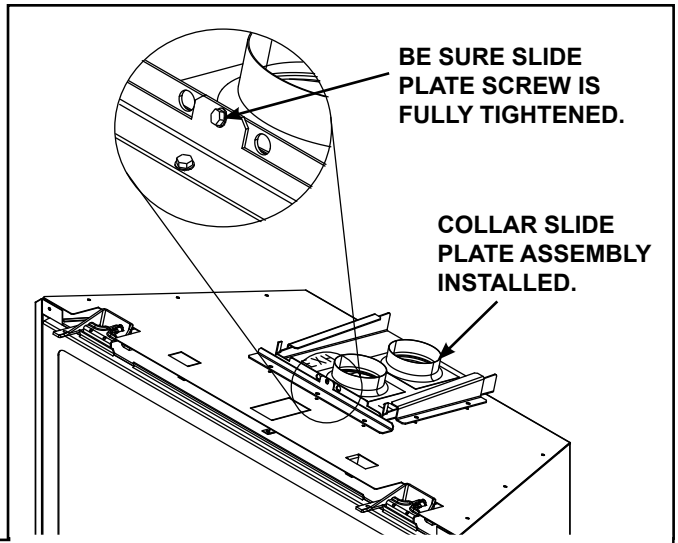

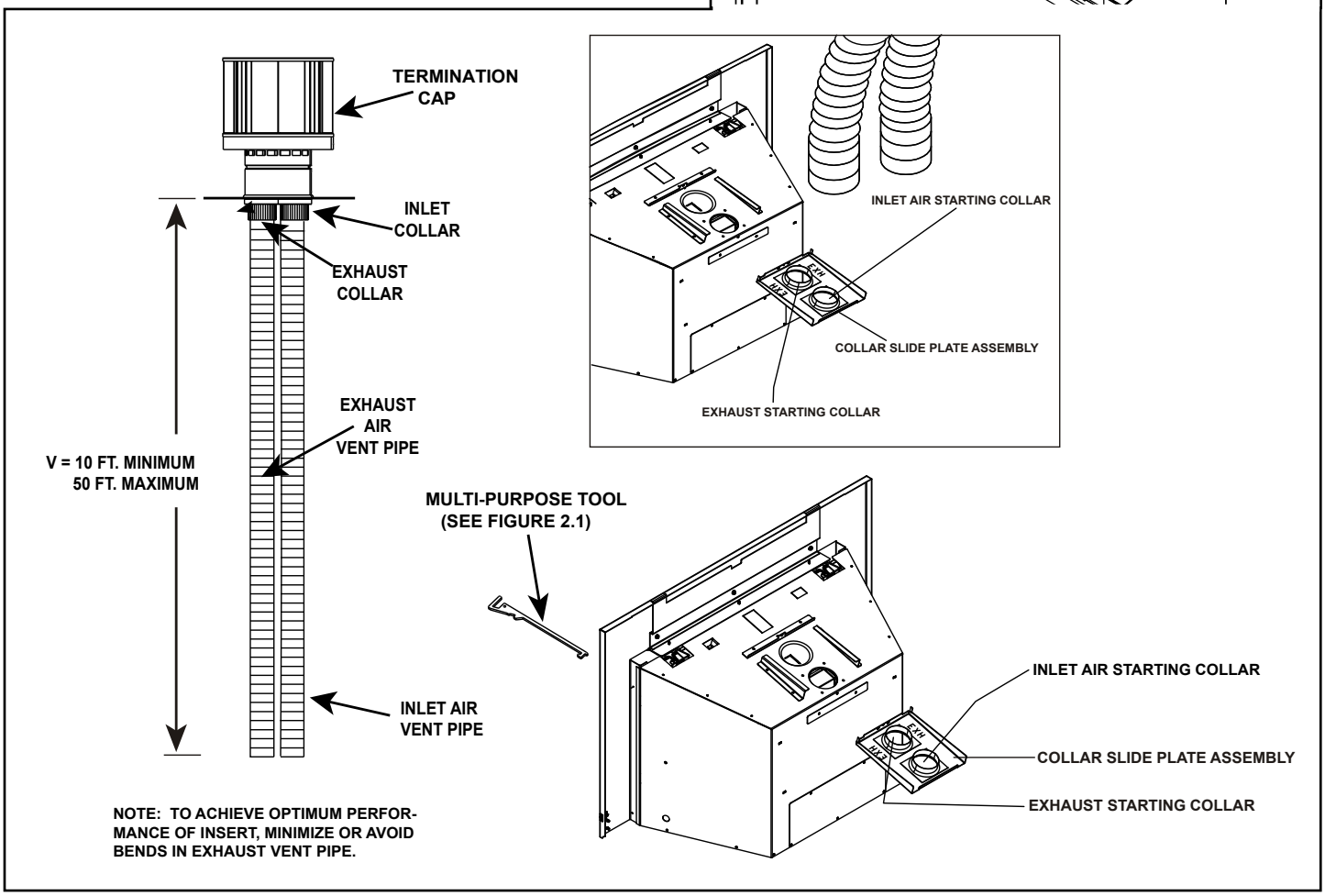

Figure 5.1

B. Using Vertical Restrictor

The restrictor doors are shipped from the factory in the open position. No adjustment is necessary. See Figure 5.2.

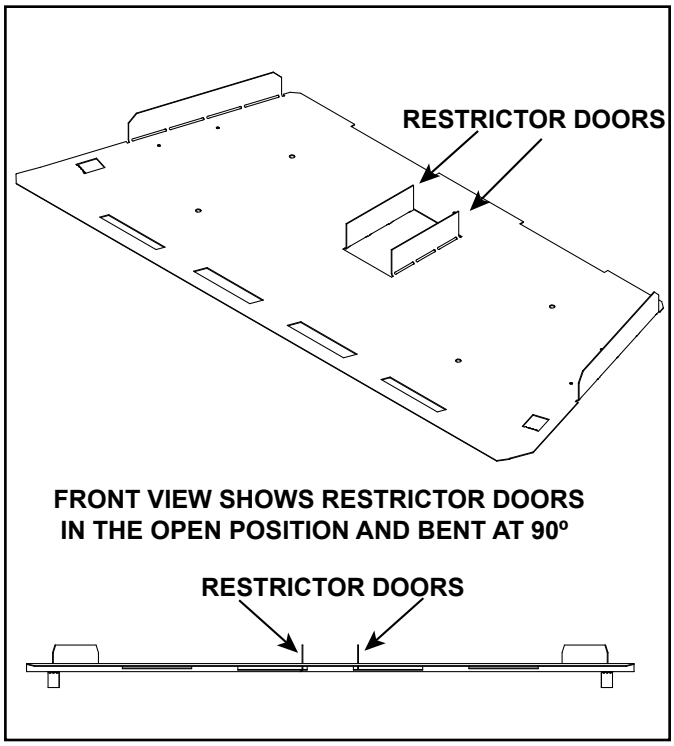

Figure 5.2 Firebox Baffle with Restrictor Doors Open

C. Venting Components

CAUTION! Risk of Cuts/Abrasions/Flying Debris. *Wear protective gloves and safety glasses during installation. Sheet metal edges are sharp.*

The vertical vent termination system installed on this model includes:

- One length of 3-inch flexible vent pipe for exhaust air (included with vent kit).
- One length of 3-inch flexible vent pipe for combustion air (included with vent kit).
- One vertical termination cap (included with vent kit).

To prevent odors and cold air drafts, it may be necessary to place non-combustible insulation or field fabricated metal plates around the vent pipe flues as they go through the damper.

Note: The LINK-DV4-30B and LINKSQ-DV4-30 systems REQUIRE this insulation.

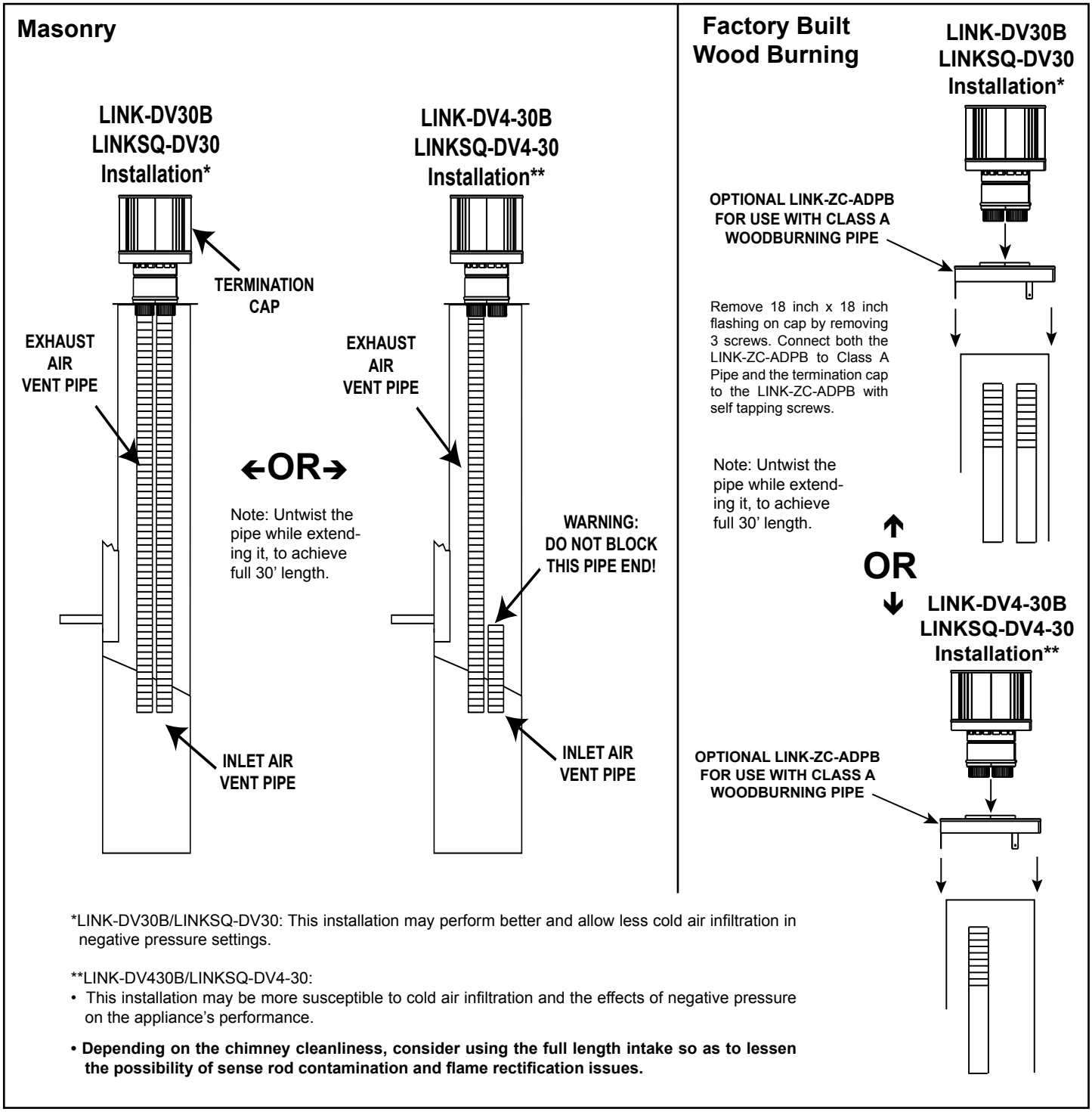

*LINK-DV30B/LINKSQ-DV30: This installation may perform better and allow less cold air infiltration in negative pressure settings.

**LINK-DV430B/LINKSQ-DV4-30:

- This installation may be more susceptible to cold air infiltration and the effects of negative pressure on the appliance's performance.
- **Depending on the chimney cleanliness, consider using the full length intake so as to lessen the possibility of sense rod contamination and flame rectification issues.**

Figure 5.3

D. Connecting to SLP

Terminating horizontally is not allowed.

Vertical terminations are measured to top of chimney.

This appliance is listed for use with LINK-DV systems and components only. It is permissible to extend venting above existing chimney (within specified maximum vertical limits) using SLP series 6-5/8 inch gas direct-vent pipe. Connection is made using DV-46DVA-GK.

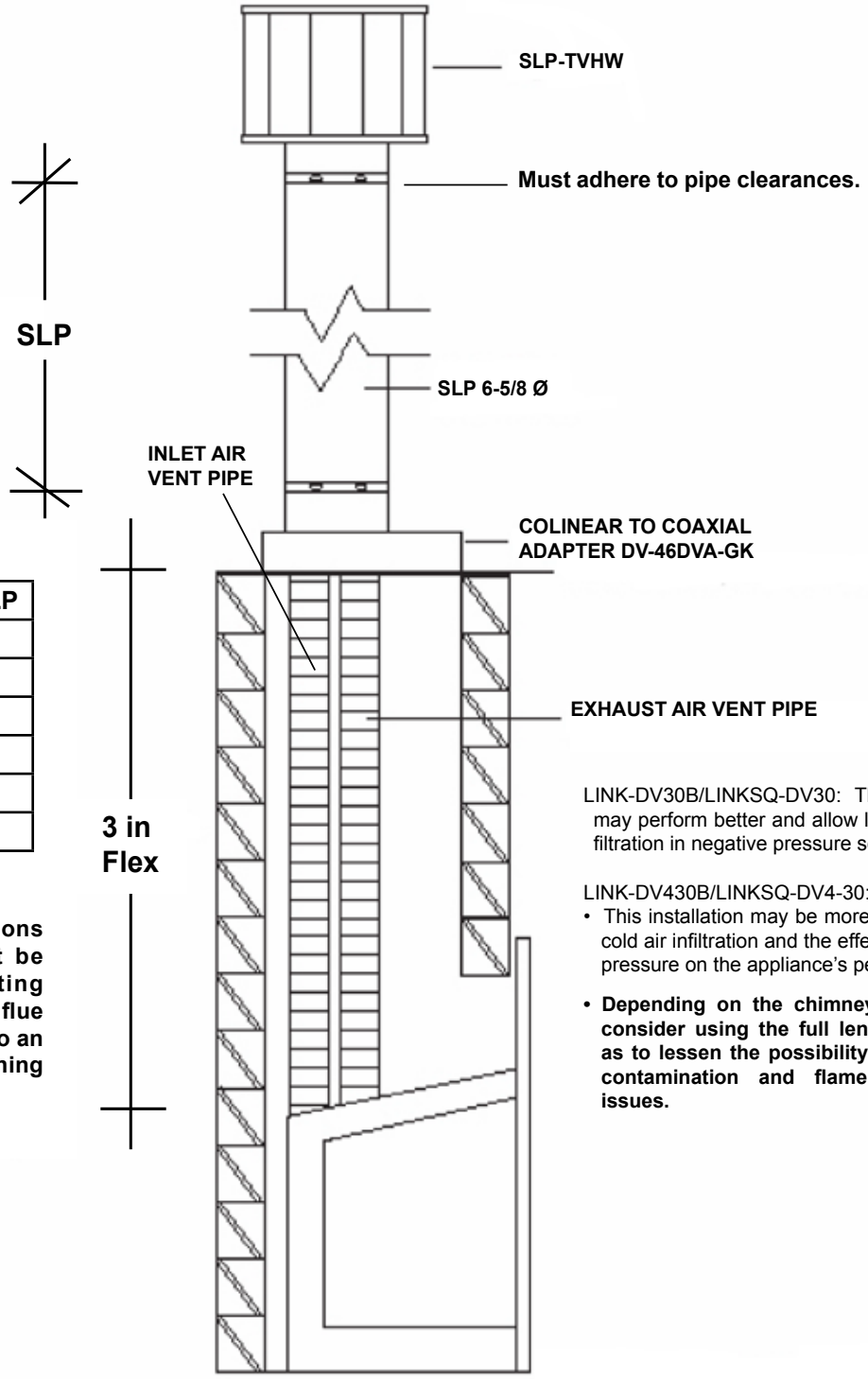

Flex	Min SLP
5 ft.	8 ft.
6 ft.	7 ft.
7 ft.	6 ft.
8 ft.	5 ft.
9 ft.	4 ft.
10 ft.	N/A

NOTE: **3 in. sections of flex pipe must be enclosed to existing masonry fireplace flue vent or installed into an existing wood burning vent system.**

LINK-DV30B/LINKSQ-DV30: This installation may perform better and allow less cold air infiltration in negative pressure settings.

LINK-DV430B/LINKSQ-DV4-30:

- This installation may be more susceptible to cold air infiltration and the effects of negative pressure on the appliance's performance.
- **Depending on the chimney cleanliness, consider using the full length intake so as to lessen the possibility of sense rod contamination and flame rectification issues.**

Four 45 degree elbows can be used in the vertical section of SLP venting to avoid structural members such as floor joist or trusses. Maximum total vent run is 50 ft. 90 degree elbows may NOT be used.

Up to four 45 degree elbows may be used as long as the minimum venting requirements are met per the above chart.

Figure 5.4 Optional SLP Venting Configuration - Vertical Termination

E. Connecting Vent Pipe

Reference instructions in the termination kit.

- Install the 3 in. flexible vent pipe(s) down through the chimney.
- Secure the exhaust flexible vent pipe to the exhaust starting collar on top of the appliance with three screws. See Figure 5.1.

  For best results in cold climate be sure 3 in. flex is flush and tight to the collar slide plate assembly. Seal with stove cement or aluminum foil tape. Do not use silicone.
- Use 3 screws to attach the section of inlet air vent to the inlet air starting collar on the collar slide plate assembly. See Figure 5.1.

  NOTE: The collar slide plate assembly may be removed from appliance to aid installation and service.

  For best results in cold climate be sure 3 in. flex is flush and tight to the collar slide plate assembly. Seal with stove cement or aluminum foil tape. Do not use silicone.

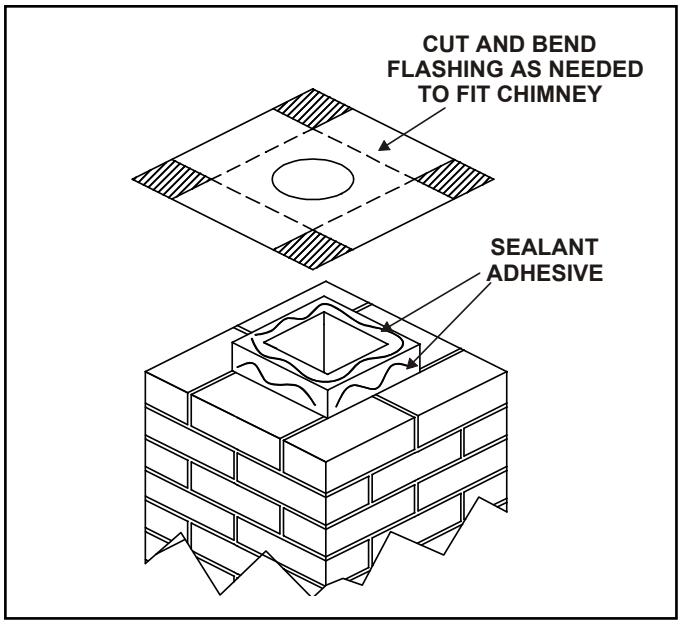

Figure 5.5

- Trim chimney top plate to minimize excess overhang or bend over flue tile. See Figure 5.5.
- Place 3/8 inch bead of **300 ºF minimum continuous exposure rating** silicone on flue tile top.

F. Placing, Securing and Leveling the Appliance

WARNING! Risk of Explosion/Combustion Fumes! *Connect vent sections per installation instructions.*

- *Connect exhaust vent pipe ONLY to exhaust starting collar and termination cap center collar.*
- *Connect inlet air vent ONLY to inlet air collar on appliance and either the termination cap inlet air collar OR terminate within chimney.*
- ***DO NOT** allow vent to sag below connection point to appliance.*
- Install insert (without surround attached) into existing fireplace while pulling collar slide plate assembly forward.
- Install gas line into hole provided on side. See Figure 5.6.
- Secure collar slide plate assembly to appliance by securing with #8 screw. See Figure 5.1.
- Level the appliance from side to side and front to back. Adjust leveling legs to desired vertical position so appliance is level. Use the leveling bolts included with the manual bag.
- Position any excess flexible vent pipe back up into chimney without sagging. Twist and push flex vent together to shorten.
- Attach surround. Follow instructions for surround installation included with the front.
- Push insert into the opening so that it tightly overlaps the fireplace opening.

WARNING! Risk of Fire! *Only an approved Hearth & Home Technologies surround may be used to cover integral grills on solid fuel burning fireplaces. No other components such as shrouds, sheet metal plates, etc., may be used to seal off vents.*

WARNING! Risk of Explosion! *Failure to position the parts in accordance with these diagrams or failure to use only parts specifically approved with this appliance may result in property damage or personal injury.*

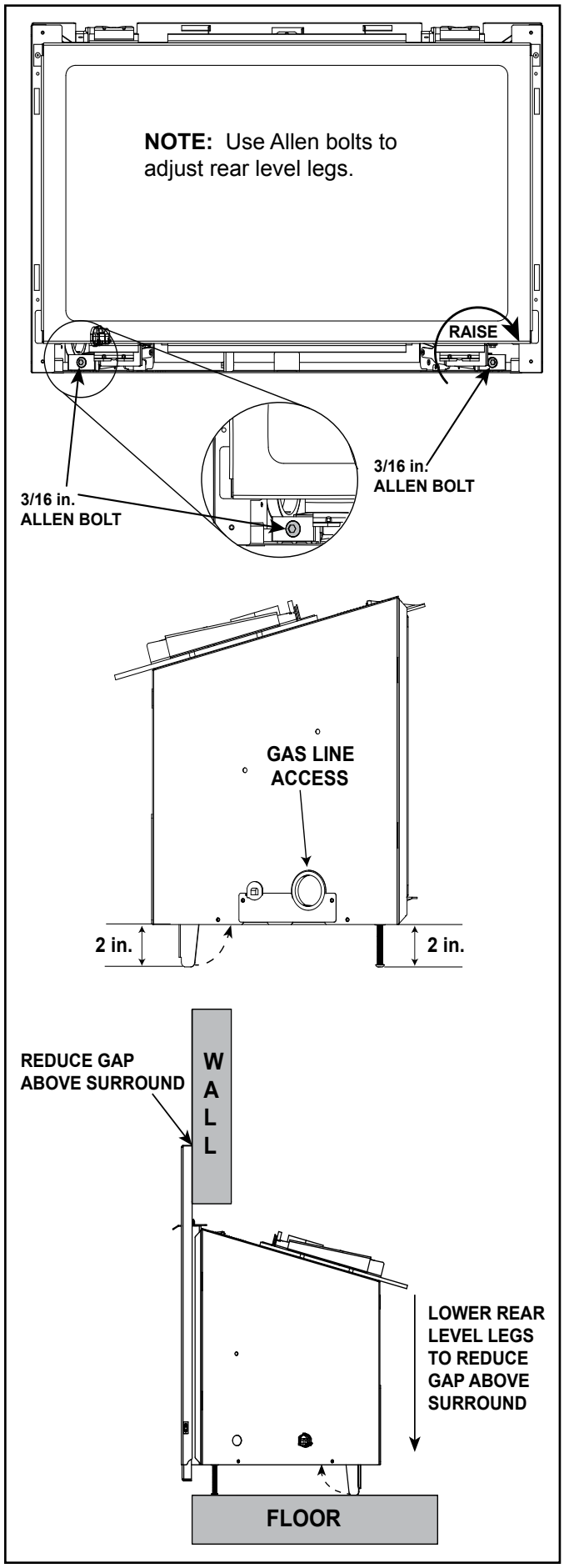

Figure 5.6 Leveling Leg Detail

G. Installing Termination Cap

⚠ WARNING

Fire Risk.

Maintain vent clearance to combustibles as specified.

- **DO NOT** pack air space with insulation or other materials.

Failure to keep insulation or other materials away from vent pipe may cause overheating and fire.

CAUTION! Risk of Cuts/Abrasions/Flying Debris. *Wear protective gloves and safety glasses during installation. Sheet metal edges are sharp.*

For installation of termination cap see minimum vent heights for various pitched roofs. See Figure 5.7.

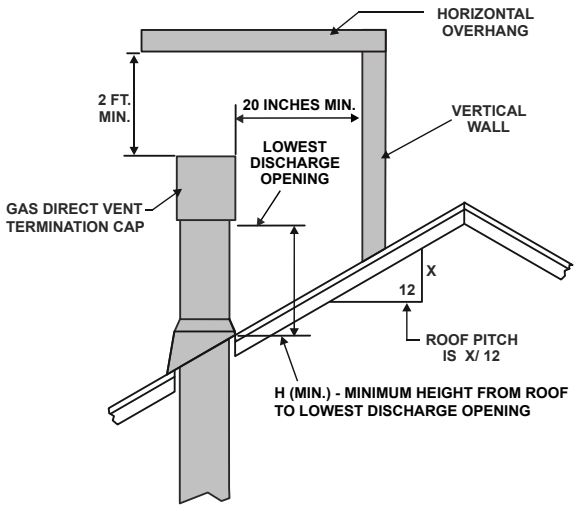

Roof Pitch	H (Min.) Ft.
Flat to 6/12	1.0*
Over 6/12 to 7/12	1.25*
Over 7/12 to 8/12	1.5*
Over 8/12 to 9/12	2.0*
Over 9/12 to 10/12	2.5*
Over 10/12 to 11/12	3.25
Over 11/12 to 12/12	4.0
Over 12/12 to 14/12	5.0
Over 14/12 to 16/12	6.0
Over 16/12 to 18/12	7.0
Over 18/12 to 20/12	7.5
Over 20/12 to 21/12	8.0

* H minimum may vary depending on regional snowfall. Refer to local codes.

Figure 5.7 Minimum Height from Roof to Lowest Discharge Opening

6 Electrical Information

A. General Information

WARNING! Risk of Shock or Explosion! DO NOT *wire 110-120 VAC to the valve or to the appliance wall switch. Incorrect wiring will damage controls.*

NOTICE: *This appliance must be electrically wired and grounded in accordance with local codes or, in the absence of local codes, with* **National Electric Code ANSI/NFPA 70-latest edition** *or the* **Canadian Electric Code CSA C22.1.**

- This appliance comes with a 110-120 VAC cord assembly. This is required for proper operation of the appliance (IntelliFire Touch® Ignition). An outlet box may be installed in a bottom back corner of the existing solid fuel masonry or factory built fireplace to plug in the cord assembly, or the supplied power cord may be routed out onto the hearth to a nearby outlet.
- A 110-120 VAC circuit for this product must be protected with ground-fault circuit-interrupter protection, in compliance with the applicable electrical codes, when it is installed in locations such as in bathrooms or near sinks.
- Low voltage and 110-120 VAC voltage cannot be shared within the same wall box.
- In some instances, the spark ignition of the fireplace may cause intermittent, non-damaging, interference during the lighting sequence with a TV plugged into the same circuit. It is recommended that the fireplace and TV use different circuits to mitigate the interference potential. If interference is occurring on the same circuit, the use of surge protectors may help alleviate the interference.

NOTICE: DO NOT *wire 110-120 VAC to wall switch.*

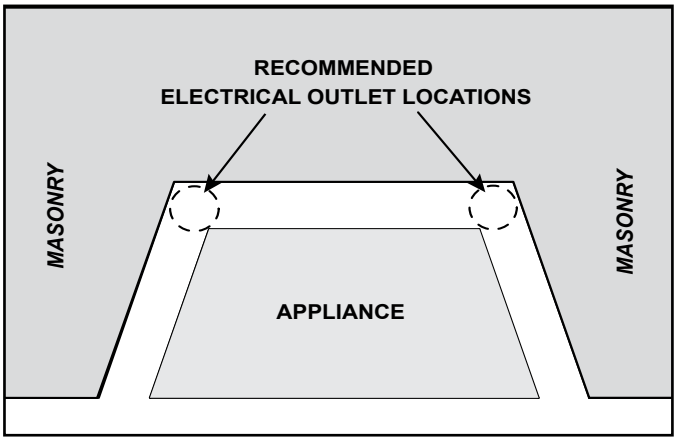

Figure 6.1 Electrical Outlet Detail

Appliance Cord Length (approximate)

Appliance Size	Left Side	Right Side
30 in.	10 ft. 3 in.	7 ft. 6 in.

Electrical Service and Repair

WARNING! Risk of Shock! *Label all wires prior to disconnection when servicing controls. Wiring errors can cause improper and dangerous operation. Verify proper operation after servicing.*

WARNING! Risk of Shock! *Replace damaged wire with type 105 ºC rated wire. Wire must have high temperature insulation.*

- Refer to Service Parts section of appliance Owner's Manual for replacement part information.

Reset Switch

- A reset switch and USB-C battery plug are included with the appliance surround and should be attached to the side of the surround. See Installation instructions shipped with the decorative barrier front.
- Reset switch must be installed and in the "ON" position for appliance to operate.

Wire Management

Proper wire management is required for proper operation of the appliance. Component damage could occur if electrical cords and/or wires contact the firebox. Ensure wires are not contacting the firebox.

NOTICE: Verify proper wire management prior to operation of the appliance. Component damage could occur.

- *Verify electrical wire connections.*
- *Ensure wires* ***DO NOT*** *contact firebox.*

IntelliFire Touch® Ignition System Wiring

- Plug the appliance power cord to 110-120 VAC outlet for proper operation of the appliance.

WARNING! Risk of Shock or Explosion! *DO NOT wire the appliance junction box to a wall electrical switch. The appliance junction box will be wired to a Romex cable that is connected to the utility power (110-120 VAC). DO NOT miswire the appliance junction box Line (Black), Neutral (White) and Ground (Green) connections to the Romex cable. Otherwise, there is a danger of electrical shock and the controls malfunctioning.*

- Refer to Figure 6.2 IntelliFire Touch (IFT 2.0) Wiring Diagram.
- This appliance is equipped with an IFT control system which operates on 6 VDC through the included adapter.
- Connect the 6 VDC power adapter AC input power plug into the appliance junction box to supply power to the appliance.

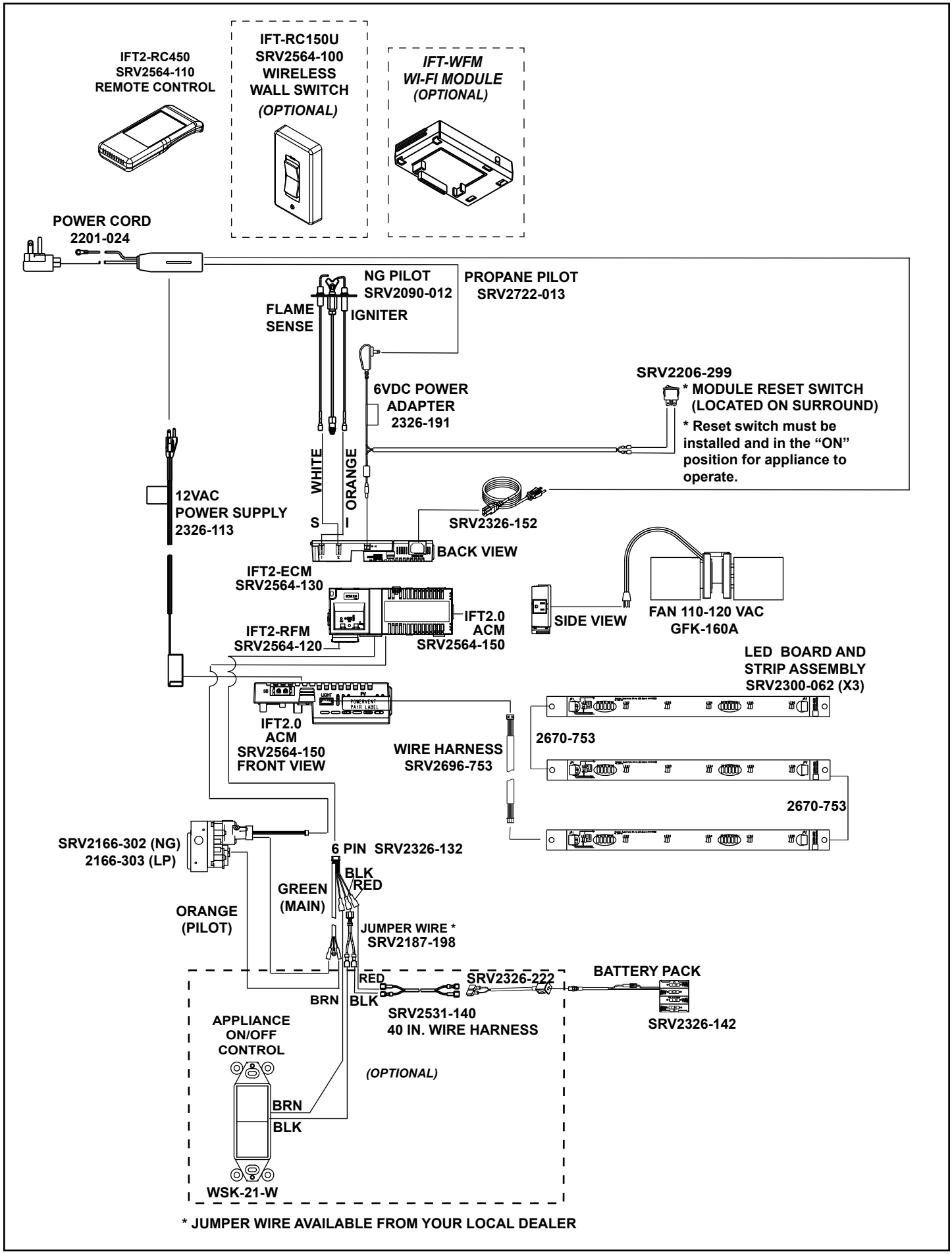

Figure 6.2 IntelliFire Touch 2.0 Wiring Diagram

Battery Pack

Battery pack is not factory installed in appliances. See appliance manual bag for battery pack. Battery pack may be installed without batteries during normal operation.

When operating appliance under battery power, battery pack **MUST** be moved outside of the appliance.

NOTICE: *Batteries should only be used as a power source in the event of an emergency power outage. Batteries should not be used as a primary long-term power source. Battery polarity must be correct when installing batteries.*

DO not store batteries in the battery pack when the appliance is powered by the 6 volt transformer connected to permanent electrical service. Store battery pack in appliance manual bag when not in use.

NOTICE: *Some functionality will be lost when using the battery backup power source. The IFT2-RC450 remote control will not operate fan, lights, or any other auxiliary functions that require the AC power.*

LED Lights

LED lights are standard on the RUBYP30I.

The LED lights are controlled using the remote control.

B. Service for Fan

On an appliance that is already installed, removal of decorative barrier front and gas appliance insert may be required.

Option 1:

1. Detach flexible liner from top of appliance if insert is installed by removing the collar slide plate screw. See Figure 5.1.
2. Remove the five screws on the rear cover plate. See Figure 6.3.
3. Service / replace fan. Figure 6.2 shows a wiring diagram.
4. Reinstall the rear cover plate back on the appliance.
5. Reattach flexible liner and replace collar slide plate screw. See Figure 5.1.

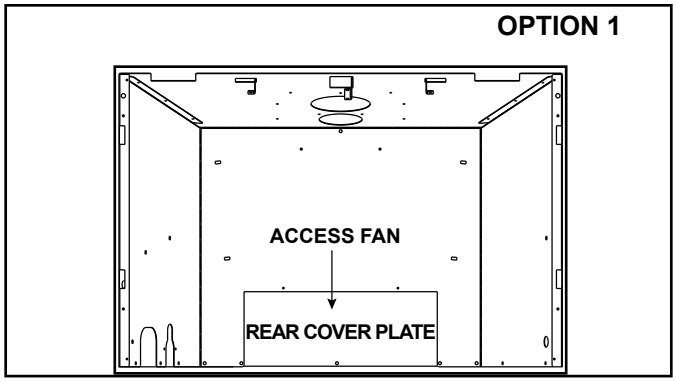

Figure 6.3 Cover Plate Removed (Option 1)

1. Remove decorative barrier front, glass assembly, logs, glass media, pilot shield assembly, burner assembly, base pan assembly and valve plate assembly. See Figure 6.5.
2. Service / install fan. Figure 6.2 shows a wiring diagram.
3. Reinstall valve plate assembly, base pan assembly, burner assembly, pilot shield assembly, glass media, logs, glass assembly and decorative barrier front.

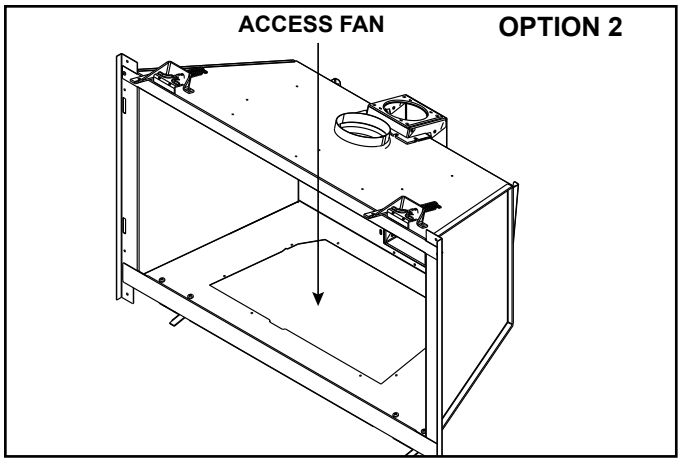

Figure 6.4 Through Valve Plate Opening (Option 2)

C. Access Pilot and Burner Assemblies

To access the pilot and burner assemblies, removal of the pilot shield assembly, burner assembly and base pan assembly is required. See Figure 6.5.

1. Remove decorative barrier front, glass assembly, logs and glass media, if installed.
2. Remove the pilot shield assembly by removing one screw.
3. Remove the burner assembly by removing two screws.
4. Remove the base pan assembly by removing one screw.

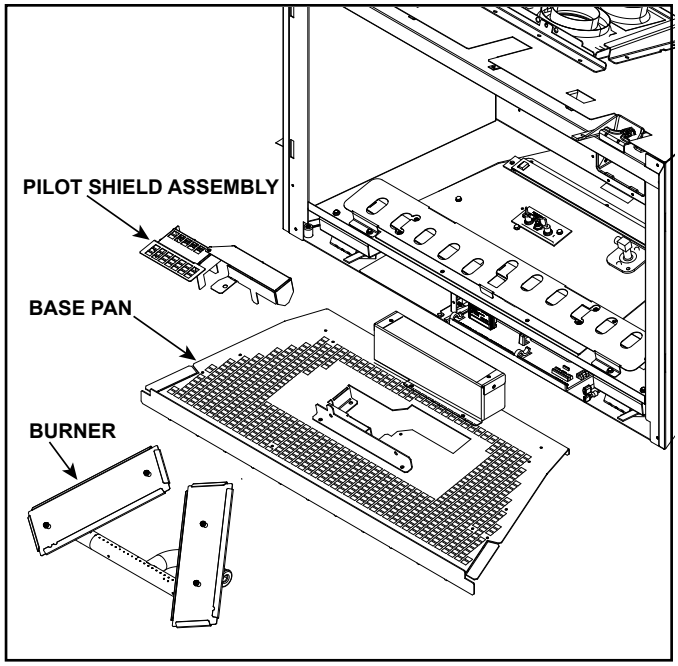

Figure 6.5 Remove Pilot Shield Assembly, Burner Assembly and Base Pan Assembly

D. Service for LED's

1. Remove decorative barrier front, glass assembly, logs, glass media, pilot shield assembly, burner assembly and base pan assembly, See Figure 6.6.
2. Remove LED cover (heat shield).
3. Service / replace LED's. Figure 6.2 shows a wiring diagram.
4. Reinstall LED cover (heat shield). See Figure 6.6.
5. Reinstall base pan assembly, burner assembly, pilot shield assembly, glass media, logs, glass assembly and decorative barrier front.

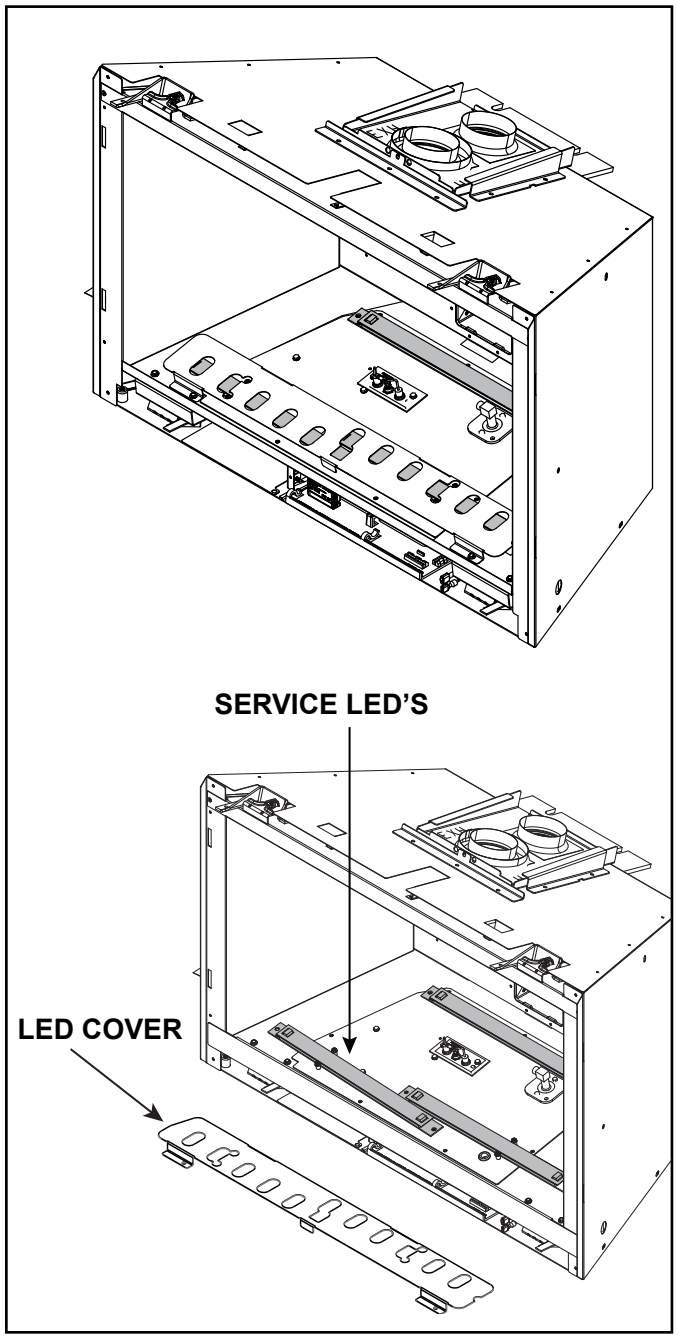

Figure 6.6 Service LED's

7 Gas Information

A. Fuel Conversion

- Make sure the appliance is compatible with available gas types.
- Conversions must be made by a qualified service technician using Hearth & Home Technologies specified and approved parts.
- Reference the following diagrams for gas shut off detail and component access.
- Reference Section 9.A to remove fixed glass assembly.

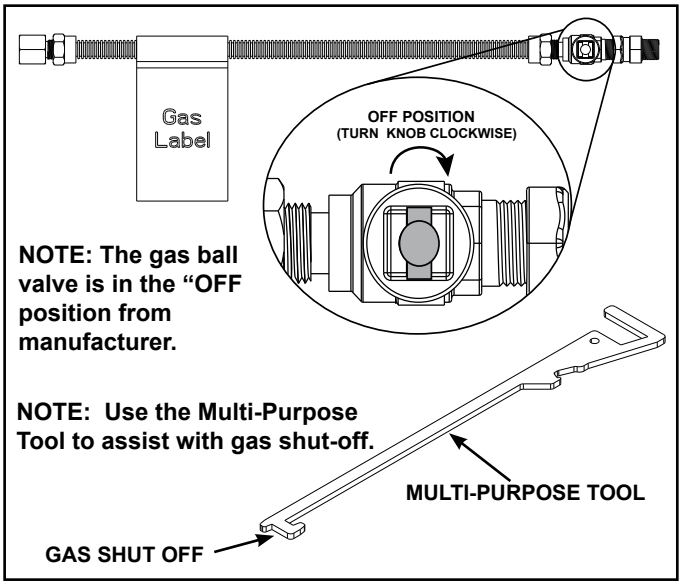

Figure 7.1 Gas Shut-off

- Use multi-purpose tool to assist with gas shutoff. See Figure 7.1. The gas ball valve is in the "OFF" position from manufacturer.

- Glass clip assemblies can be removed for additional component accessibility. See Figure 7.2.

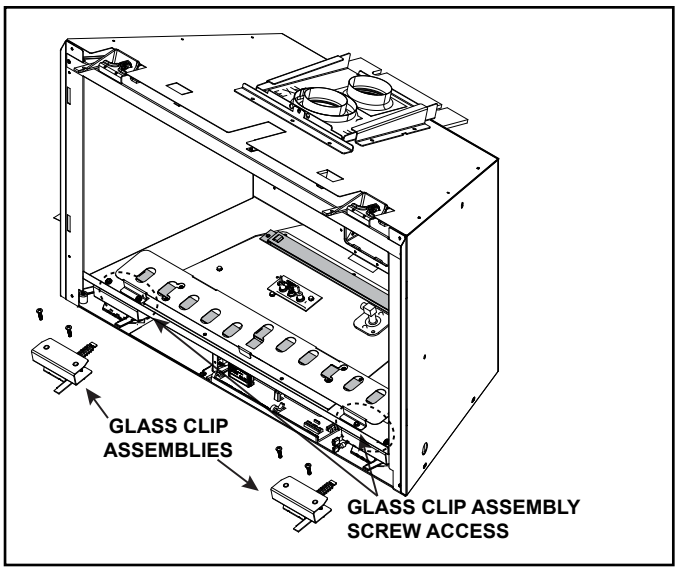

Figure 7.2 Glass Clip Assembly Removal

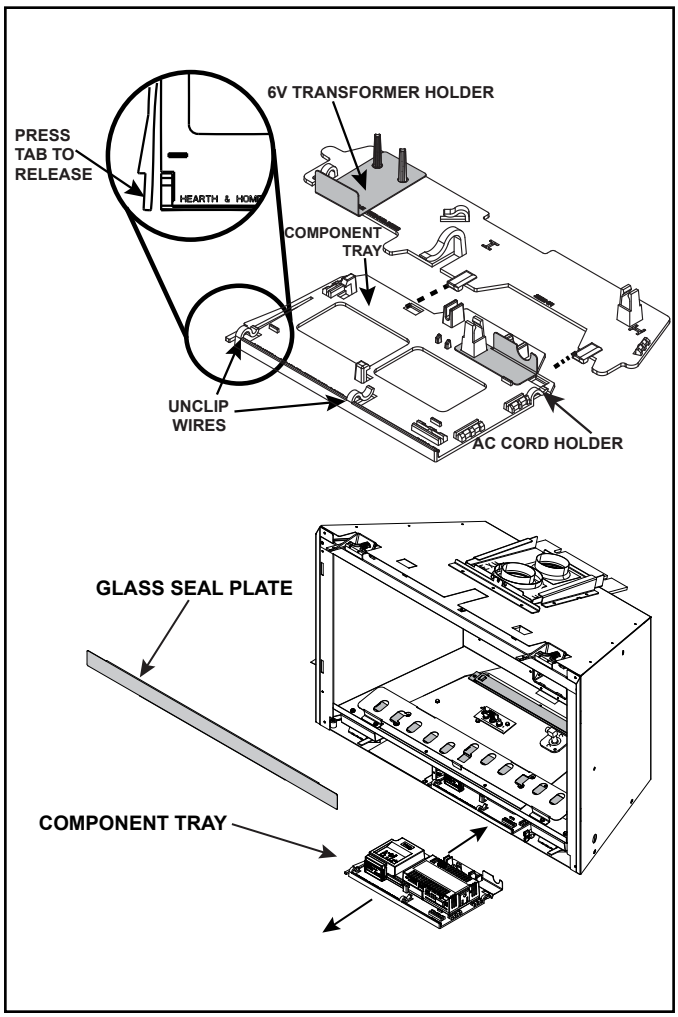

Figure 7.3 Component Tray

WARNING! Glass seal plate must be properly installed. Risk of elevated component temps and carbon monoxide exposure.

CAUTION: *Any wires removed from the wire clips during appliance installation or service must be reinstalled in the wire clips.*

B. Gas Pressure

- Optimum appliance performance requires proper input pressures.
- Gas line sizing requirements will be determined in ANSI Z223.1 National Fuel Gas Code in the USA and CAN/CGA B149 in Canada.
- Pressure requirements are:

Gas Pressure	Natural Gas	Propane
Minimum inlet pressure	5.0 in. w.c.	11.0 in. w.c.
Maximum inlet pressure	10.0 in. w.c.	13.0 in. w.c.
Manifold pressure	3.5 in. w.c.	10.0 in. w.c.

WARNING! Risk of Fire or Explosion! *High pressure will damage valve. Low pressure may cause explosion.*

- Verify inlet pressures. Verify minimum pressures when other household gas appliances are operating.
- Install regulator upstream of valve if line pressure is greater than 1/2 psig.

⚠ WARNING

Fire Risk.

Explosion Hazard.

High pressure will damage valve.

- Disconnect gas supply piping BEFORE pressure testing gas line at test pressures above 1/2 psig.
- Close the manual shutoff valve BEFORE pressure testing gas line at test pressures equal to or less than 1/2 psig.

Note: Have the gas supply line installed in accordance with local codes, if any. If not, follow ANSI Z223.1. Installation should be done by a qualified installer approved and/or licensed as required by the locality. (In the Commonwealth of Massachusetts installation must be performed by a licensed plumber or gas fitter).

Note: A listed (and Commonwealth of Massachusetts approved) 1/2 in. (13 mm) T-handle manual shut-off valve and flexible gas connector are connected to the 1/2 in. (13 mm) control valve inlet.

- **If substituting for these components, please consult local codes for compliance.**

C. Gas Connection

WARNING! Risk of Fire or Explosion! *Support control when attaching pipe to prevent bending gas line.*

- Refer to Reference Section 3 for location of gas line access in appliance.
- The gap between supply piping and gas access hole may be caulked with caulk with a minimum of 300 ºF continuous exposure rating or stuffed with non-combustible, unfaced insulation to prevent cold air infiltration.
- Ensure that gas line does not come in contact with outer wrap of the appliance. Follow local codes.
- Pipe incoming gas line to the factory supplied flex line. See Figure 7.4.
- Connect incoming gas line to the 1/2 in. (13 mm) connection on manual shutoff valve.
- A small amount of air will be in the gas supply lines.

WARNING! Risk of Fire or Explosion! *Gas build-up during line purge could ignite.*

- *Purge should be performed by qualified service technician.*
- *Ensure adequate ventilation.*
- *Ensure there are no ignition sources such as sparks or open flames.*

Light the appliance. It will take a short time for air to purge from lines. When purging is complete the appliance will light and operate normally.

WARNING! Risk of Fire, Explosion or Asphyxiation! *Check all fittings and connections with a non-corrosive commercially available leak-check solution.* ***DO NOT*** *use open flame. Fittings and connections could have loosened during shipping and handling.*

WARNING! Risk of Fire! DO NOT *change valve settings. This valve has been preset at the factory.*

Figure 7.4

D. High Altitude Installations

NOTICE: *If the heating value of the gas has been reduced, these rules do not apply. Check with your local gas utility or authorities having jurisdiction.*

When installing above 2000 feet elevation:

- In the USA: Reduce input rate 4% for each 1000 feet above 2000 feet.
- In CANADA: Input ratings are certified without a reduction of input rate for elevations up to 4500 feet (1370 m) above sea level. Please consult provincial and/or local authorities having jurisdiction for installations at elevations above 4500 feet (1370 m)

Check with your local gas utility to determine proper orifice size.

E. Air Shutter Setting

WARNING! Risk of Explosion! *When adjusting air shutter,* ***DO NOT*** *allow media in a position that pieces can fall into area in front of pilot or air shutter. Delayed ignition could occur.*

Air shutter settings should be adjusted by a qualified service technician at the time of installation. The air shutter is set at the factory for minimum vertical vent run. Adjusting air shutter may be desired for longer vent runs. See Figure 7.5. The pilot shield assembly has been removed in Figure 7.5.

NOTICE: *If sooting occurs, provide more air by opening the air shutter.*

Air Shutter Settings

	NG	Propane
RUBYP30I	**3/16 in.**	**Full Open**

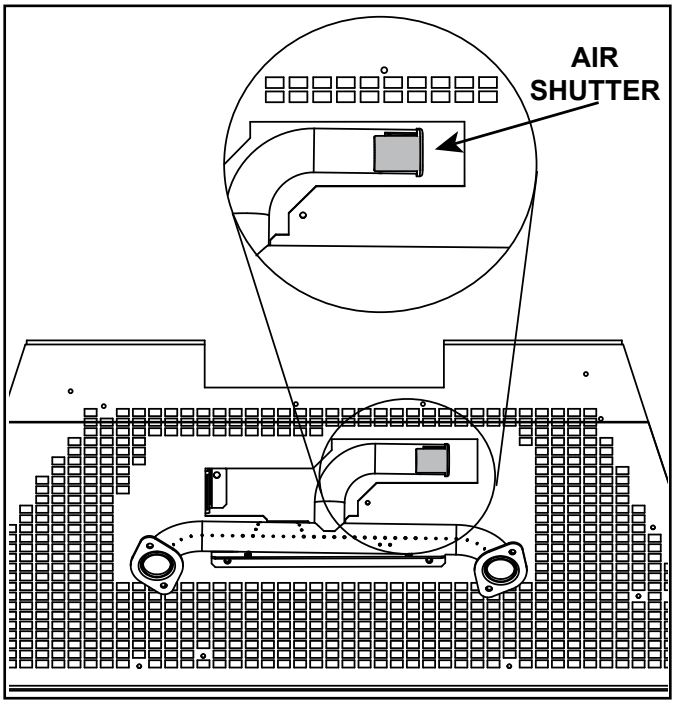

Figure 7.5 Air Shutter

F. Service / Replace Appliance Gas Valve

1. Remove decorative barrier front, glass assembly, logs, glass media, pilot shield assembly, burner assembly, base pan assembly and valve plate assembly. See Figure 6.5.
2. Access gas valve as shown in Figure 7.6 and perform service and/or replacement.
3. Reinstall valve plate assembly, base pan assembly, burner assembly, pilot shield assembly, glass media, logs, glass assembly and decorative barrier front.

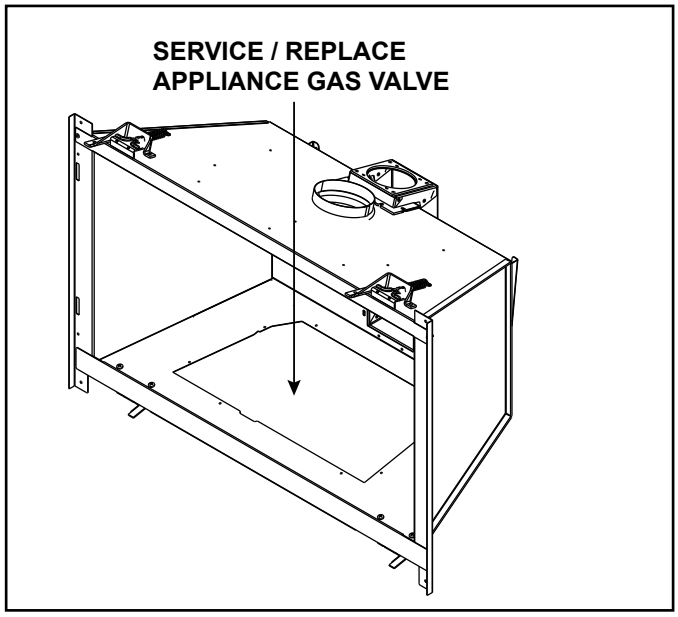

Figure 7.6 Gas Valve Access

8 Finishing

A. Mantel, Wall Projections & Hearth Extensions

WARNING! Risk of Fire! *Comply with all minimum clearances to combustibles as specified. Framing or finishing material closer than the minimums listed must be constructed entirely of noncombustible materials (i.e., steel studs, concrete board, etc).*

Clearance to combustible material under the insert is 1/4 inch (6 mm).

- *Use leveling legs to raise insert minimum 1/4 inch (6 mm) above combustible material or outer wrap of factory built firebox.*

Combustible facings must not extend behind the insert surround. For non-combustible material specifications refer to Section 1.E and 1.F.

Mantel Legs or Wall Projections

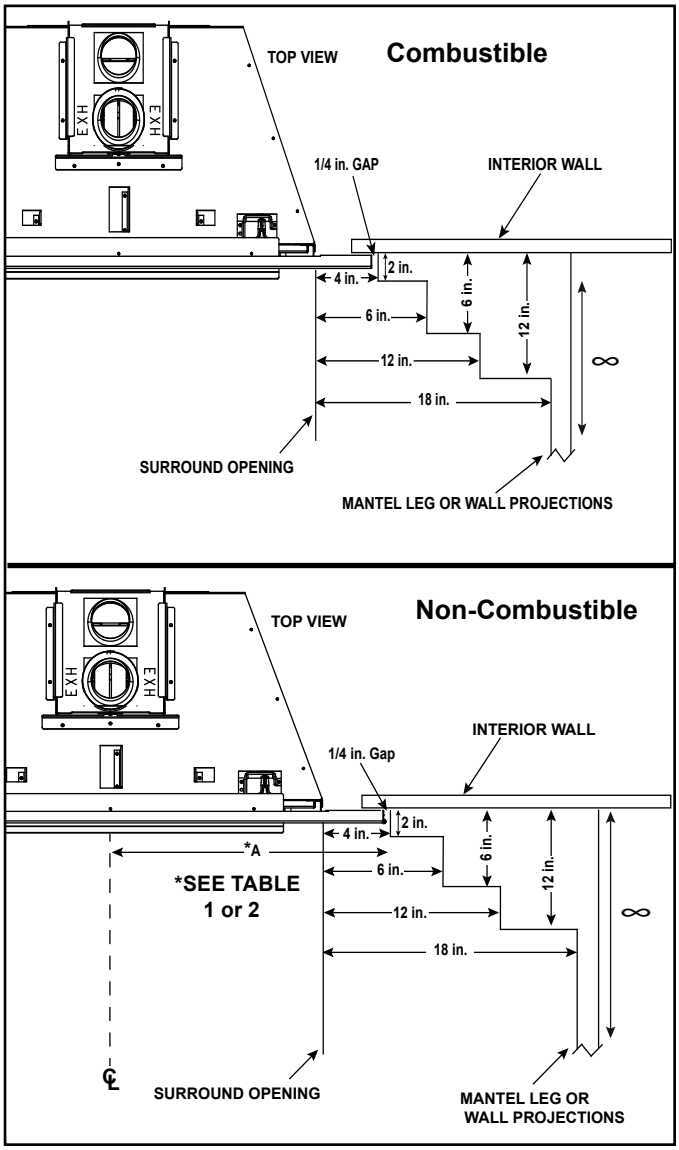

Figure 8.1 Clearances to Mantel Legs or Wall Projections (Acceptable on both sides of surround opening)

Mantels or Wall Projections - Non-Combustible

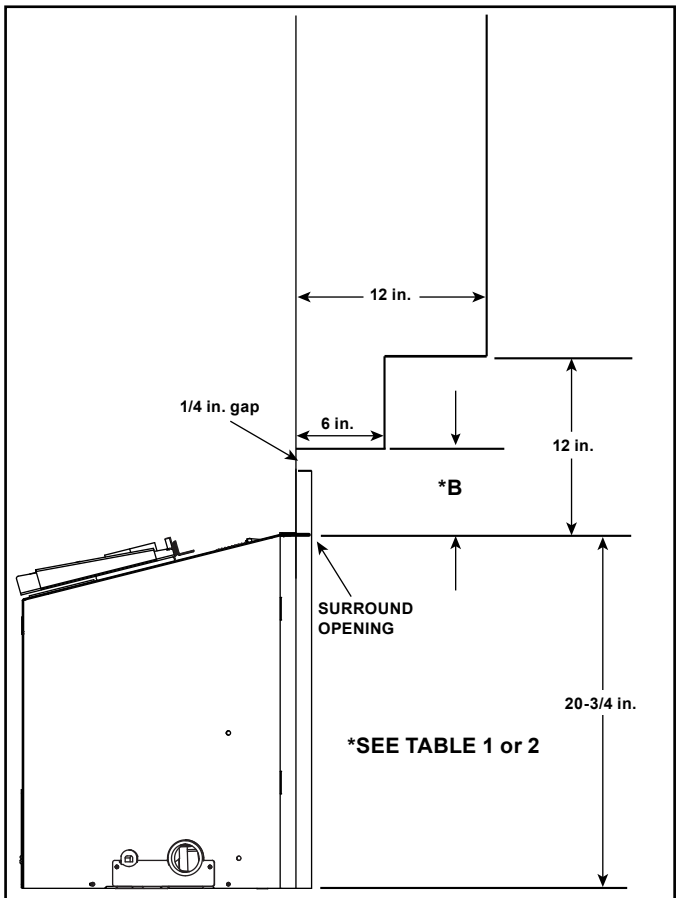

Note: Measurement is taken from top of the surround opening.

Figure 8.2 Minimum Vertical and Maximum Horizontal Dimensions- Non-Combustible

Appliance Size	Surround Model	A	B
30 in.	MI30-4027	15-3/8 in.	6-9/16 in.
	MI30-4230		9-9/16 in.
	MI30-4432		11-9/16 in.

Table 1 Mantel Leg or Wall Projection Minimum Dimension needed when Installing a Standard Surround

Appliance Size	Front Model	A	B
30 in.	INFIT	17-1/8 in.	1-1/4 in.
	CSFI, CASFI	18-9/16 in.	2-1/2 in

Table 2 Mantel Leg or Wall Projection Minimum Dimension needed when Installing a Custom Surround. Front Model Determines the Minimum Size of the Custom Surround

Note: All numbers in Tables 1 and 2 include the 1/4 in. gap on surround edge.

Mantels - Combustible

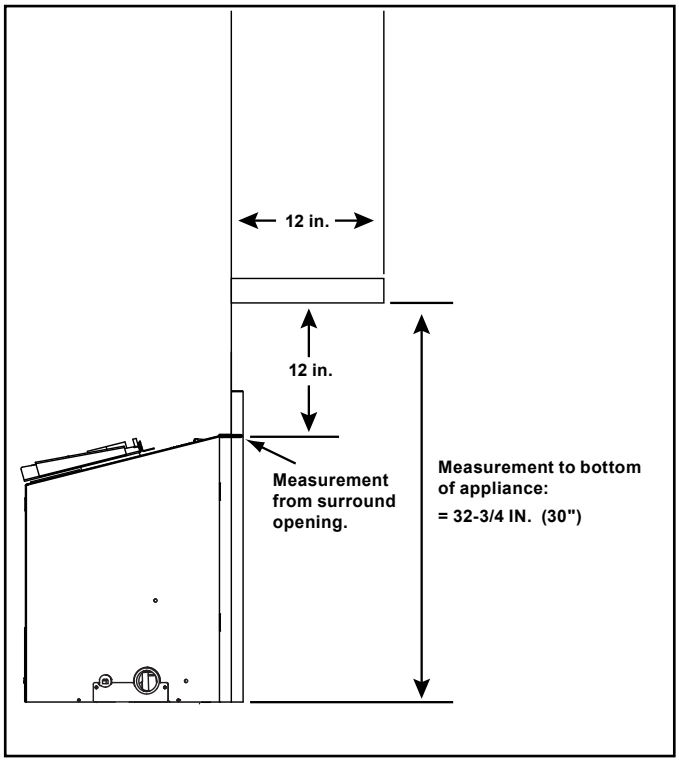

Figure 8.3 Minimum Vertical and Maximum Horizontal Dimensions - Combustible

B. Hearth Extension

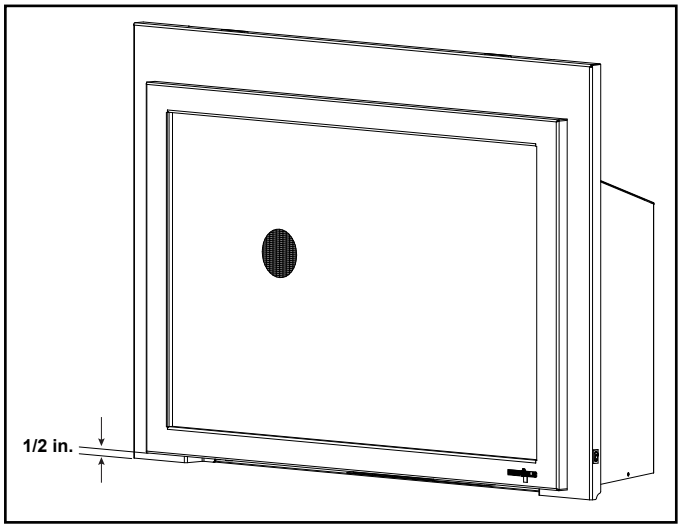

Figure 8.4 Minimum Required 1/2 in. Gap

- All flooring and hearth material must remain below the bottom of the surround. See Figure 8.5.
- Combustible flooring may be located in front of the appliance. Exception - no vinyl / adhesive flooring. See Figure 8.6. Refer to Section 3.E for additional vinyl flooring information.
- 1/2 inch gap under the bottom of the front must be maintained. See Figure 8.4.
- A minimum 1/4 inch gap from the bottom of the appliance to the metal floor of the solid fuel firebox is **REQUIRED.** See side view in Figure 8.7.
- Combustible flooring underneath the appliance is acceptable with a 1/4 inch gap. See Figure 8.7.

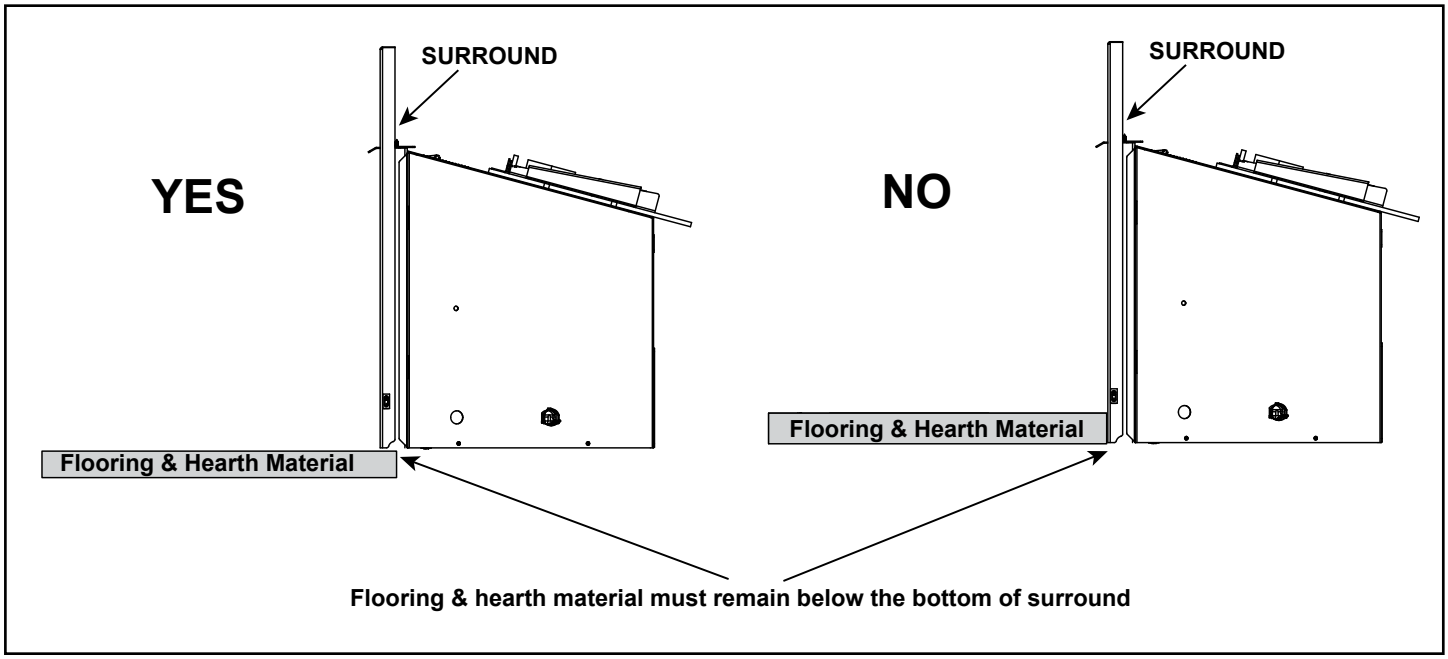

Figure 8.5 Flooring & Hearth Material

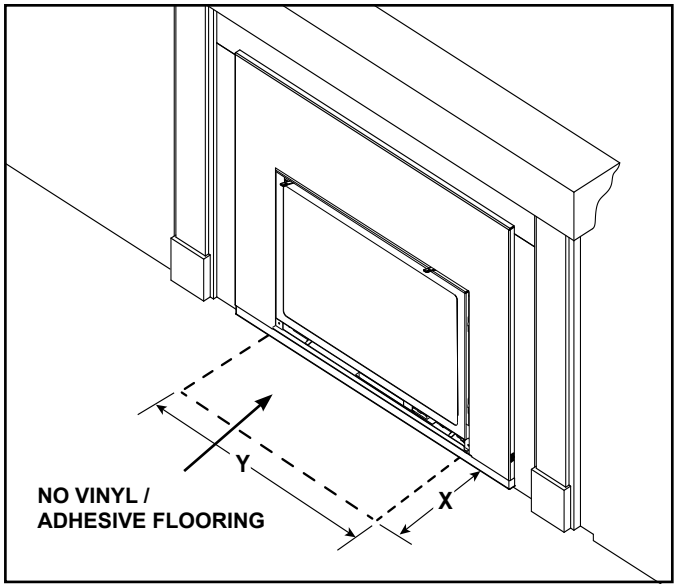

Figure 8.6 Hearth - Combustible Material Exception

Vinyl / Adhesive Flooring - Minimums

Appliance Size	Depth (X)	Width (Y)
30 in.	24 in.	30-3/4 in.

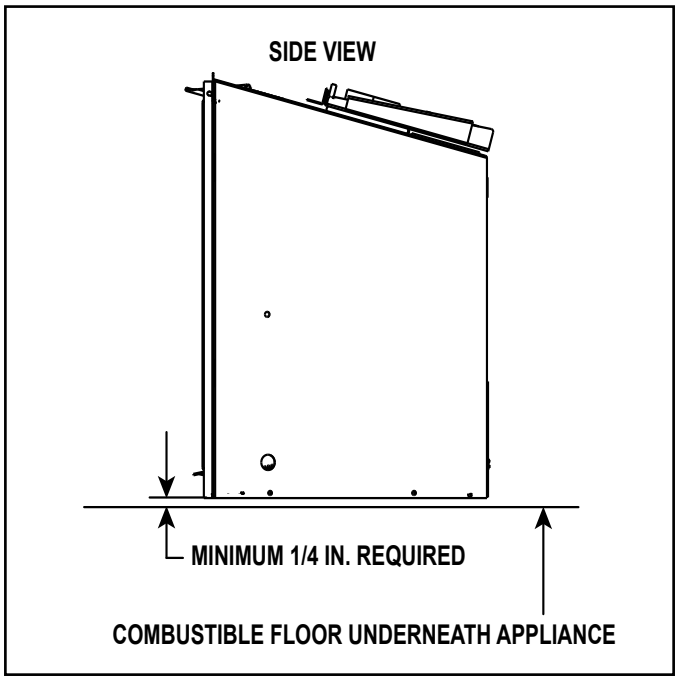

Figure 8.7 Solid Fuel Floor Clearance

9 Appliance Setup

A. Fixed Glass Assembly

WARNING! Risk of Asphyxiation! *Handle fixed glass assembly with care. Inspect the gasket to ensure it is undamaged and inspect the glass for cracks, chips or scratches.*

- ***DO NOT*** *strike, slam or scratch glass.*
- ***DO NOT*** *operate fireplace with glass removed, cracked, broken or scratched.*
- *Replace as a complete assembly.*

Removing Fixed Glass Assembly

CAUTION! Handle fixed glass assembly with care. *Glass is breakable.*

- *Avoid striking, scratching or slamming glass*
- *Avoid abrasive cleaners*
- ***DO NOT*** *clean glass while it is hot*

- The glass assembly fastens to the fireplace in four places. Four of the fastening mechanisms are spring-loaded glass latches. An example of the glass latch is shown in Figure 9.2.
- To release glass assembly, use the supplied multi-purpose tool (Figure 9.1) to pull the two bottom spring-loaded latches forward and allow them to retract away from the glass assembly. Tilt the bottom of the glass assembly outward until the top latches disengage.

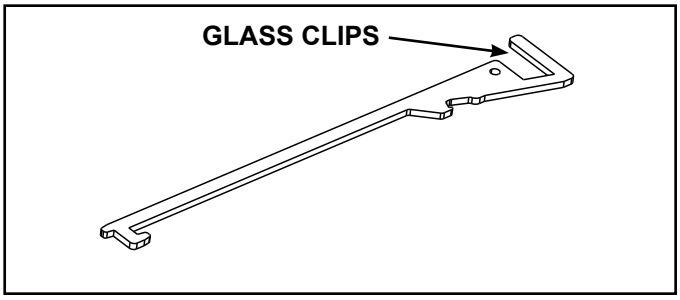

Figure 9.1 Multi-Purpose Tool

Replacing Fixed Glass Assembly

- Verify Glass Seal Plate is properly installed. See Figure 9.2.

WARNING! Glass seal plate must be properly installed. *Risk of elevated component temperatures and carbon monoxide exposure.*

- Tilt the top of the glass assembly toward fireplace and slide glass assembly upward to engage top latches. Verify top latches are fully engaged and then fasten the two bottom latches using the supplied multi-purpose tool.
- Reinstall decorative barrier front.

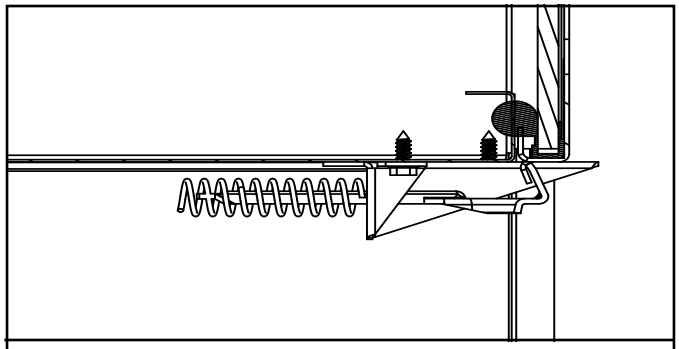

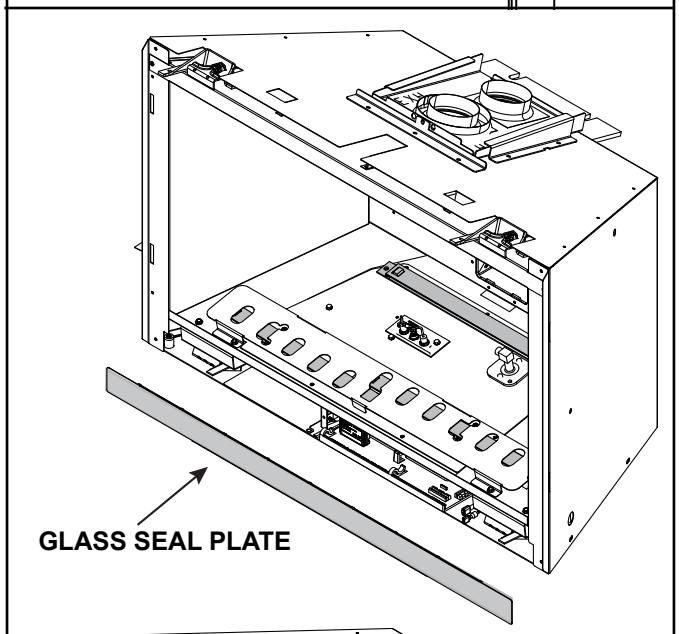

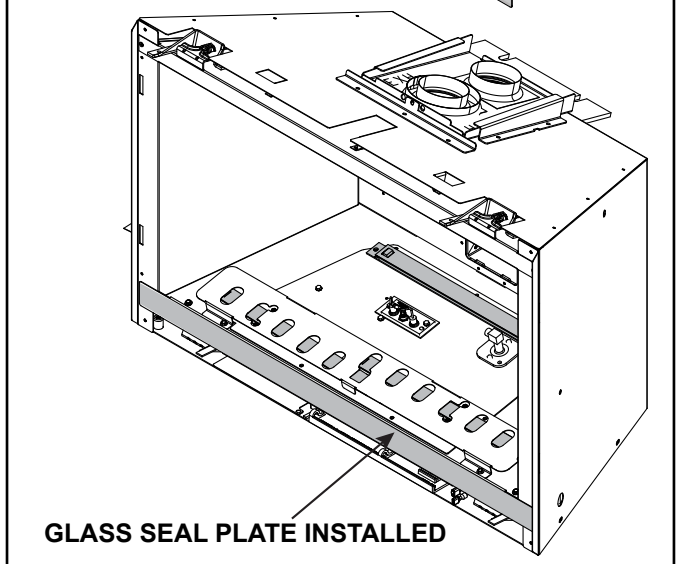

Note: Appliance is shipped with glass seal plate in the installed position.

Figure 9.2 Glass Seal Plate

B. Remove the Shipping Materials

Remove and discard shipping materials that support logs and media.

Remove remaining shipping materials from inside or underneath the firebox.

Note: Remove the zip ties from the appliance that hold the electrical cord, gas flexline and multi-purpose tool in place for shipping.

The restrictor doors are shipped from the factory in the open position. Ensure that the restrictor doors are bent at a 90°angle as shown in Figure 9.3.

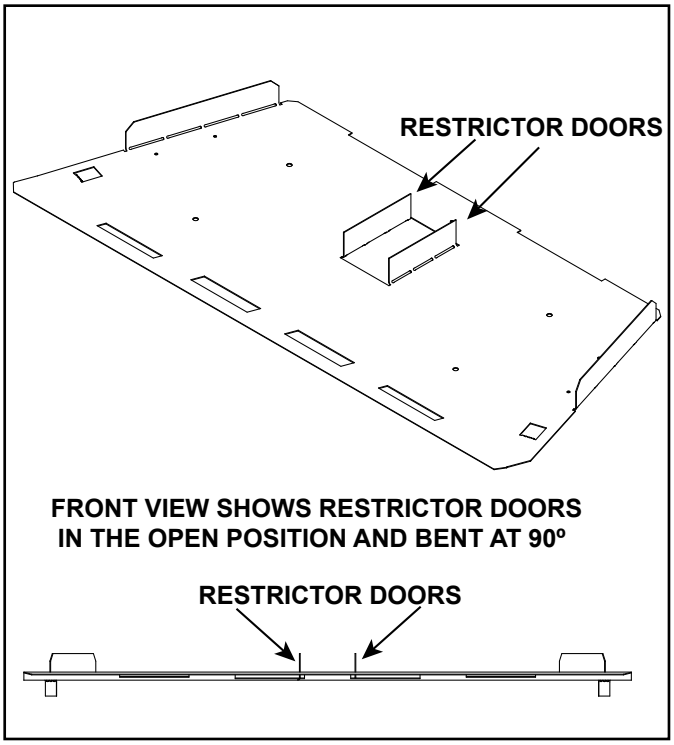

Figure 9.3 Firebox Baffle with Restrictor Doors Open

C. Clean the Appliance

Clean/vacuum any sawdust that may have accumulated inside the firebox or underneath in the control cavity.

D. Accessories

Install approved accessories per instructions included with accessories. Contact your dealer for a list of approved accessories.

WARNING! Risk of Fire and Electric Shock! *Use ONLY Hearth & Home Technologies-approved optional accessories with this appliance. Using non-listed accessories could result in a safety hazard and will void the warranty.*

E. Glass Media Placement

⚠ WARNING

Risk Of Explosion.

- Place media according to instructions.
- Do NOT place media in a position that pieces can fall into the area in front of pilot or air shutter.
- Do NOT use any media other than the media supplied with this appliance.

Fireplace will not function properly. Delayed ignition could occur.

WARNING! Choking Hazard! *Keep glass media out of reach of children.*

Glass media is shipped with this gas appliance.

- Place glass media as a part of the log installation process as shown in Section 9.G of this manual.
- Place media in zones as shown in section 9.G Log Placement Instructions. Figure 9.6, which shows the media placement zones, is for reference only.
- Two 5-pound bags of media are shipped with this appliance. Approximately 7.5 pounds will be used for the installation. Save the remaining media for use during appliance servicing.

NOTICE: *Excessive media usage could result in elevated component temperatures.*

- Proper media placement will reduce chances of the light from being projected onto refractory panels and other surfaces.

F. Glowing Embers Placement

WARNING! Risk of Explosion!

- ***DO NOT place embers outside of the ember zone. Improperly placed embers interfere with proper burner operation.***
- ***Place embers according to instructions.***
- ***Replace ember material annually.***

Ember material is shipped with this gas appliance.

- Place embers as part of the log placement process as shown in Section 9.G of this manual. Figure 9.6, which shows the zone allowed for ember placement, is for reference only.
- The embers must be placed loosely over the port holes, not pressed down on or into the holes. Create a single layer, no more than 1/4 inch thick.
- Failure to follow this procedure could cause ignition issues.
- Save the remaining ember materials for use during appliance servicing. The embers provided should be enough for 3 to 5 applications.

For reference only. Follow instructions for media and ember placement in Section 9.G.

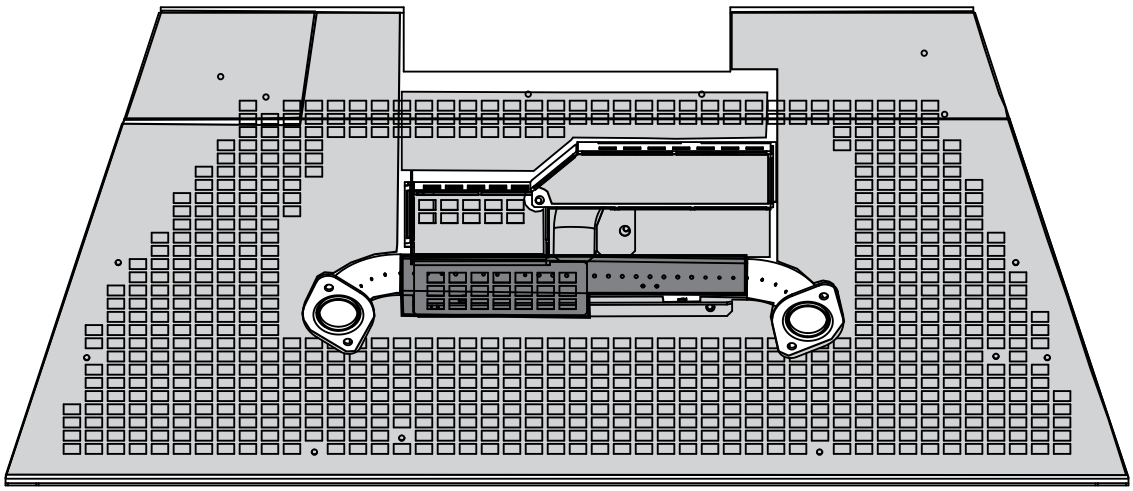

EMBERS ONLY-NO MEDIA

MEDIA-NO EMBERS

Figure 9.6 Ember and Glass Media Placement Zones

LOGS-2696, LOGS-2696-BIRCH

MODELS: SUPREMEX-I30, SUPREMEX-I30BIR
RUBYP30IN, RUBYP30IL, RUBYP30IN-BIR

Installation Instructions

Leave this manual with party responsible for use and operation.

CAUTION! Risk of Cuts or Abrasions. *Wear protective gloves and safety glasses during installation.*

CAUTION: Logs are fragile, handle with care.

NOTICE: To simplify the installation process, use Figure 1.A and 1.B to positively identify each individual log before beginning installation.

LOG SERVICE PARTS		
LOG ID	SUPREMEX-I30 RUBYP30IL / IN	SUPREMEX-I30BIR RUBYP30IN-BIR
	SRV PART #	SRV PART #
1	SRV2696-701	LOGS-2696-BIRCH
2	SRV2696-702	LOGS-2696-BIRCH
3	SRV2696-703	LOGS-2696-BIRCH
4	SRV2696-704	SRV2696-704
5	SRV2696-705	LOGS-2696-BIRCH
6	SRV2696-706	LOGS-2696-BIRCH
7	SRV2696-707	LOGS-2696-BIRCH
8	SRV2696-708	LOGS-2696-BIRCH

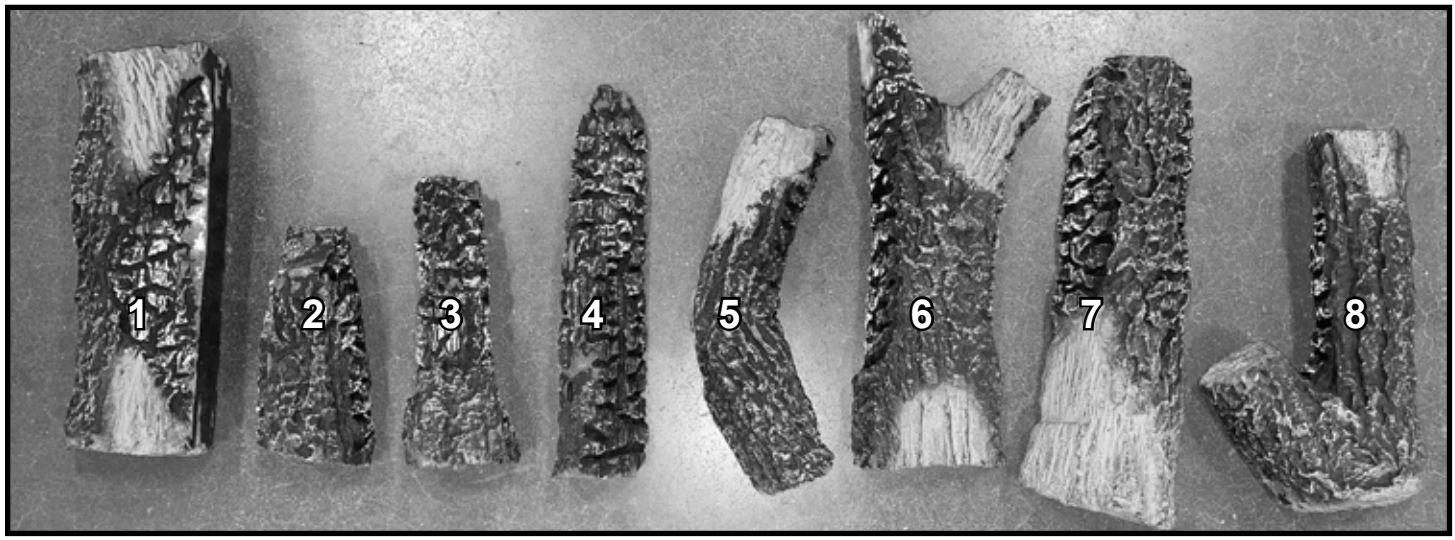

Figure 1.A Log Identification - Oak (LOGS-2696)

Figure 1.B Log Identification - Birch (LOGS-2696-BIRCH)

LOG #1: Center Log #1 left to right on the air scoop and move it back until it contacts the back wall. See Figure 3.

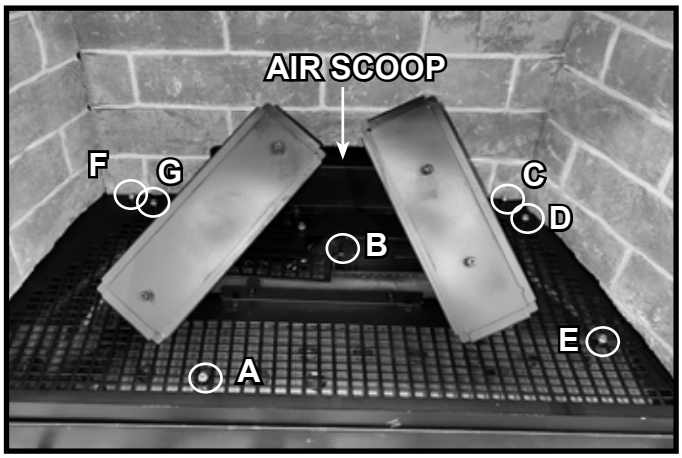

Figure 2 Log Pin Locations

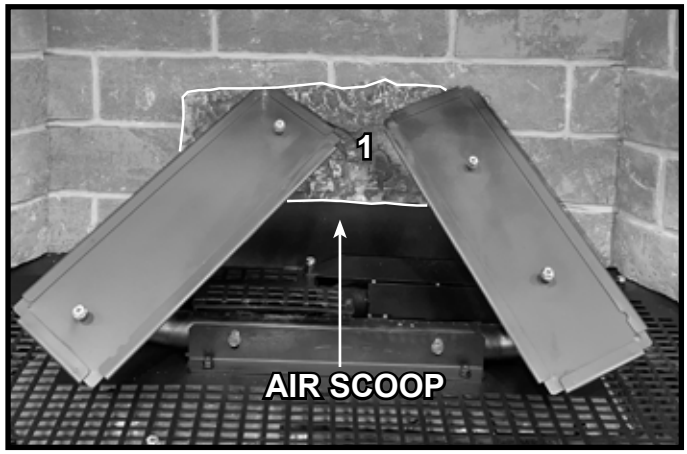

Figure 3 Log #1 Installed

LOG #2: Position the wide end of Log #2 against Log pin A and the media lip. Rotate the narrow end of the log counterclockwise until it contacts the burner bracket. The three points of contact are noted in Figure 4.

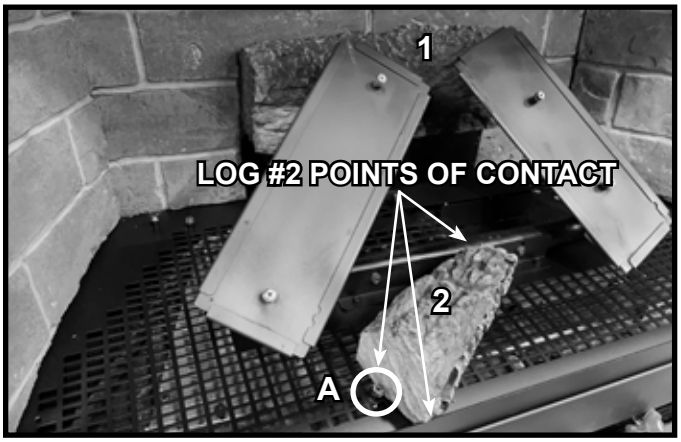

Figure 4 Log #2 Installed

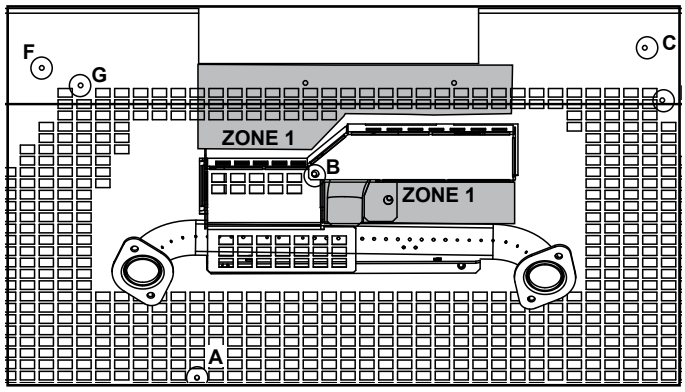

Figure 5 Zone 1 Media Placement

MEDIA: Fill the areas marked "Zone 1" in Figure 5 with media. Placement of media at this point will aid in the ease of placement for Log #3.

Glass Media Placement

⚠ WARNING

Risk Of Explosion.

- Place media according to instructions.
- Do NOT place media in a position that pieces can fall into the area in front of pilot or air shutter.
- Do NOT use any media other than the media supplied with this appliance.

Fireplace will not function properly. Delayed ignition could occur.

WARNING! Choking Hazard! *Keep glass media out of reach of children.*

NOTICE: *Ensure no media is in a position that it may slide or fall onto the burner. Lighting and flame performance could be affected.*

Glass media is shipped with this gas appliance.

- Place media in zones as shown in this instruction. Complete coverage of the base pan with no open space is necessary for optimum flame performance.
- Two 5-pound bags of media are shipped with this appliance. Approximately 7.5 pounds will be used for the installation. Save the remaining media for use during appliance servicing.

NOTICE: *Excessive media usage could result in elevated component temperatures.*

- If light is projected on surfaces such as refractory panels, adjust the media at the source of the light leakage.

LOG #3: Position the narrow end of Log #3 on the flat spot of Log #2. The other end of Log #3 will contact Log pin B and it will make contact with Log #1. See Figure 6.

MEDIA: Place some of the media on top of the pilot shield assembly in the areas marked “Zone 2” in Figure 7.

NOTICE: *Ensure no media is in a position that it may slide or fall onto the burner. Lighting and flame performance could be affected.*

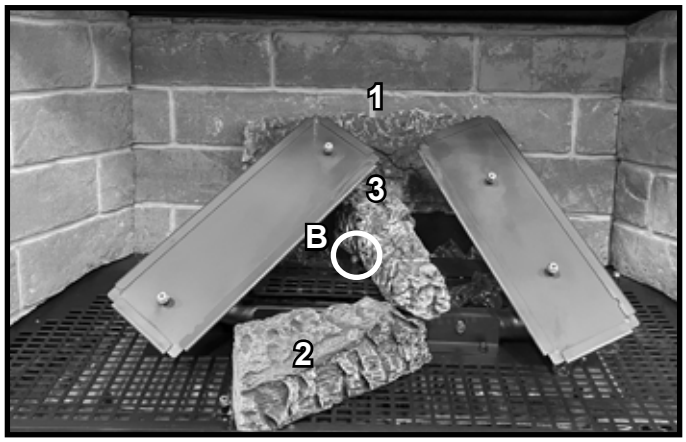

Figure 6 Log #3 Installed

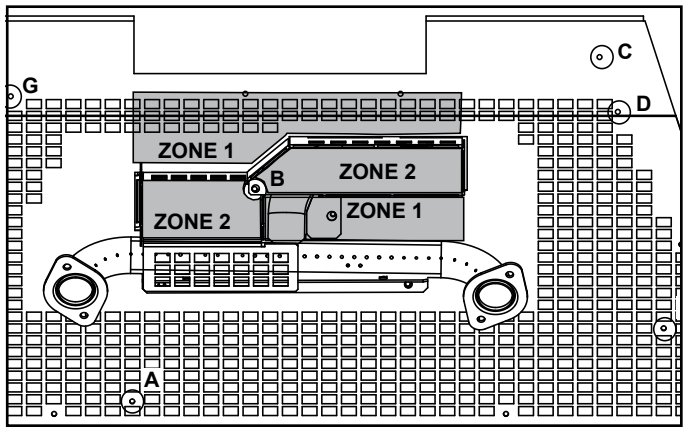

Figure 7 Zone 2 Media Placement

LOG #4: Position Log #4 from the right side as shown in Figure 8. Rest the pointed end on Log #3. Rotate the right side of the log counterclockwise until it contacts Log pin C and Log Pin D and Log #1. See Figure 9.

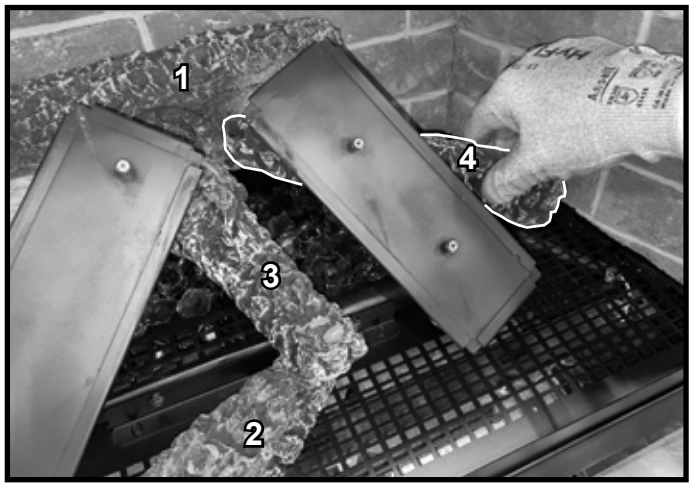

Figure 8 Position Log #4

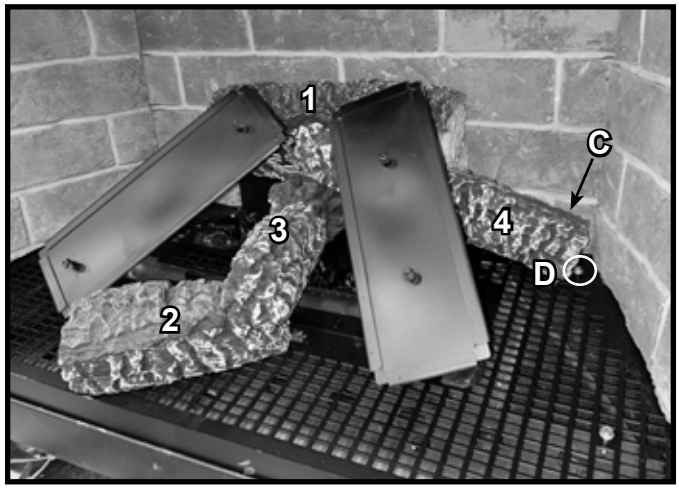

Figure 9 Log #4 Installed

LOG #5: Place Log #5 against Log Pin E and on the flat area of Log #4 as shown in Figure 10.

MEDIA: Place media on the right side, along the front of the base pan and on the part of the left side noted as Zone 3 in Figure 11.

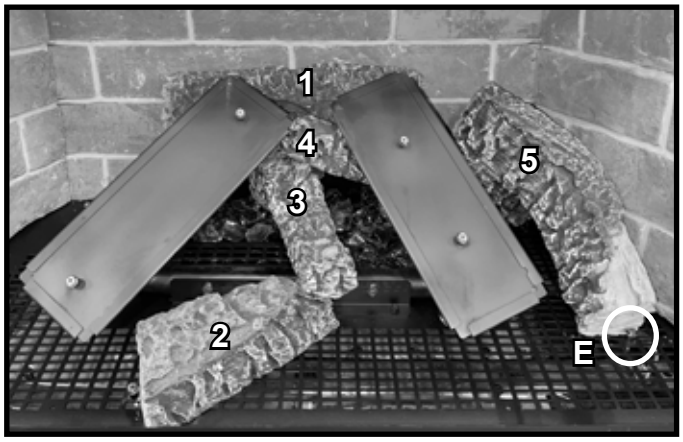

Figure 10 Log #5 Installed

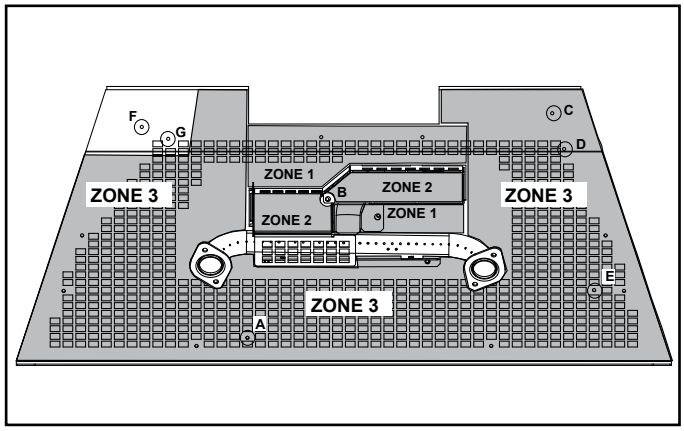

Figure 11 Zone 3 Media Placement

LOG #6: Log #6 has a pin hole and a slot on the bottom of the log. See Figure 12. Engage the pin hole and the slot with the pins on the right side burner pan as shown in Figure 13. The Y-end of the log is placed at the top of the burner.

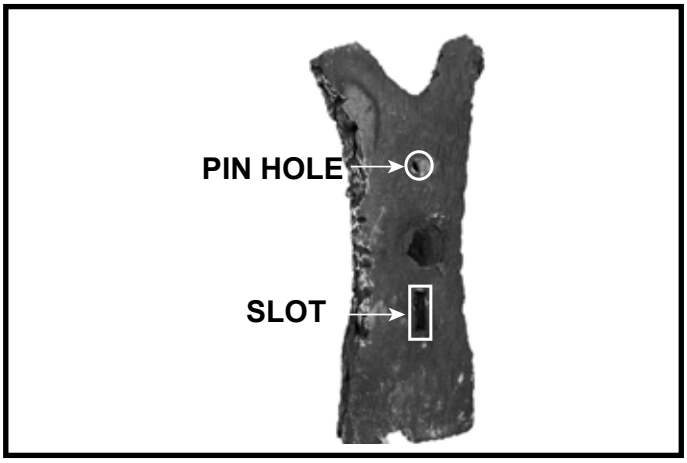

Figure 12 Log #6 Pin Hole and Slot

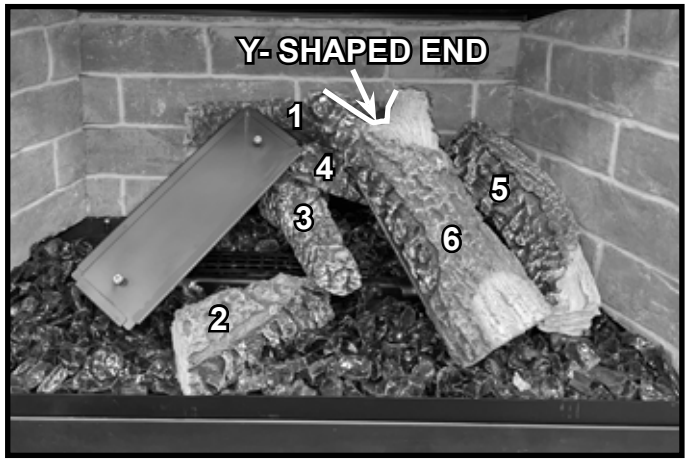

Figure 13 Log #6 Installed

LOG #7: Log #7 has a pin hole and a slot on the bottom of the log. See Figure 14. Engage the pin hole and the slot with the pins on the left side burner pan as shown in Figure 15. Ensure the larger end of the log is placed at the bottom of the burner.

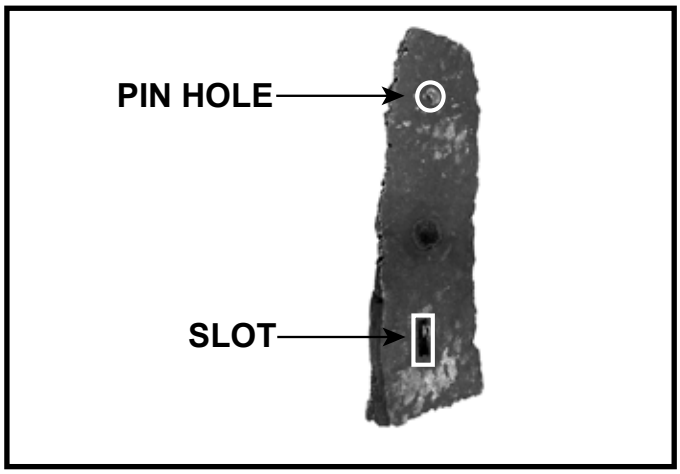

Figure 14 Log #7 Pin Hole and Slot

Figure 15 Log #7 Installed

LOG #8: Position Log #8 with the flat area, shown in Figure 16, seated flat on the base pan. Log #8 will contact Log Pin F and Log Pin G. The forked side of the log will be positioned so that the longer fork is seated on the notch on Log #7. See Figure 17.

MEDIA: Place media in Zone 4 as indicated in Figure 18.

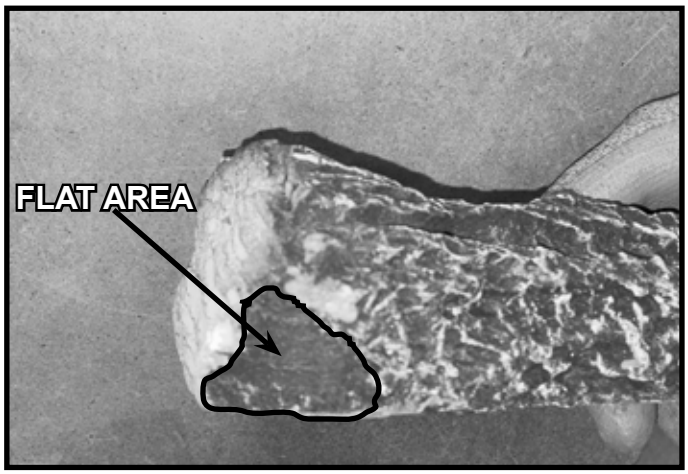

Figure 16 Log #8 Flat Area on Bottom

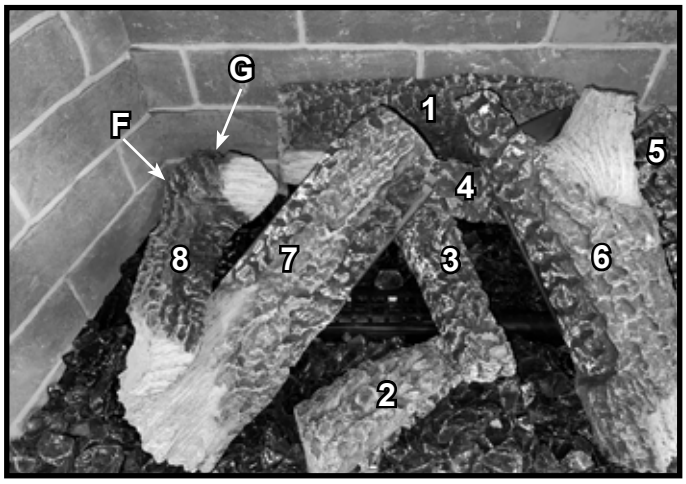

Figure 17 Log #8 Installed

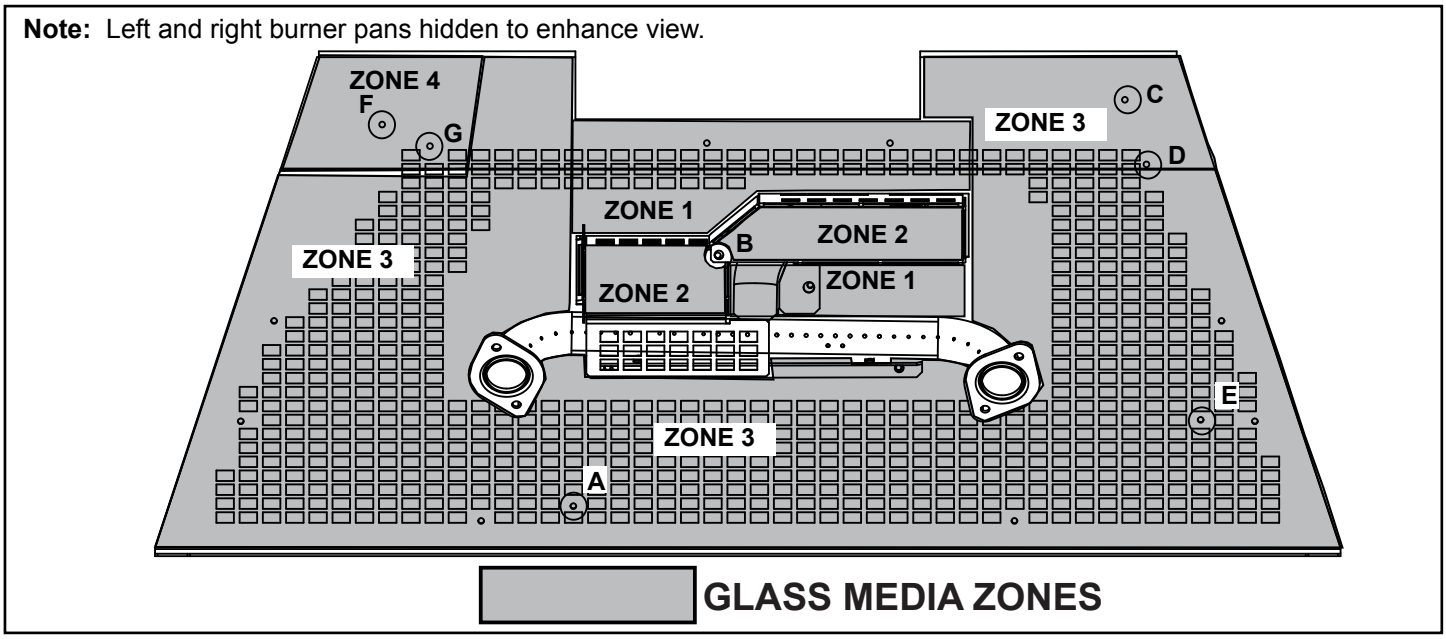

Figure 18 Zone 4 Media Installed

Glowing Embers Placement

WARNING! Risk of Explosion!

- ***DO NOT place embers outside of the ember zone. Improperly placed embers interfere with proper burner operation.***
- ***Place embers according to instructions.***
- ***Replace ember material annually.***

Ember material is shipped with this gas appliance. To place the ember material:

- Place dime-size embers in the ember zone as shown in Figure 19. The embers must be placed loosely over the port holes and pilot shield. Do not press embers down or into the holes. Create a single layer, no more than 1/4 inch thick.
- Embers are not allowed in gray zone noted in Figure 20. Failure to follow this procedure could cause ignition issues.
- Save the remaining ember materials for use during appliance servicing. The embers provided should be enough for 3 to 5 applications.

NOTICE: *For Propane applications, embers must be applied in a thin, light layer in the portion of the zone indicated in Figure 19.*

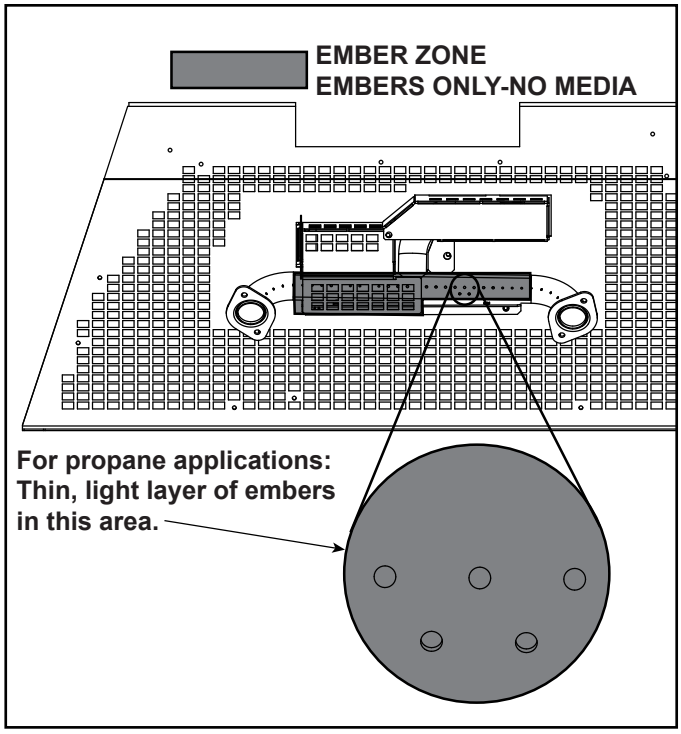

Figure 19 Ember Zone

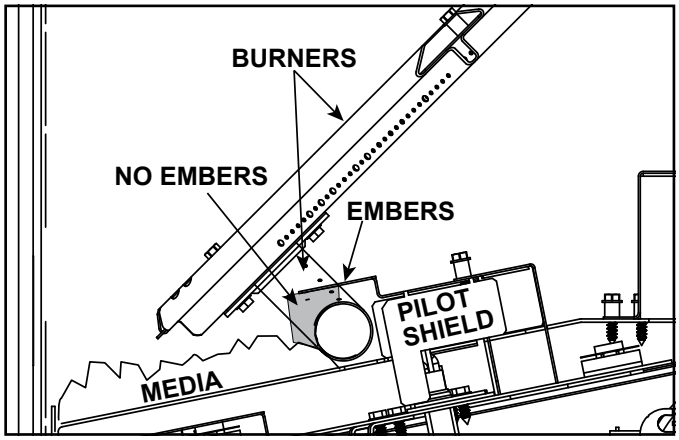

Figure 20 Embers Not Allowed - Side View

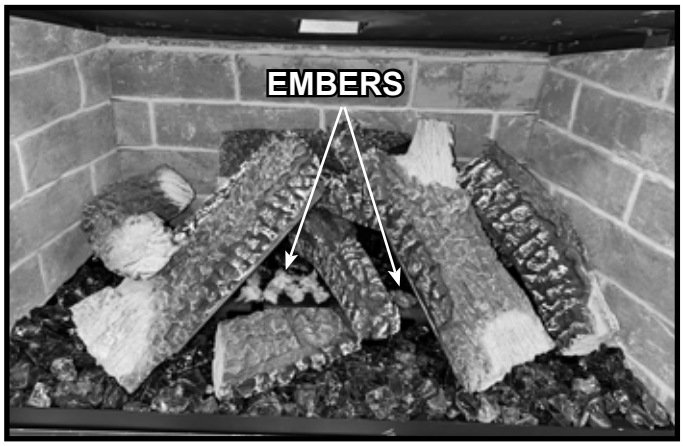

Figure 21 Traditional Logs, Media and Glowing Embers Installed

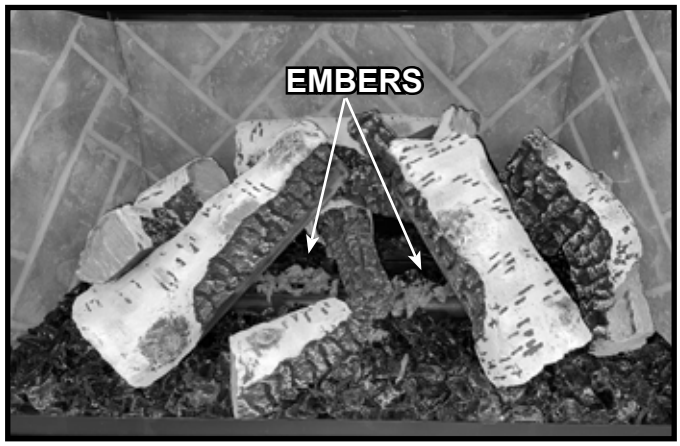

Figure 22 Birch Logs, Media and Glowing Embers Installed

2696-935B

H. Install Decorative Barrier Front and Surround

A decorative barrier front and surround is required to complete this installation. Installation instructions are included with the decorative barrier front and surround. Consult your dealer for a list of decorative barrier front and surround options.

WARNING! Risk of Fire! *Install ONLY decorative fronts approved by Hearth & Home Technologies. Unapproved decorative fronts may cause fireplace to overheat.*

This fireplace has been supplied with an integral barrier to prevent direct contact with the fixed glass panel. DO NOT operate the fireplace with the barrier removed.

Contact your dealer or Hearth & Home Technologies if the barrier is not present or help is needed to properly install one.

For more information refer to the instructions supplied with your decorative barrier front.

See Figure 9.7 for Reset Switch Detail. The Reset Switch included with the surround needs to be wired to the appliance. Reference front/surround instructions (included with the decorative barrier front) and wiring diagram in Figure 6.2.

- Reset switch must be installed and in the “ON” position for appliance to operate.

NOTE: For on site custom surround details, see instructions included with the surround.

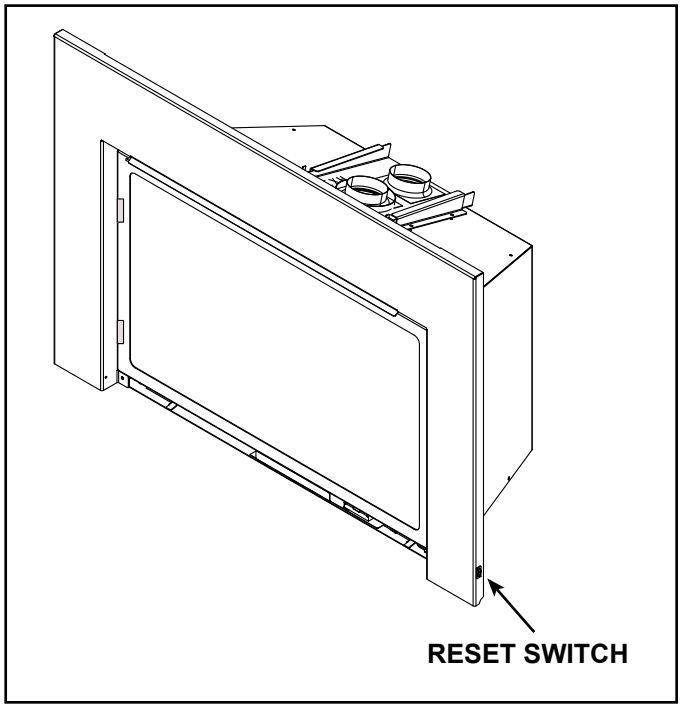

Figure 9.7 Surround Reset Switch

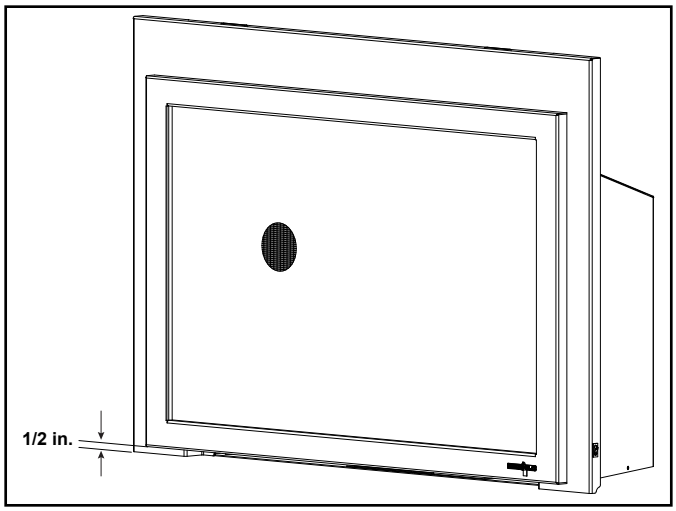

Figure 9.8 Required 1/2 in. Gap

NOTICE: *1/2 inch gap must be maintained or components will overheat.*

I. Appliance Break-In

NOTICE! Open windows for air circulation during fireplace break-in.

- *Some people may be sensitive to smoke and odors.*
- *Smoke detectors may activate.*

Follow the initial break-in procedure below to cure the materials used to manufacture the fireplace and the finishing materials around it.

- The fireplace should be run three to four hours continuously on high.
- Turn the fireplace off and allow it to cool completely.
- Remove fixed glass assembly. See Section 9.A.
- Clean fixed glass assembly. See Section 4 of Owner's manual.
- Verify Glass Seal Plate is properly installed. See Figure 9.A.

WARNING! Glass seal plate must be properly installed. *Risk of elevated component temps and carbon monoxide exposure.*

- Replace the fixed glass assembly.

Note: Some installations may require additional run time to cure. If odors persist after the initial break-in period, run the fireplace for an additional three to four hours continuously on high.

Note: The IFT 2.0 system has a safety feature that automatically shuts down the fireplace after 9 hours of continuous operation without receiving a command from the remote control. If this occurs, restart the appliance.

- Verify collar slide plate screw is attached see Figure 5.1.

J. Heat Management

Heat Output

Heat Output is managed through the IFT2-RC450 remote control that comes standard with the fireplace.

- Turn the appliance on and off.
- Adjust the height of the flame by varying the input using the remote control.
- Adjust the fan speed.

For more information, see the instructions that accompany the remote control.

10 Reference Materials

A. Vent Components

Direct Vent Flex Liner Kits (see Figure 10.1)

LINK-DV30B: Masonry 3 inch flex liner kit. Expands to 30 feet. Includes: two liners, termination cap and flashing.

LINK-DV4-30B: Masonry 3 inch flex liner kit. Expands to 30 feet and 4 feet respectively. Includes: two liners, termination cap and flashing.

LINKSQC-DV30, LINKSQB-DV30: Masonry 3 inch flex liner kit. Expands to 30 feet. Includes: two liners, termination cap and flashing.

LINKSQC-DV4-30, LINKSQB-DV4-30: Masonry 3 inch flex liner kit. Expands to 30 feet and 4 feet respectively. Includes: two liners, termination cap and flashing.

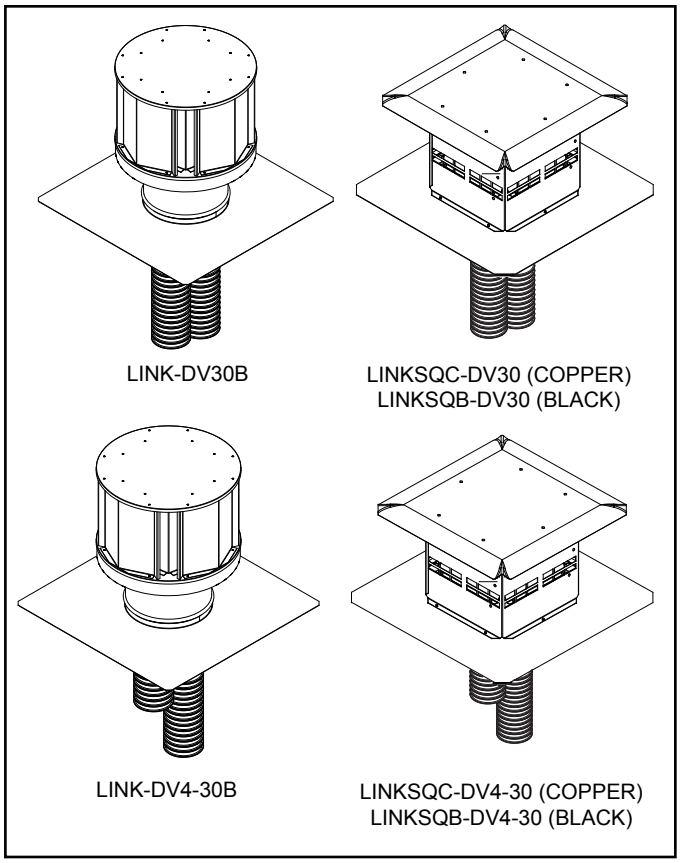

Figure 10.1 Direct Vent Flex Liner Kits

Direct Vent Flex Liner Accessory Kits. See Figure 10.2.

LINK-ZC-ADPB: Zero clearance chimney adapter

DV-46DVA-GK: Adapter kit - It is permissible to use DV-46DVA-GK to connect colinear flex vent to SLP vent pipe to extend the run.

FLEX3-30: One 3 inch flexible liner expands to 30 feet.

FLEX-CNCT: Connector kit - 3 inch liner to 3 inch liner, one connector per kit.

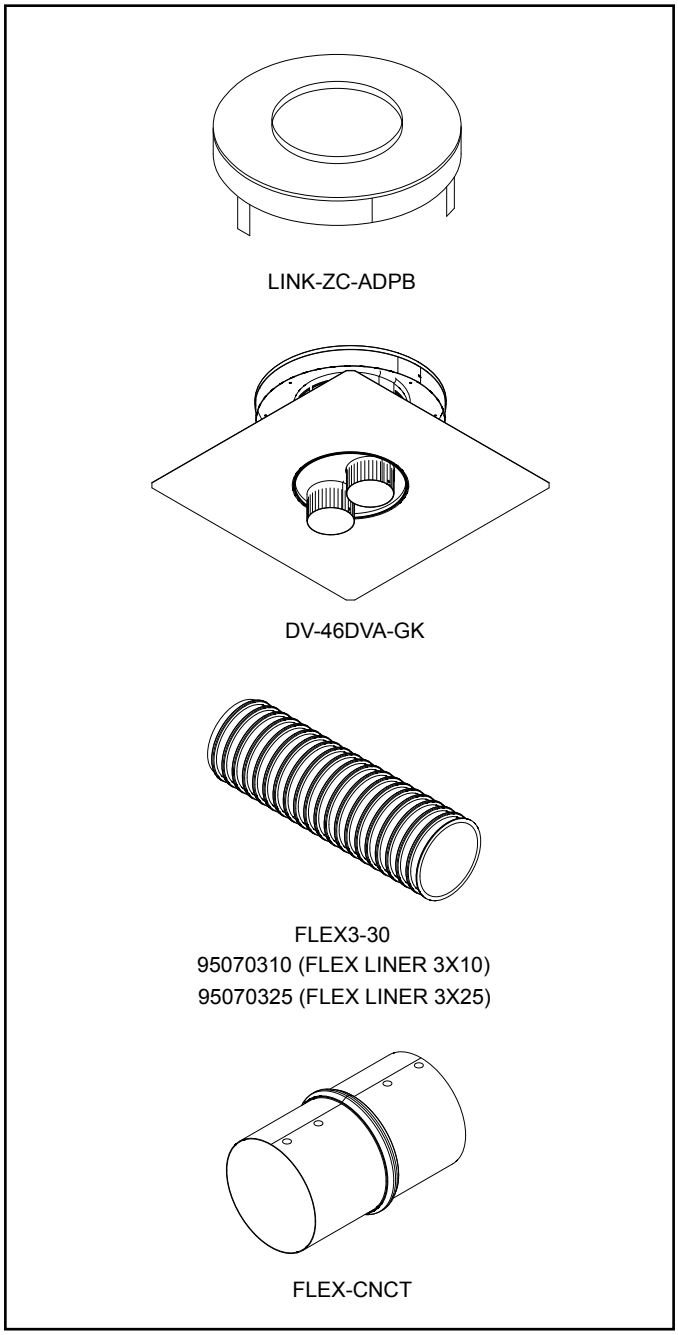

Figure 10.2 Direct Vent Flex Liner Accessory Kits

Reference price book for SLP components.

Note: No Horizontal Termination allowed.

B. Accessories

WARNING! Risk of Fire and Electric Shock! *Use ONLY Hearth & Home Technologies-approved optional accessories with this appliance. Using non-listed accessories could result in a safety hazard and will void the warranty.*

Contact your dealer for more information and details, such as color options and specific quantities required, on individual accessories. A qualified service technician must install the approved accessories. Operate installed accessories according to the included instructions.

Note: Some optional accessories must be installed at the time of appliance installation. See Section 2.A.

Options:

Remote Controls, Wall Controls and Wall Switches	
IFT2-RC450	IntelliFire Touch remote control (shipped standard)
IFT-RC150U	IntelliFire Touch wireless wall switch
IntelliFire Wi-Fi module with IntelliFire App	
IFT-WFM	IntelliFire Wi-Fi module for app
Refractory Kits	
BRICKMI30CR / BRICKMI30TB	Fiber Refractory
LINER-BK-30	Black Glass Liner
Fan	
GFK-160C	Fan Kit 160 CFM (Fan only)
GFK-160A	Fan Kit 160 CFM (Includes rheostat and temperature sensor)
Fronts/Surrounds (Required for Operation)	
MI30-4027-BK/NB	Surround-Small
MI30-4230D-BK	Surround-Medium (Deep)
MI30-4230-BK/NB	Surround-Medium
MI30-4432-BK/NB	Surround-Large
MI30-5040CS-BK	On-Site Custom Surround
CUST-SRND-MI	Contact dealer to order.
CSFI30BK / CSFI30NB	Clean Screen Front
CASFI30BK / CASFI30NB	Contemporary Arch Front
INFIT-30-BK	Inside Fit Front
Other Accessories	
MI-USBC-RELO	Relocation Kit for USB-C and reset switch
BATTERY-WSK	Battery Backup Wall Switch Kit

C. QR Codes

Instructions for components that are required or shipped standard with the appliance and optional accessories can be viewed by scanning the QR codes below.

Required / Shipped Standard

FRONT/SURROUND INSTRUCTION

RC450 USER GUIDE

LOGS, MEDIA, EMBERS INSTALLATION

Optional Accessories

On-Site Custom Surround

REFRACTORY INSTALLATION (Glass Liner)

REFRACTORY INSTALLATION (Brick)

Majestic, a brand of Hearth & Home Technologies
7571 215th Street West, Lakeville, MN 55044
www.majesticproducts.com

Please contact your Majestic dealer with any questions or concerns.
For the location of your nearest Majestic dealer,
please visit www.majesticproducts.com.

Printed in U.S.A. - Copyright 2025