Form No. 3447-975 Rev A

60in or 72in Recycler® Kit

Model No. 139-6655

Model No. 139-6659

Installation Instructions

Important: **This kit does not come with the recycler blades.**

Loose Parts

Use the chart below to verify that all parts have been shipped.

Procedure	Description	Qty.	Use
1	No parts required	–	Raise the mower for access (GrandStand mowers only).
2	No parts required	–	Prepare the machine.
3	No parts required	–	Remove the existing baffles (for mower decks with existing baffles).
4	No parts required	–	Remove the deck fasteners and discharge baffle (for Z Master 4000 mower deck).
5	No parts required	–	Remove the existing discharge chute.
6	No parts required	–	Drill holes (for G3 mower decks).
7	Discharge plate Cover plate Carriage bolt (3/8 x 1-1/4 inches) Carriage bolt (5/16 x 7/8 inch) Small flange nut (3/8 inch) Flange nut (5/16 inch) Large flange nut (3/8 inch) Carriage bolt (3/8 x 1 inch)	1 1 2 1 2 1 2 2	Install the discharge plate.
8	Left baffle Center baffle Right baffle Small flange nut (3/8 inch) Carriage bolt (3/8 x 1 inch) Bolt (3/8 x 1 inch) Large flange nut (3/8 inch)	1 1 1 7 6 2 1	Install the baffles.
9	Kickers Carriage bolt (5/16 x 7/8 inch) Locknut (5/16 inch)	2 4 4	Install the kickers (for 72-inch mower decks).
10	No parts required	–	Tighten all the fasteners.
11	Recycler blade (sold separately)	3	Install the recycler blades.

© 2021—The Toro® Company
8111 Lyndale Avenue South
Bloomington, MN 55420

Register at www.Toro.com.

Original Instructions (EN)
Printed in the USA
All Rights Reserved

3447-975

1

Raising the Mower for Access

GrandStand Mowers Only

No Parts Required

Procedure

You can raise the front of the mower and support to access under the machine for maintenance.

⚠ WARNING

The machine could fall onto someone and cause serious injury or death.

- **Always shut off the engine, engage the parking brake, and remove the key before performing any maintenance on the mower.**
- **Use extreme caution when the machine is raised and supported on its back. The blades and moving parts are exposed and could cause injury.**
- **Use this position only for cleaning, removing blades or baffles, and maintenance.**

1. Park the machine on a level surface, disengage the PTO, and engage the parking brake.
2. Shut off the engine, remove the key, and wait for all moving parts to stop before leaving the operating position.
3. Remove the battery from the machine; refer to the *Operator's Manual*.
4. Raise the mower deck to the highest position.
5. Drain the fuel from the fuel tank; refer to Draining the Fuel Tank in the *Operator's Manual*.
6. Remove the hydraulic-tank cap and place a piece of plastic over the opening and install the cap.

   This seals the hydraulic tank and prevents fluid from leaking.

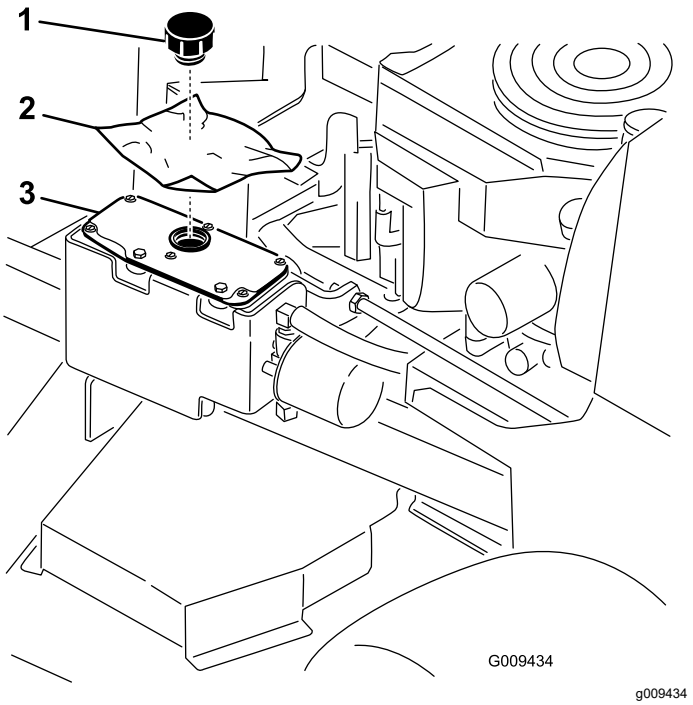

Figure 1

Grandstand mowers only

1. Cap
2. Piece of plastic
3. Hydraulic tank

7. With 2 people, raise the front of the mower so that it rests on the drive tires and with the platform in the upright position.

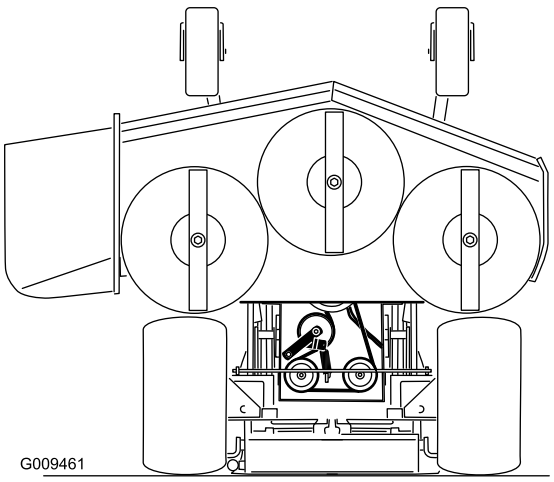

Figure 2

GrandStand mowers only

1. Ensure that you remove the battery.
2. With two people, lift the front end of the mower (ensure the mower deck is in the highest position)

2

Preparing the Machine

No Parts Required

Procedure

1. Disengage the PTO, move the motion-control levers to the NEUTRAL-LOCK position, and engage the parking brake.
2. Shut off the engine, remove the key, and wait for all moving parts to stop before leaving the operating position.
3. Repair all bent or damaged areas of mower deck and replace any missing parts.
4. Clean the machine of any debris on the deck to ease installation.
5. Remove the existing blades; refer to the *Operator's Manual*.

3

Removing the Existing Baffles

For Mower Decks with Existing Baffles

No Parts Required

Procedure

Note: Remove the nuts first before removing bolts.

1. Remove the flange nuts holding the baffles in place (Figure 3).
2. Remove the cam lock and washer by unscrewing it from the adjustable flow baffle (Figure 3).

   Note: For certain models of mower decks, remove the nut, knob, and washer if a cam lock is not present.
3. Remove the bolts holding the baffles in place (Figure 3).

   Note: Save the baffles and hardware.
4. After removing the discharge baffle, install the nuts and bolts back into the mower deck (Figure 3).

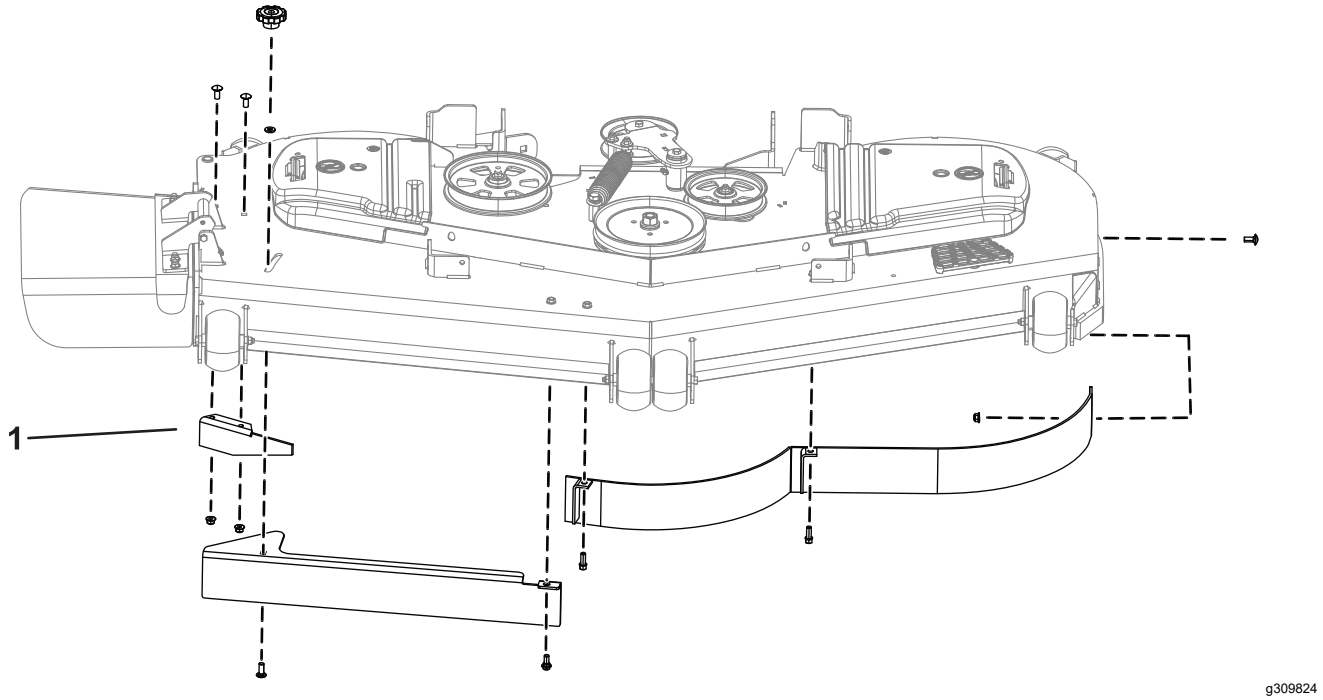

Figure 3

1. Discharge baffle

4

Removing the Deck Fasteners and Discharge Baffle

For Z Master 4000 Mower Decks

No Parts Required

Procedure

Remove the 6 carriage bolts (3/8 x 7/8 inch), 6 locknuts (3/8 inch), and discharge baffle from the mower deck (Figure 4).

After removing the discharge baffle, install the 2 carriage bolts (3/8 x 7/8 inch) and 2 locknuts (3/8 inch) back into the mower deck (Figure 4).

Retain the fasteners and discharge baffle for converting back to side discharge.

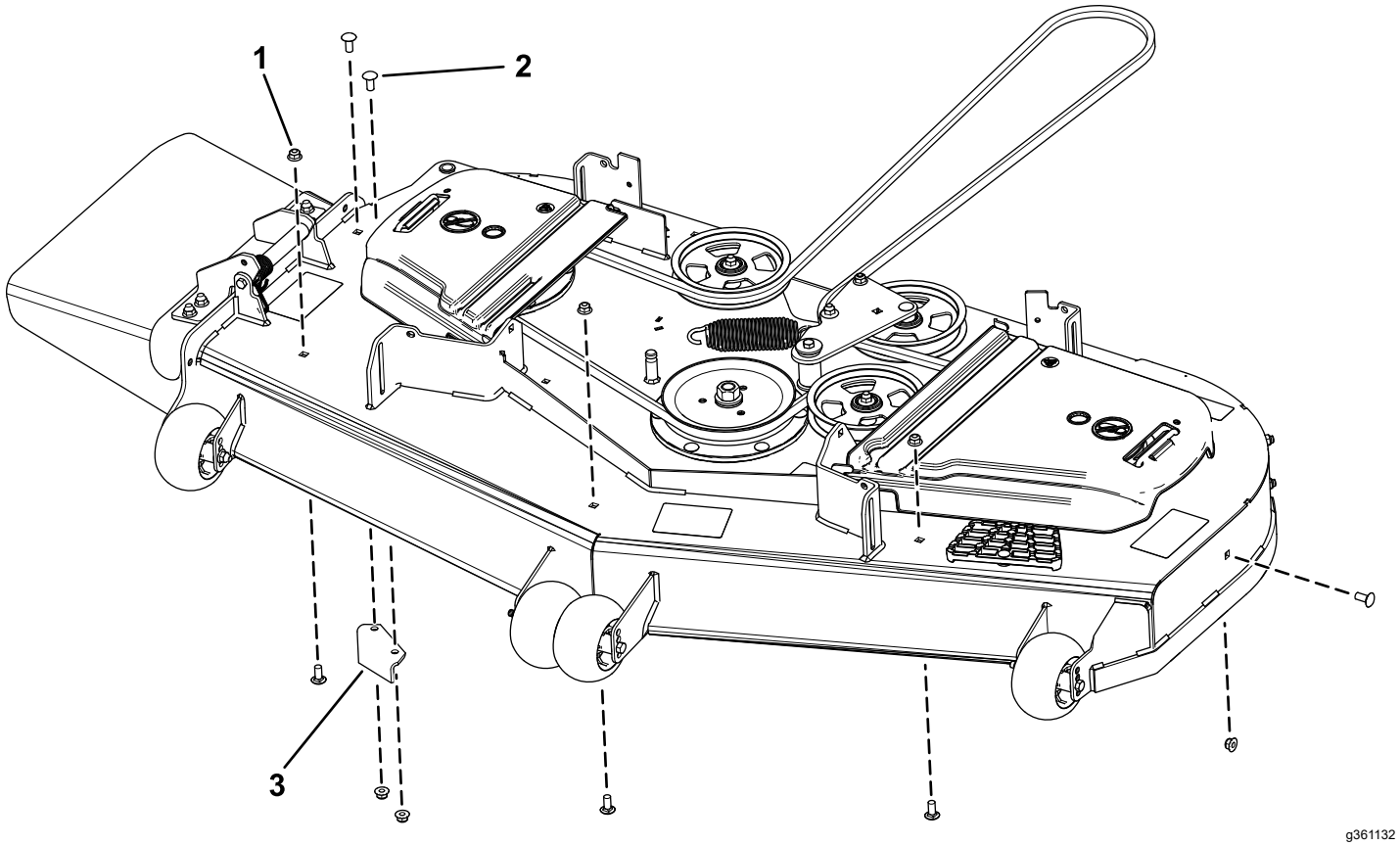

Figure 4

1. Locknut (3/8 inch)
2. Carriage bolt (3/8 x 7/8 inch)
3. Discharge baffle

5

Removing the Existing Discharge Chute

No Parts Required

Procedure

1. Remove the locknut, bolt, spring, and spacer holding the deflector to the pivot brackets (Figure 5).
2. Remove the grass deflector (Figure 5).

   Note: Retain the hardware that you removed during this procedure so that it is available for changeover.

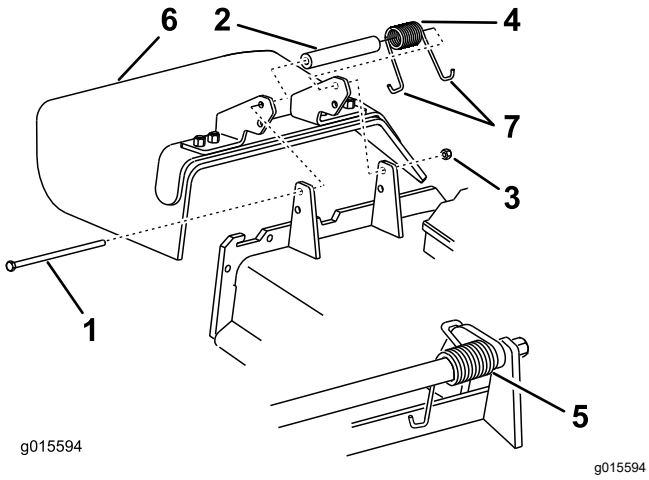

Figure 5

1. Bolt
2. Spacer
3. Locknut
4. Spring
5. Spring installed
6. Grass deflector
7. J-hook end of spring

6

Drilling Holes

For G3 Mower Decks

No Parts Required

Procedure

1. Check the hole diameters in the locations shown in Figure 6.
2. Drill the holes to the specified diameter in the locations shown in Figure 6.

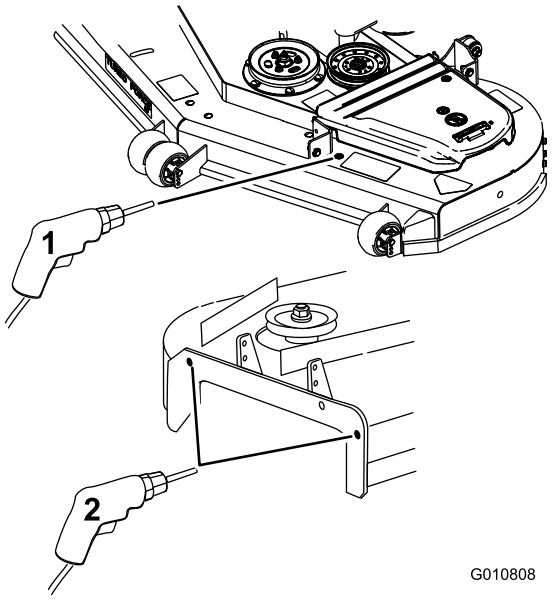

Figure 6

1. Drill this hole to 3/8-inch diameter
2. Drill this hole to 7/16-inch diameter

7

Installing the Discharge and Cover Plate

Parts needed for this procedure:

1	Discharge plate
1	Cover plate
2	Carriage bolt (3/8 x 1-1/4 inches)
1	Carriage bolt (5/16 x 7/8 inch)
2	Small flange nut (3/8 inch)
1	Flange nut (5/16 inch)
2	Large flange nut (3/8 inch)
2	Carriage bolt (3/8 x 1 inch)

Procedure

1. Install the discharge plate to the outside of the mounting bracket with 2 carriage bolts (3/8 x 1-1/4 inches) and 2 small flange nuts (3/8 inch) as shown in Figure 7.
2. Install the tab to the inside of the mower deck with 1 carriage bolt (5/16 x 7/8 inch) and 1 small flange nut (5/16 inch) as shown in Figure 7.

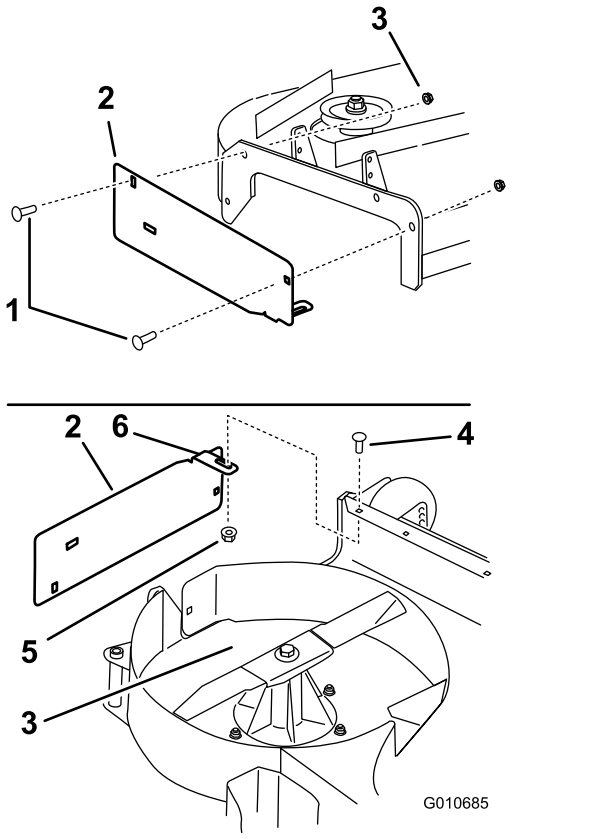

Figure 7

1. Carriage bolt (3/8 x 1-1/4 inches)
2. Discharge plate
3. Small flange nut (3/8 inch)
4. Carriage bolt (5/16 x 7/8 inch)
5. Flange nut (5/16 inch)
6. Ensure that the tab is positioned inside the mower deck.

3. If you have the slot shown in Figure 8, install the cover plate using 2 carriage bolts (3/8 x 1 inch) and 2 large flange nuts (3/8 inch).

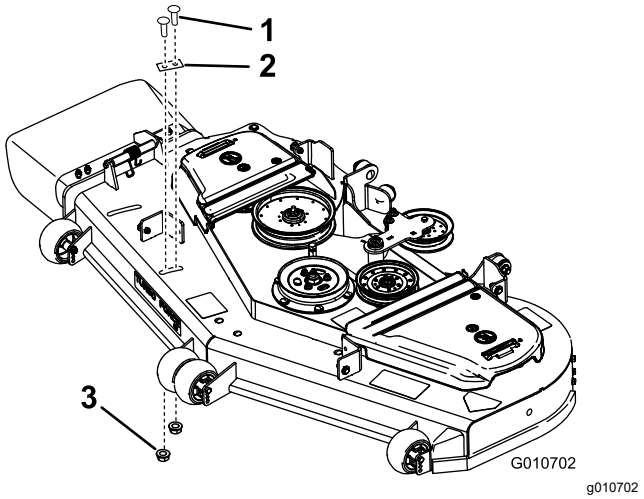

Figure 8

1. Carriage bolt (3/8 x 1 inch)
2. Cover plate
3. Large flange nut (3/8 inch)

8

Installing the Baffles

Parts needed for this procedure:

1	Left baffle
1	Center baffle
1	Right baffle
7	Small flange nut (3/8 inch)
6	Carriage bolt (3/8 x 1 inch)
2	Bolt (3/8 x 1 inch)
1	Large flange nut (3/8 inch)

Procedure

Note: Loosely install the baffles to align the baffles with all holes in the mower (Figure 9).

1. Position the right baffle into the mower.
2. Loosely install the right baffle to the discharge plate with 1 carriage bolt (3/8 x 1 inch) and a small flange nut (3/8 inch) as shown in Figure 9.
3. Loosely install the right baffle to the top of the mower deck with 1 carriage bolt (3/8 x 1 inch) and 1 large flange nut (3/8 inch) as shown in Figure 9.
4. Loosely install the right baffle to the mower deck with 1 carriage bolt (3/8 x 1 inch) and 1 small flange nut (3/8 inch) as shown in Figure 9.
5. Position the left baffle into the mower.
6. Loosely install the left baffle to the top of the mower deck with 1 bolt (3/8 x 1 inch) and 1 small flange nut (3/8 inch) as shown in Figure 9.
7. Loosely install the left baffle to the mower deck with 2 carriage bolts (3/8 x 1 inch) and 2 small flange nuts (3/8 inch) as shown in Figure 9.
8. Position the center baffle into the mower.
9. Loosely install the center baffle to the left baffle with 1 carriage bolt (3/8 x 1 inch) and 1 small flange nut (3/8 inch) as shown in Figure 9.

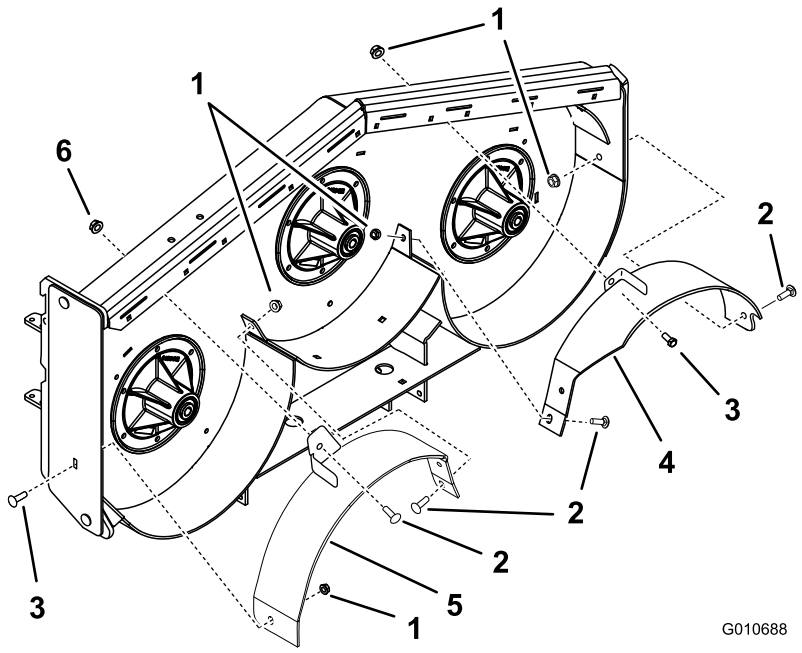

g010688

Figure 9

1. Small flange nut (3/8 inch)
2. Carriage bolt (3/8 x 1 inch)
3. Bolt (3/8 x 1 inch)
4. Left baffle
5. Right baffle
6. Large flange nut (3/8 inch)

10. Loosely install the center baffle to the right baffle with 1 carriage bolt (3/8 x 1 inch) and 1 small flange nut (3/8 inch) as shown in Figure 10.
11. Loosely install the center baffle to the top of the mower deck with 1 bolt (3/8 x 1 inch) and 1 small flange nut (3/8 inch) as shown in Figure 10.

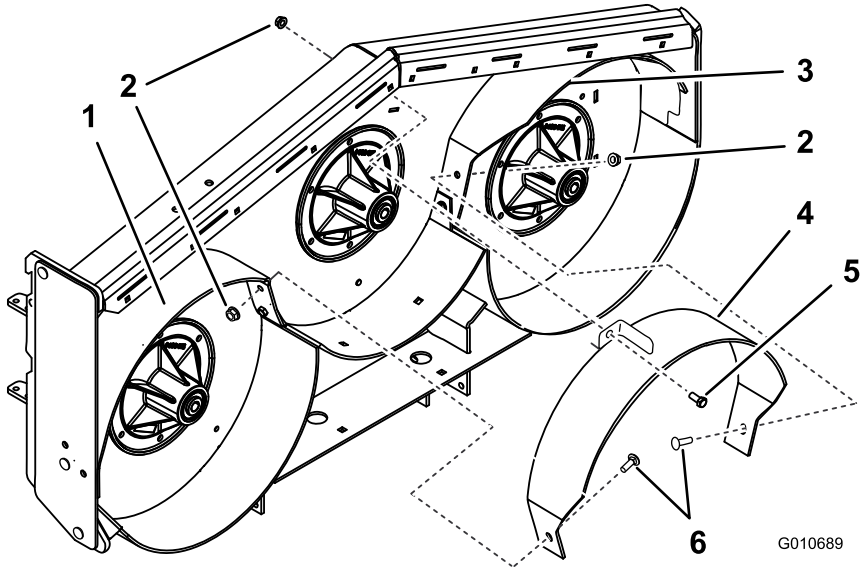

g010689

Figure 10

GrandStand mower deck shown

1. Right baffle
2. Small flange nut (3/8 inch)
3. Left baffle
4. Center baffle
5. Bolt (3/8 x 1 inch)
6. Carriage bolt (3/8 x 1 inch)

9

Installing the Kickers

For 72-inch Mower Decks

Parts needed for this procedure:

2	Kickers
4	Carriage bolt (5/16 x 7/8 inch)
4	Locknut (5/16 inch)

Procedure

Install and secure the kickers using 4 carriage bolts (5/16 x 7/8 inch) and 4 locknuts (5/16 inch) as shown in Figure 11.

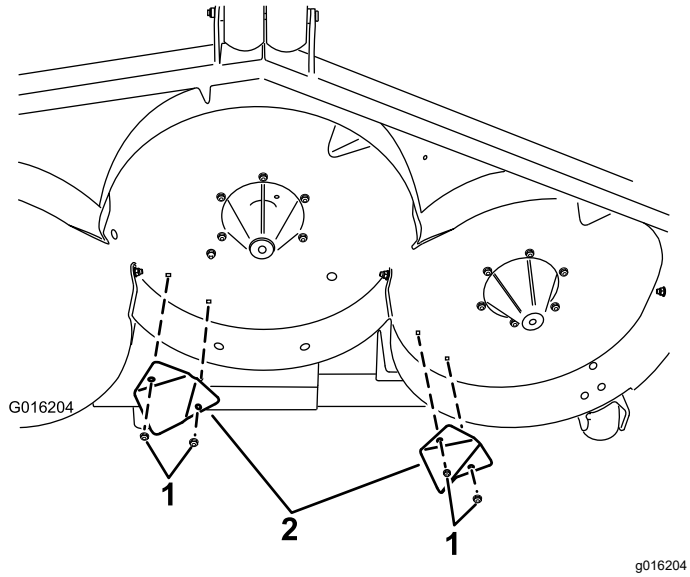

Figure 11

1. Carriage bolts (5/16 x 7/8 inch)
2. Kickers

10

Tightening all the Fasteners

No Parts Required

Procedure

1. Tighten all nuts and bolts for the baffles; refer to the Installing the Baffles sections.
2. **For GrandStand mowers,** lower the machine, remove the plastic from the hydraulic tank, and connect the battery.
3. **For GrandStand mowers,** place the battery onto the machine.
4. Secure the battery with the hold-down plate, J-bolts, and locknuts.
5. Install the positive (red) battery cable to positive (+) battery terminal with a nut, washer, and bolt.

   Slide the rubber cover over the post.
6. Install the negative battery cable and ground wire to the negative (-) battery terminal with a nut, washer, and bolt.

   Slide the rubber cover over the post.

11

Installing the Recycler Blades

Parts needed for this procedure:

3	Recycler blade (sold separately)

Procedure

1. Install the 3 recycler blades; refer to the *Operator's Manual*.
2. Rotate the blades and ensure that there is clearance between the blades and baffles.

   If there is interference, loosen the baffle and reposition it.

Notes:



Count on it.