SAVE THESE INSTRUCTIONS

M-1115S Series Fuel Pump

Owner's Manual

STOP

DO NOT RETURN THIS PRODUCT TO THE STORE!

Please contact GPI before returning any product. If you are missing parts or experience problems with your installation, our Customer Support Department will be happy to assist you.

GPI Customer Support
800-835-0113 or
316-686-7361

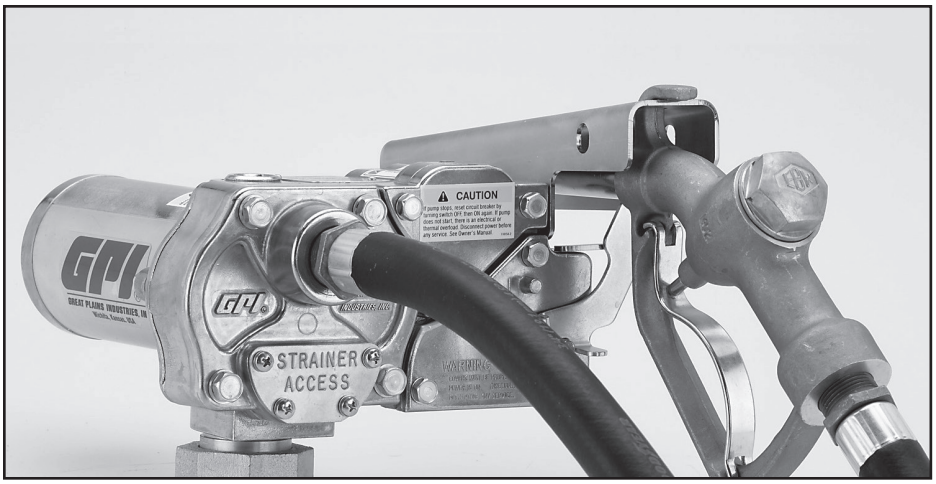

TABLE OF CONTENTS

General Information 2
Safety Instructions 2
Installation 3
Operation 4
Maintenance 5
Repair 5
Troubleshooting 9
Illustrated Parts List 10
Specifications 11
Parts and Service 11

PEI MEMBER

Great Plains Industries, Inc. is a member of the Petroleum Equipment Institute.

To the owner...

Congratulations on receiving your GPI fuel pump. We are pleased to provide you with a system designed to give you maximum reliability and efficiency.

Your fuel pump is designed, tested, and approved for use with gasoline (up to 15% alcohol blends such as E15), diesel fuel (up to 20% biodiesel blends such as B20) and kerosene. Please take all due precautions when handling these flammable liquids. Your safety is important to us.

Also, to assure the longest possible service life, it is important that you follow the operation and maintenance procedures outlined in this manual. We are proud to provide you with a quality product and dedicated support. Together with your conscientious use, we are sure that you will obtain years of safe, dependable service.

Victor Lukic
President
Great Plains Industries, Inc.

GENERAL INFORMATION

This manual will assist you in operating and maintaining your fuel pump. It furnishes information which will help you achieve years of dependable performance and trouble-free operation.

Please take a few moments to read through this manual before installing and operating your pump. If you have problems with the pump, refer to the Maintenance and Troubleshooting Sections.

If you need assistance, contact the dealer from whom you received your pump. If you need further assistance, please call the factory.

How to Use this Manual

All information in this manual applies to the 120-volt electric gear pump with an automatic or manual nozzle.



This symbol is used throughout this manual to call your attention to safety messages.

⚠WARNING **WARNINGS** alert you to the potential for personal injury.

⚠CAUTION **CAUTIONS** call attention to practices or procedures which may cause damage to your equipment.

NOTES give you information that can improve efficiency of operations.

It is your responsibility to:

- know and follow applicable national, state, and local safety codes pertaining to installing and operating electrical equipment for use with flammable liquids.
- know and follow all safety precautions when handling petroleum fuels.
- ensure that all equipment operators have access to adequate instructions concerning safe operating and maintenance procedures.

SAFETY INSTRUCTIONS

This is a safe product, designed and manufactured to meet the high safety standards of Underwriters Laboratories (UL) and the Canadian Standards Association (CSA). It is designed to safely handle fuel products and, if installed, operated, and maintained correctly, will give years of dependable service.



WARNING

This product shall not be used for pumping fuel or other liquids into aircraft.

Important Information

To ensure safe operation, all fuel transfer systems must be properly grounded.

Proper grounding means a continuous metal-to-metal contact from one component to the next, including tank, bung, pump, meter, filter, hose and nozzle.

Care should be taken to ensure proper grounding during initial installation and after any service or repair procedures.

All factory-supplied accessories and components assure proper grounding.

Here is a list of major warnings and cautions that are given throughout this manual. Please take a moment to review them now for your future safety.

1. To prevent physical injury, observe precautions against fire or explosion when dispensing fuel. Do not operate the system in the presence of any source of ignition including running or hot engines, lighted cigarettes, or gas or electric heaters.
2. Observe precautions against electrical shock when operating the system. Serious or fatal shock can result from operating electrical equipment in damp or wet locations.
3. Avoid prolonged skin contact with petroleum fuels. Use protective goggles, gloves and aprons in case of splashing or spills. Change saturated clothing and wash skin promptly with soap and water.
4. This product is *RAINPROOF* for outdoor use. Use this pump for gasoline (up to 15% alcohol blends such as E15), diesel fuel (up to 20% biodiesel blends such as B20) and kerosene. **Do not** use this pump for dispensing any fluids other than those for which it was designed. To do so may damage pump components and will void the warranty.
5. Do not leave the system running without fluids. “Dry running” can damage the pump. If the system fails to deliver fuel after 15 to 20 seconds, turn the pump off and refer to the Troubleshooting Section.
6. Do not pump the tank completely dry, as contaminants from the tank bottom may enter the pump.
7. To avoid pump damage, do not run the pump for more than 10 minutes with the nozzle closed.
8. The duty cycle of this pump is 30 minutes ON and 30 minutes OFF. Allow the pump to cool for 30 minutes.
9. Observe precautions against electrical shock when servicing the pump. **Always** disconnect power before repairing or servicing. **Never** apply electrical power to the system when any of the coverplates are removed.
10. If using solvent to clean pump components or tank, observe the solvent manufacturer’s recommendations for safe use and disposal.

Damage Inspection

Upon receipt of your system, inspect all parts and components. Remove protective caps and plugs, as needed, for a thorough inspection.

If any items are damaged or missing, please contact your dealer or distributor.

INSTALLATION

Before installation, wrap all threaded fuel connections with three to four turns of thread tape or a pipe thread sealant approved for use with petroleum fuels.

Important Information

To ensure safe operation, all fuel transfer systems must be properly grounded.

Proper grounding means a continuous metal-to-metal contact from one component to the next, including tank, bung, pump, meter, filter, hose, and nozzle.

Care should be taken to ensure proper grounding during initial installation and after any service or repair procedures.

All factory-supplied accessories and components assure proper grounding.

Priming

This pump is designed to self-prime with dry gears. Expect suction lift as follows:

Manual Nozzle: 5.5 feet (1.7 m) with diesel
6.7 feet (2.1 m) with gasoline

Automatic Nozzle: 4.8 feet (1.5 m) with diesel
5.8 feet (1.8 m) with gasoline

If your installation requires a greater distance from the lowest fuel level to the pump, the pump may not prime until the gears are coated with fluid.

To coat the gears, remove the plug on the top of the pump (as detailed in Figure 6) and pour a small quantity of motor oil into the gear cavity. Replace the plug, turn the pump on, and open the nozzle.

A foot valve with pressure relief will be required to maintain prime.

Install Bung Adapter and Suction Pipe

Before installation, wrap all threaded fuel connections with three to four turns of thread tape or a pipe thread sealant approved for use with petroleum fuels.

1. Tighten the bung adapter snugly on the fuel tank.
2. Place the union ring gasket into the inlet fitting on the bottom of the pump.
3. Thread the suction pipe into the inlet fitting and tighten until snug.

Install Pump on Tank

1. Clean the tank interior of all dirt and foreign material.
2. Extend the suction pipe to its full length and insert into the tank opening. (Figure 1)

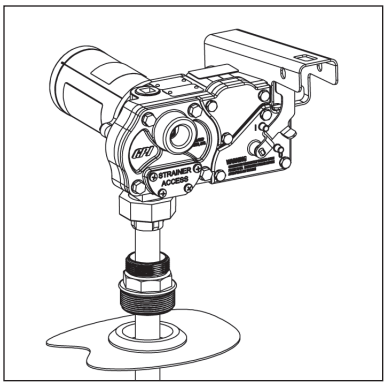

Figure 1

The suction pipe will adjust to the length needed to rest on the tank bottom.

NOTE: The suction pipe supplied has a variable length of 22 to 40 inches (56 to 102 cm). If additional length is needed, use the 15 inch (38 cm) Suction Pipe Extension. See the Illustrated Parts List for information on accessories.

3. Place the pump on the bung adapter and tighten the union ring securely with a pipe wrench. Make sure the union ring is not cross-threaded.

NOTE: To prevent pressure buildup and possible fuel leaks through the nozzle, make sure the tank is vented. A vent cap rated at 3 psi or less is recommended.

Install Electrical Connections

This pump is designed for use with 120-volt power. Do not attempt installation on 12-volt, 24-volt or 230-volt power sources.

⚠ WARNING

To avoid personal injury, these instructions must be followed.

It is important to exercise more than ordinary care with electrical installation and maintenance. Failure to follow these electrical connection instructions could result in death or serious injury from shock, fire or explosion.

Electrical wiring and connections must be made only by a licensed electrician in accordance with national, state, and local electrical codes regarding Class I, Division 1 requirements as well as NFPA Code 70 and 30. Other codes may apply.

Install UL Listed, rigid metal conduit and code-specified gasoline and oil-resistant wire with ground wire from the switch box to the pump electrical box and use proper seal offs.

⚠ WARNING

To avoid personal injury, make sure power is disconnected before removing coverplates.

1. Remove the electrical coverplate. (Figure 2) Be careful not to damage gasket.

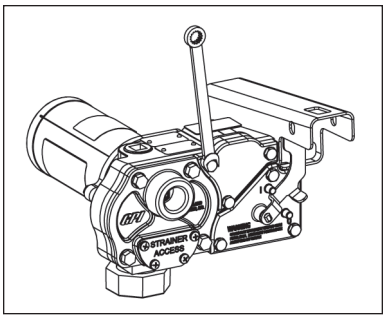

Figure 2

2. Route the wiring and conduit to the pump.
3. Attach the ground wire to the pump's green ground wire.

⚠ WARNING

To avoid personal injury, the pump must be properly grounded.

4. Attach wiring to pump wires.
5. Position all wires inside the pump's electrical cavity.
6. Replace the electrical coverplate.

Install Hose and Nozzle

NOTE: If installing accessories such as flowmeters or filters, do so now, following the manufacturer's instructions.

1. Tighten the hose into the pump outlet.
2. Tighten the nozzle onto the opposite hose end.
3. Place the nozzle into the nozzle holder on the pump housing. Note that the nozzle cannot be placed in the holder unless the pump is off.

NOTE: The nozzle holder allows the pump to be locked when the nozzle is in place.

OPERATION

⚠ WARNING

To prevent physical injury, observe precautions against fire or explosion when dispensing fuel. Do not operate the system in the presence of any source of ignition including running or hot engines, lighted cigarettes, or gas or electric heaters.

⚠ WARNING

Observe precautions against electrical shock when operating the system. Serious or fatal shock can result from operating electrical equipment in damp or wet locations.

⚠ WARNING

Avoid prolonged skin contact with petroleum fuels. Use protective goggles, gloves, and aprons in case of splashing or spills. Change saturated clothing and wash skin promptly with soap and water.

⚠ CAUTION

This pump is designed for use only with gasoline, kerosene, and diesel fuel. Do not use this pump for dispensing any fluids other than those for which it was designed. To do so may damage pump components and will void the warranty.

⚠ CAUTION

Do not leave the system running without fluids. "Dry running" can damage the pump. If the pump fails to deliver fuel after 15 to 20 seconds, turn OFF and refer to the Troubleshooting Section.

Before Each Use

Check for leaks around seals or connections. If found, refer to the Troubleshooting Section. Make sure hoses are in good condition and connections are tight. Make sure the work area is dry.

⚠ WARNING

Inspect external pump wiring regularly to ensure it is correctly installed and shows no signs of wear.

Make sure the tank contains enough fuel.

⚠ CAUTION

Do not pump the tank completely dry, as contaminants from the tank bottom may enter the pump.

Check for obvious signs of fuel contamination such as a loose or missing tank lid which could allow debris into the tank.

Dispense Fuel

1. To turn the pump on, remove the nozzle from its holder and push the switch lever up.

NOTE: The nozzle holder and switch are designed so the pump cannot operate with the nozzle in the holder.

2. Insert the nozzle into the receiving tank or container. Squeeze the handle to start fuel flow.

This pump is designed to self-prime. If it does not begin to deliver fuel within 15 to 20 seconds after turning the pump on and opening the nozzle, turn off and refer to the Priming and Troubleshooting Sections.

An automatic bypass valve prevents pressure buildup when the pump is on with the nozzle closed.

⚠ CAUTION

To avoid pump damage, do not run the pump for more than 10 minutes with the nozzle closed.

Do not overfill the tank. Repeated attempts to "top off" the tank with an automatic nozzle may result in overfilling.

3. After dispensing fuel, release the nozzle handle, turn the pump off, and return the nozzle to its holder.

⚠ CAUTION

The duty cycle of this pump is 30 minutes ON and 30 minutes OFF. Allow to cool for 30 minutes.

Auxiliary Temperature-Limiting Device

The motor is provided with an internal auxiliary temperature-limiting device. Excessive motor heat can trip the device. It resets automatically after the motor has cooled approximately 30 minutes.

MAINTENANCE

This pump is designed for minimum maintenance. Motor bearings are sealed and require no lubrication. Inspect the pump and components regularly for fuel leaks and make sure the hose and power cord are in good condition. Keep the pump exterior clean to help identify leaks.

Perform a regular visual inspection of the system using the Before Each Use procedure in the Operation Section.

Do not use this pump to pump water, chemicals, or herbicides. Dispensing any fluid other than gasoline, diesel fuel or kerosene will damage the pump. Use of the pump with unauthorized fluids will void the warranty.

Remove and clean the fuel strainer after every 40 hours of operation or if low flow is noticed. Refer to the Repair Section for Strainer Cleaning instructions.

The pump may not deliver fluid if an air lock occurs due to an external filter, meter, or an off-the-shelf automatic nozzle. To correct, remove the pipe plug in the top outlet port and fill the gear cavity and meter with fuel. Use of a factory-supplied automatic nozzle is recommended.

REPAIR

When disassembling, carefully inspect all parts for wear or damage. Replace components, as necessary. The Illustrated Parts List gives information on replacement parts and kits.

Important Information

To ensure safe operation, all fuel transfer systems must be properly grounded.

Proper grounding means a continuous metal-to-metal contact from one component to the next, including tank, bung, pump, meter, filter, hose and nozzle.

Care should be taken to ensure proper grounding during initial installation and after any service or repair procedures.

All factory-supplied accessories and components assure proper grounding.

⚠ WARNING

Observe precautions against electrical shock when servicing the pump. Always disconnect power before repairing or servicing. Never apply electrical power to the system when any of the coverplates are removed.

⚠ WARNING

Avoid prolonged skin contact with petroleum fuels. Use protective goggles, gloves, and aprons in case of splashing or spills. Change saturated clothing and wash skin promptly with soap and water.

Remove Pump from Tank

1. Turn the pump off and disconnect from power.
2. Turn the union ring counterclockwise to release the inlet fitting.
3. Lift the pump and suction pipe from the bung adapter.
4. Elevate the nozzle and hose to allow excess fuel to drain into the tank.
5. Wipe the entire system with a clean cloth.

Service O-Rings

A Wet Seal Kit contains all seals for your pump and should be on hand when performing repairs. Old seals may then be replaced with new ones as seals are accessible.

In general, when inspecting O-rings, look for breaks, wear, and signs of deterioration, such as swelling. Replace, as necessary. Before seating, coat O-rings with light grease.

Clean or Replace Strainer

Clean the inlet strainer after every 40 hours of operation or if low flow occurs.

1. Turn the pump off and disconnect from power.
2. Remove the strainer coverplate.
3. Remove the inlet strainer and inspect for damage or clogs. (Figure 3)

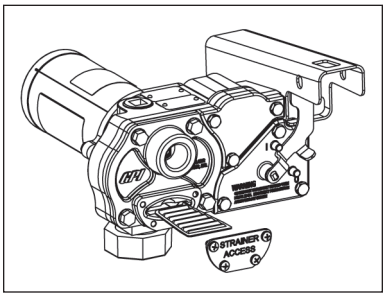

Figure 3

4. Clean the strainer with a soft-bristled brush and solvent. If the strainer is very dirty, compressed air may be used. If damaged, replace the strainer.

NOTE: A very dirty strainer can indicate a contaminated fuel tank. Clean the tank, as necessary.

⚠ WARNING

If using solvent to clean pump components or tank, observe the solvent manufacturer's recommendations for safe use and disposal.

5. Clean the coverplate and O-ring. Coat the O-ring lightly with grease.
6. Place the strainer in the cavity.
7. Ensure the coverplate O-ring is properly seated and tighten the strainer coverplate.

Replace Gears and Drive Key

1. Turn the pump off and disconnect from power.
2. Remove the gear coverplate. (Figure 4)

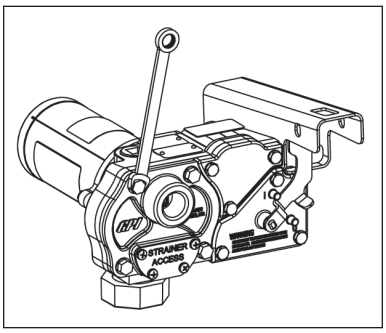

Figure 4

3. Lift the drive key and gears from the pump. (Figure 5)

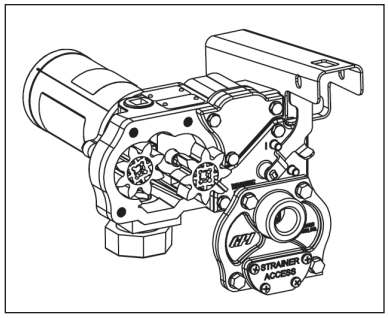

Figure 5

4. Inspect the gears and key for wear and damage. Replace, as necessary.
5. Wipe the gear cavity with a clean cloth.
6. Replace the gears. Make sure they turn freely.
7. Replace the drive key.
8. Make sure the gear coverplate O-ring is securely in place. Tighten the coverplate to the housing.

Clean or Replace Bypass Poppet

1. Turn the pump off and disconnect from power.
2. Using a drive ratchet or extension, remove the pipe plug from the top outlet port. (Figure 6)

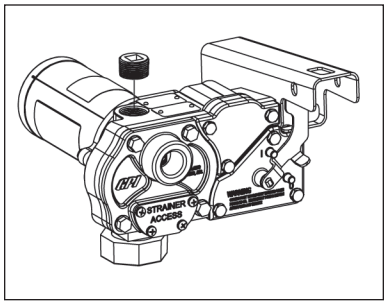

Figure 6

3. Remove the gear coverplate and O-ring from the pump housing.
4. Lift the drive key and two gears from the pump.
5. To clean the bypass poppet:
   a. With a clean cloth, wipe the poppet cavity through the top outlet port.
   b. Push down on the poppet until the poppet O-ring is exposed inside the housing. (Figure 7)

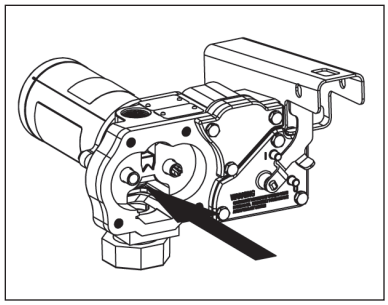

Figure 7

   c. Using a clean cloth, rotate the poppet and clean it thoroughly.

6. To remove or replace the bypass poppet:
   a. As above, push down on the poppet until the O-ring is exposed.
   b. Remove the O-ring with a small screwdriver or similar tool. Take care not to damage the poppet or O-ring. (Figure 8)

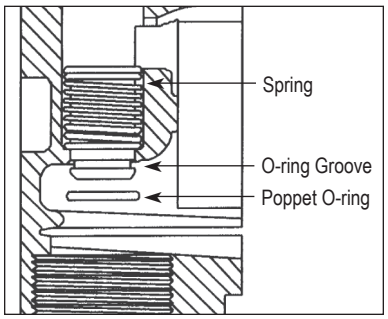

Figure 8

   c. From inside the housing, use a small screwdriver to push the poppet and spring through the top outlet port. (Figure 9)

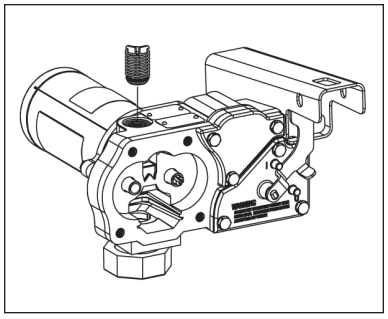

Figure 9

   d. Wipe the poppet and gear cavities with a clean cloth.
   e. Replace the poppet, O-ring and spring, as necessary.

NOTE: Replace O-ring if damaged, swollen or loose-fitting.

7. To assemble, place the spring and poppet into the poppet cavity through the top outlet port. Compress the poppet into the housing. Coat the O-ring lightly with grease and slip over the poppet head. Make sure the O-ring is well seated.
8. Push on the poppet through the top outlet port to make sure it moves freely.
9. Install the pipe plug again, using sealant as necessary.
10. Replace the gears and drive key. Make sure gears turn freely with the key removed.
11. Make sure the gear coverplate O-ring is in place. Tighten the coverplate to the pump housing.

Service Motor Wiring

1. Turn the pump off and disconnect from power.
2. Remove the electrical coverplate from the pump housing. (Figure 10) Evaluate condition of gasket. Replace as needed.

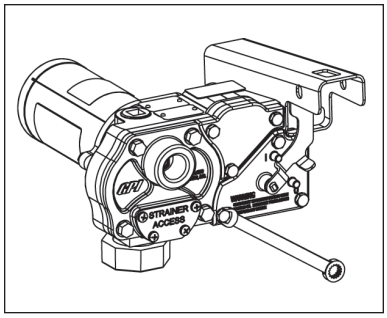

Figure 10

3. Inspect the wiring connections and cavity. (Figure 11)

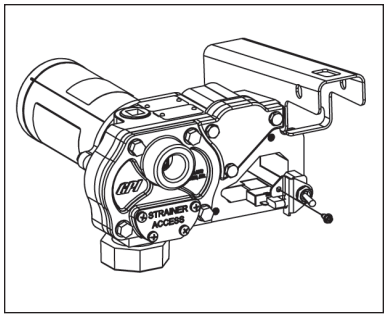

Figure 11

NOTE: If permanent wiring is damaged or corroded, the pump must be returned to the factory for wire replacement.

4. Assemble again. Make sure the O-ring is in place and the coverplate is tightened securely.

Replace Switch

1. Turn pump off and disconnect from power.
2. Remove the switch coverplate from the pump housing. (Figure 12)

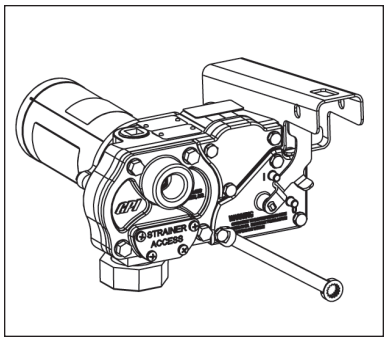

Figure 12

3. Remove the torx head screw on the switch assembly, then remove the switch.
4. Remove wire terminals from switch.
5. Loosen the hex nut on the switch mounting plate and remove the defective switch.
6. Reinstall the new switch by reversing the above procedure. There are no polarity requirements. Guide the switch into the housing cavity, pushing black wires in before the switch. Use the housing slot to hold the switch into place.
7. Wires must clear the coverplate and must not be pinched. Make sure the O-Ring is properly seated before tightening the switch coverplate.

Replace Switch Lever or Switch Lever Shaft O-Ring

1. Turn off the pump and disconnect from power.
2. Remove the switch coverplate from the pump housing.
3. Remove the screw connecting the switch cam to the coverplate.
4. Remove the cam and switch lever.
5. Replace the switch lever or switch lever shaft O-Ring as needed.

NOTE: **In order to preserve the UL Listing or CSA Certification for pump safety, return the entire pump to the factory for motor repair or replacement.** For products serviced outside the factory, the UL and CSA nameplates must be defaced to indicate the equipment may no longer meet the requirements for UL Listing or CSA Certification. This does not apply to products serviced outside the factory under the UL program for Rebuilt Motors for Use in Hazardous Locations and the CSA rebuild program.

Replace Motor Shaft Seal

1. Turn the pump off and disconnect from power.
2. Remove the gear coverplate, gears, and drive key as described in Gear Replacement instructions above.
3. Remove the motor from the pump housing.
4. Remove the motor shaft seal by prying out with a small screwdriver. (Figure 13)

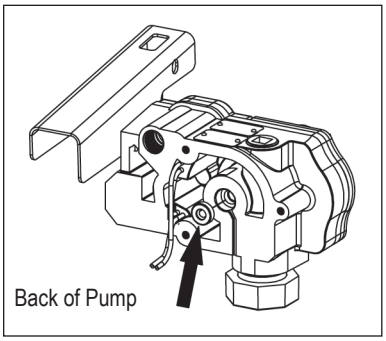

Figure 13

5. Lubricate the gear shaft with WD-40® or a similar penetrating oil.
6. Press a new motor shaft seal evenly in the pump housing until seated. Lubricate the seal with a lightweight motor oil.
7. Gently slide the shaft through the seal until the motor is flush against the pump housing.
8. Tighten the motor to the pump housing. Check for proper installation by working a .003 feeler gauge around the motor flange. The gauge shall not fit between the flange and the housing.
9. Install the gears and drive key as described in Gear Replacement instructions above.

TROUBLESHOOTING

SYMPTOM	PROBABLE CAUSE	CORRECTIVE ACTION
A. MOTOR DOES NOT RUN	1. Auxiliary temperature-limiting device tripped	Turn pump switch off. Allow motor to cool approximately 30 minutes. Device resets automatically. Try again.
	2. Switch defective	Remove switch coverplate and inspect switch. Replace, if necessary.
	3. Motor burned out	Replace motor as described in the Repair Section.
B. MOTOR RUNS BUT DOES NOT PUMP FLUID	1. Drive key broken	Remove gear coverplate and replace drive key. Make sure gears turn freely with the key removed.
	2. Suction pipe clogged, damaged, or missing	Remove pump from tank. Inspect suction pipe. Clean or replace, as necessary.
	3. Gear coverplate or O-ring damaged	Remove and inspect the coverplate and O-ring. Replace, as necessary. Refer to the Repair Section on Servicing O-rings.
	4. Strainer clogged or defective	Remove strainer coverplate. Remove and clean strainer. Install again.
	5. Bypass poppet O-ring worn or missing	Inspect the O-ring, using instructions in the Repair Section. Replace, if necessary.
	6. Bypass poppet O-ring dirty	Remove poppet assembly and clean poppet and cavity.
	7. System air leak	Tighten all pump fittings and connections. Inspect suction pipe for leaks or damage.
	8. System air lock	This can occur if external filter, meters, or an off-the-shelf automatic nozzle is being used. To correct, remove the pipe plug in the top outlet port and fill the gear cavity with fuel. Use of a factory-supplied automatic nozzle is recommended.
	9. Poor connections or low voltage	Make sure electrical connections are secure. Check power source.
	10. Fuel level low	Fill tank.
	11. Bypass poppet binding or damaged	Remove the bypass poppet, spring, and O-ring. Clean cavity. Inspect and replace components, as necessary.
C. LOW FLOWRATE	1. Poor connections or low voltage	Make sure electrical connections are secure. Also check power source.
	2. Strainer partially clogged	Remove the strainer coverplate. Remove and clean the strainer. Install again.
	3. Suction pipe clogged or damaged	Remove pump from tank. Inspect suction pipe. Clean or replace, as necessary.
	4. Fuel tank empty	Fill tank.
	5. Using off-the-shelf automatic nozzle	Factory-supplied automatic nozzle is recommended.
	6. System air leak	Tighten all pump fittings and connections. Inspect suction pipe for leaks or damage. Replace, as necessary.
	7. Suction pipe too close to tank bottom	Suction pipe must have at least 1/4 in. (0.6 cm) clearance from bottom of the tank.
	8. Bypass poppet spring weak	Remove the bypass poppet and inspect spring. Replace, if necessary.
	9. Discharge hose too long	Long hoses reduce flow rate. Shorten hose.
D. MOTOR STALLS WHEN OPERATING IN BYPASS MODE	1. Running too long in bypass mode	Limit bypass operation to 10 minutes.
	2. Gears worn	Remove gear coverplate and inspect gears and drive key. Make sure gears turn freely with the key removed. Replace, if worn.
	3. Wiring defective	Use Wiring instructions in the Installation Section to ensure proper connections.
	4. Bypass poppet binding or damaged	Remove the bypass poppet, spring, and O-ring. Clean cavity. Inspect components and replace, as necessary.
	5. Motor defective	Replace motor as described in the Repair Section.
E. RAPID OVERHEAT-OF MOTOR	1. Duty cycle too long	Pump operation should not exceed the standard duty cycle of 30 minutes ON, and 30 minutes OFF. Allow the pump to cool for 30 minutes.
	2. Strainer clogged	Remove strainer coverplate. Remove and clean strainer. Install again.
	3. Suction pipe clogged or damaged	Remove pump from tank. Inspect suction pipe. Clean or replace, as necessary.
	4. Gears worn	Remove gear coverplate and inspect gears and drive key. Make sure gears turn freely with key removed. Replace, if necessary.
	5. Fuel level low	Fill tank.
	6. Running too long in bypass mode	Limit bypass operation to 10 minutes.

ILLUSTRATED PARTS LIST

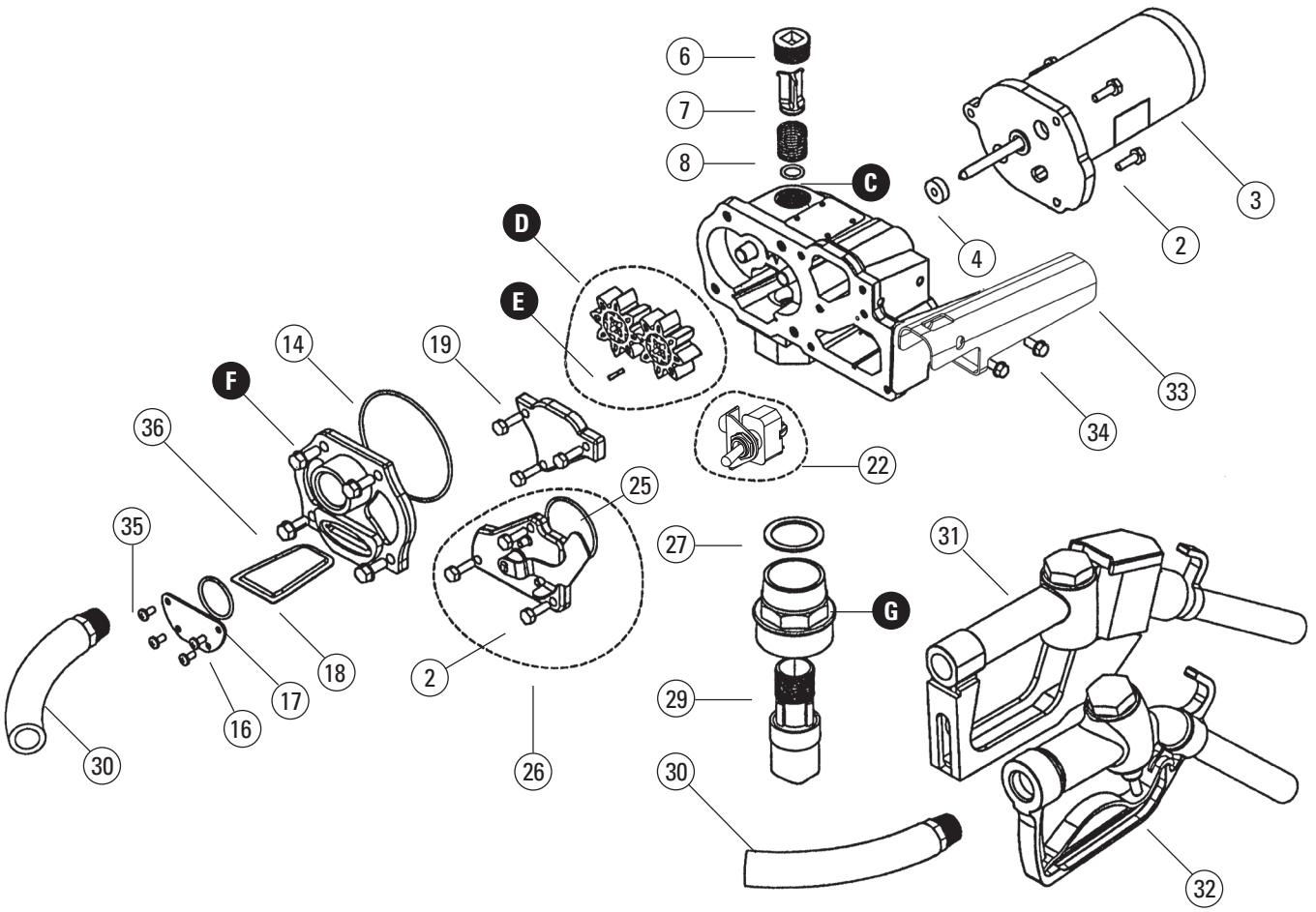

Item No.	Part No.	Description	No. Req'd.
2	904002-23	Sems Screw, 1/4-20 x 3/4 in.	9
3	119008-551	Motor, 120-volt AC with Circuit Board	1
4	11002502	Motor Shaft Seal or (Kit A or B)	1
6	904001-42	Pipe Plug, 3/4 inch	1
7	110010-1	Bypass Poppet	1
8	110131-2	Bypass Poppet Spring	1
14	110026-1	Gear Coverplate O-ring or (Kit A or B)	1
16	110024-1	Coverplate, Strainer	1
17	110026-4	Strainer Coverplate O-ring or (Kit A or B)	1
18	110009-1	Inlet Strainer	1
19	110195-02	Electrical Coverplate	1
	110285-01	Electrical Cover Gasket*	1
22	110277-506	Assembly, Switch	1
25	110026-6	Switch Coverplate O-ring or (Kit A)	1
26	110276-501	Switch Coverplate Assembly	1
27	110032-1	Union Ring Gasket	1
29	110100-1	Suction Pipe, 22 to 40 in. (56 to 102 cm)	1
30	110187-1	Hose Assembly, 3/4 in. x 12 ft., (3.7 m) Non-UL	1
31	110291-01	Automatic Unleaded Nozzle, 3/4 in.	1
32	110155-21	Manual Unleaded Nozzle, 3/4 in., UL	1
33	11030302	Cover, Nozzle	1
34	904006-86	Screw, Tapping	2
35	904002-22	Sems Screw	4
36	904002-24	Sems Screw	4

Accessories and Kits

	111501-1	Adapter Kit
	906001-4	Pressure Vent Cap (3 psi)
	115527-2	Suction Pipe Extension, 15 in. (38 cm)
	110016-1	Inlet Fitting (not shown)
	110158-1	Union Ring (not shown)
A	110504-1	Overhaul Kit - Wet Seal Kit plus: 2 Gears; Drive Key; O-Ring for Switch Coverplate
B	110906-1	Wet Seal Kit - Motor Shaft Seal and O-Rings for: Strainer Coverplate; Gear Coverplate; Bypass Poppet
C	110908-1	Bypass Poppet O-ring Kit or (Kit A or B)
D	110907-1	Gear Kit or (Kit A)
E	110913-2	Drive Key Kit
F	110927-04	Gear Coverplate Kit
G	110909-1	Bung Adapter Kit

* Evaluate condition of gasket to determine if replacement is required.

SPECIFICATIONS

Applications:

Fluids: Low viscosity petroleum fuels such as gasoline (up to 15% alcohol blends such as E15), diesel fuel (up to 20% biodiesel blends such as B20) and kerosene.

Operating Environment: Designed for mounting on above-ground vented petroleum storage tanks.

RAINPROOF for outdoor use.

Pump Housing:

Lightweight, corrosion-resistant, cast aluminum body. Convenient spin collar for easy installation.

Performance:

Pump Rate:
- Manual Nozzle: Up to 12 GPM (45 LPM)
- Automatic Nozzle: Up to 9 GPM (30 LPM)

Duty Cycle: 30 min. ON, 30 min. OFF

Suction Lift:
- Manual Nozzle: Up to 5.5 ft. (1.7 m)
- Automatic Nozzle: Up to 4.8 ft. (1.5 m)

Operating Temperature:

-20° F to +125° F (-29° C to +52° C)

Operating Pressure:

15 PSI

Electrical Specifications:

Input: 120-volt AC
Motor: 1400 RPM, UL Listed, CSA Certified

Mechanical Connections:

Bung: 2 in. NPT
Inlet: 1 in. NPT
Outlet: 3/4 in. NPT

Accessories:

Standard 3/4 inch x 12 ft. (3.7 m) Buna-N electrically conductive discharge hose

Standard 3/4 inch manual unleaded nozzle

Standard 3/4 inch automatic shutoff unleaded nozzle

Weight:

Shipping: 22 lbs. (9.9 kg) with manual nozzle
23 lbs. (10.4 kg) with automatic nozzle

PARTS AND SERVICE

For warranty consideration, parts, or other service information, please contact your local distributor. If you need further assistance, contact the GPI Customer Service Department in Wichita, Kansas, during normal business hours at:

Tel: 316-686-7361
Fax: 316-686-6746

To obtain prompt, efficient service, always be prepared with the following information:

1. The model number of your pump.
2. The serial number or manufacturing date code of your pump.
3. Part descriptions and numbers.

Part information can be obtained from the Illustrated Parts List.

For warranty work, always be prepared with your original sales slip or other evidence of purchase date.

Please contact GPI before returning any parts. It may be possible to diagnose the trouble and identify needed parts in a telephone call. GPI can also inform you of any special requirements you will need to follow for shipping fuel dispensing equipment.

⚠CAUTION

Do not return the pump or parts without authority from the Customer Service Department. Due to strict government regulations, GPI cannot accept parts unless they have been drained and cleaned.

SAVE THESE INSTRUCTIONS

Limited Warranty Policy

Great Plains Industries, Inc. 5252 E. 36th Street North, Wichita, KS USA 67220-3205, hereby provides a limited warranty against defects in material and workmanship on all products manufactured by Great Plains Industries, Inc. This product includes a 2 year warranty from date of purchase as evidenced by the original sales receipt. A 30 month warranty from product date of manufacture will apply in cases where the original sales receipt is not available. Reference product labeling for the warranty expiration date based on 30 months from date of manufacture. Manufacturer's sole obligation under the foregoing warranties will be limited to either, at Manufacturer's option, replacing or repairing defective Goods (subject to limitations hereinafter provided) or refunding the purchase price for such Goods theretofore paid by the Buyer, and Buyer's exclusive remedy for breach of any such warranties will be enforcement of such obligations of Manufacturer. The warranty shall extend to the purchaser of this product and to any person to whom such product is transferred during the warranty period.

This warranty shall not apply if:

A. the product has been altered or modified outside the warrantor's duly appointed representative;

B. the product has been subjected to neglect, misuse, abuse or damage or has been installed or operated other than in accordance with the manufacturer's operating instructions.

To make a claim against this warranty, contact the GPI® Customer Service Department at 316-686-7361 or 800-835-0113. Or by mail at:

Great Plains Industries, Inc.
5252 E. 36th St. North
Wichita, KS, USA 67220-3205

GPI will step you through a product troubleshooting process to determine appropriate corrective actions.

GREAT PLAINS INDUSTRIES, INC., EXCLUDES LIABILITY UNDER THIS WARRANTY FOR DIRECT, INDIRECT, INCIDENTAL AND CONSEQUENTIAL DAMAGES INCURRED IN THE USE OR LOSS OF USE OF THE PRODUCT WARRANTED HEREUNDER.

The company herewith expressly disclaims any warranty of merchantability or fitness for any particular purpose other than for which it was designed.

This warranty gives you specific rights and you may also have other rights which vary from U.S. state to U.S. state.

Note: In compliance with MAGNUSON MOSS CONSUMER WARRANTY ACT – Part 702 (governs the resale availability of the warranty terms).

LISTED MOTOR

PEI MEMBER

Wichita / Sydney / Mexico City

GREAT PLAINS INDUSTRIES GPI®

Great Plains Industries, Inc. / 800-835-0113 / GPI.net

© 2016 Great Plains Industries, Inc. All Rights Reserved. Made in U.S.A.
GPI and GPI® are registered trademarks of Great Plains Industries, Inc.