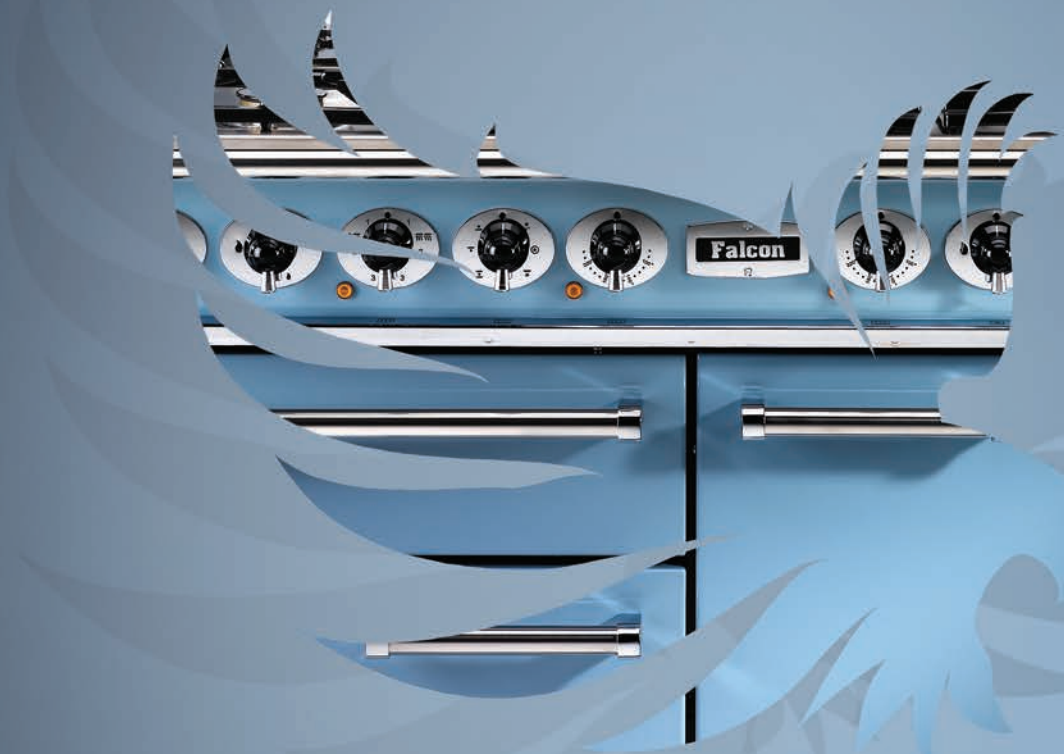

USER GUIDE & INSTALLATION INSTRUCTIONS

Classic 90 Gas
Australia

U110808-01A

SLOW BAKED LEG OF LAMB

INGREDIENTS

- 2-3 large sprigs of rosemary
- 4 large garlic cloves cut in half lengthways
- 1.8 kg leg of lamb
- 8 good quality anchovy fillets, halved
- 100 ml olive oil
- 250 ml dry red wine
- Maldon salt and freshly ground black pepper

METHOD

1. Preheat the oven to 220 °C (for a conventional oven), 200 °C (for a fan oven) or gas mark 7.
2. Pull the small sprigs off the rosemary branches and set aside with the garlic.
3. Using the tip of a paring knife, make up to 20 well-spaced cuts into the flesh of the lamb, about 2.5 cm inch deep. Divide the rosemary sprigs, garlic and anchovies and push down into the cuts. Place the leg on a large roasting tin and pour over the oil, massaging it all over the joint. Season well with salt and pepper and pour the wine and 250 ml water into the tin.
4. Put into the oven and sear for 15 minutes, then turn the temperature right down to 130 °C (conventional oven), 110 °C (fan oven) or gas mark 1 and roast for 4-5 hours, basting every 30 minutes or so. Basting frequently helps to keep the meat moist and encourages the build up of a good glaze on the outside. Add more liquid (wine or water) if the tin looks dry Ð there should always be liquid in the tin throughout this cooking process.
5. The meat is ready when it starts to fall off the bone, at which point it should have a core temperature of 90 °C. Remove from the oven, transfer to a warmed carving dish, cover loosely with foil and leave to rest in a warm place for 30-45 minutes before carving.
6. Pour the juices from the tin into a tall hi-ball glass and allow to settle. Spoon the fat from the top of the glass. There should be enough sticky, reduced juices for an intense gravy hit if not, pour the juices you have back into the roasting tin and put it over the heat, pour in a splash of water or wine and deglaze the tin scraping up all the sticky bits from the base. Boil fast until syrupy, taste and correct the seasoning.

RASPBERRY SOUFFLÉ

INGREDIENTS

- 400 g raspberries
- 1 tbsp lemon juice
- 100 g caster sugar
- 2 tsp créme de framboise
- 1 tsp cornflour
- 180 g egg whites (about 6)
- Pinch of cream of tartar or a squeeze of lemon juice
- Icing sugar for dusting

METHOD

1. For the soufflé, press the raspberries through a fine sieve to produce 180 g of purée. Put this into a heavy-bottomed pan, add the lemon juice and reduce down to a thick jam, stirring from time to time and being careful not to let it catch and burn.
2. Put 45 g of the sugar in a separate pan. Melt it and then boil until it becomes a thick syrup (121°C on a sugar thermometer). To test without a thermometer, dip a teaspoon into the syrup and then dip quickly into cold water. You should be able to roll the cooling syrup into a ball between your fingers. Be careful as the syrup is extremely hot. When it has reached the right point, stir the hot syrup into the raspberry jam.
3. Mix the framboise and cornflour together and stir into the jam over the heat. Turn the jam into a small bowl, sprinkle the surface with icing sugar and cover with cling film.
4. Preheat the oven (not grill) to 180 °C shelf level 2 (conventional oven), 160 °C (fan oven) or gas mark 4 centre shelf.
5. Whisk the egg whites with the cream of tartar until you can form soft peaks, then fold in the remaining caster sugar. Lightly fold the whites into the jam, leaving thin traces of white visible in the mixture.
6. Spoon into four large buttered and sugared ramekins, place these on a baking tray and bake for 10 minutes.
7. Dust with icing sugar.

Contents

1. Before You Start... 1

Personal Safety 1
Gas Connection Safety 1
If You Smell Gas 1
Peculiar Smells 2
Ventilation 2
Maintenance 2
Oven Care 3
Grill/Glide-out Grill™ Care 4
Cooling Fan 4
Cooker Care 4
Cleaning 4

2. Cooker Overview 5

Hotplate Burners 5
Wok Burner 6
The Wok Cradle (optional extra) 7
The Griddle 7
The Glide-out Grill 8
The Ovens 9
Operating the Ovens 10
Accessories 11
Main Oven Light 11

3. 3 Button clock 12

4. Cooking tips 14

5. Cooking Table 15

6. Cleaning Your Cooker 16

7. Troubleshooting 20

8. Installation 22

Service and Spares 22
Safety Requirements and Regulations 23
Provision of Ventilation 23
Location of Cooker 23
Conversion 23
Positioning the Cooker 25
Moving the Cooker 26
Lowering the Two Rear Rollers 26
Completing the Move 26
Fitting the Stability Bracket and Chain 27
Fitting the Oven Burner Trim 28
Gas Connection 28
Natural Gas 28
Propane 28
Pressure Testing 28
Electrical Connection 29
Earth Continuity Check 29
Polarity Check 29
Final Checks 31
Final Fitting 31
Customer Care 31

9. Conversion to LP Gas 32

Hotplate 32
Control Panel Removal 32
Bypass Screw Adjustment 32
Grill 33
Ovens 33
Pressure Testing 33
Affix Label 33

10. Servicing 34

Panels 34
Hotplate 35
Controls 36
Grill 37
Ovens 38
Doors 40

11. Circuit Diagram 42

12. Technical Data 43

1. Before You Start...

Your cooker should give you many years of trouble-free cooking if installed and operated correctly. It is important that you read this section before you start.

Personal Safety

This appliance is for cooking purposes only. It must not be used for other purposes, for example heating a room. Using it for any other purpose could invalidate any warranty or liability claim. Besides invalidating claims this wastes fuel and may overheat the control knobs.

This cooker must be installed in accordance with the relevant instructions in this booklet and with the national and local regulations as well as the local gas and electricity supply companies' requirements.

- This appliance can be used by children aged from 8 years and above and persons with reduced physical, sensory or mental capabilities or lack of experience and knowledge if they have been given supervision or instruction concerning use of the appliance in a safe way and understand the hazards involved.
- Children **less** than 8 years of age should be kept away unless continuously supervised. Children shall not play with the appliance. Cleaning and user maintenance shall not be made by children without supervision.
- This appliance is designed for domestic cooking only. Use for any other purpose could invalidate any warranty or liability claim.
- The appliance and its accessible parts become hot during use and will retain heat even after you have stopped cooking. Care should be taken to avoid touching heating elements.
- A long term cooking process has to be supervised from time to time. A short term cooking process has to be supervised continuously.
- At the risk of fire **DO NOT** store items on the cooking surfaces.
- **DO NOT** place articles on or against this appliance.
- **DO NOT** install an aftermarket lid or cover over this appliance.
- **DO NOT** install combustible bench top lids or covers within 200 mm of the nearest burner.
- To avoid overheating, **DO NOT** install the cooker behind a decorative door.
- Accessible parts will become hot during use and will retain heat even after you have stopped cooking. Keep babies and children away from the cooker and never wear loose-fitting or hanging clothes when using the appliance.
- **DO NOT** use a steam cleaner on your cooker.
- Always keep combustible materials, e.g. curtains, and flammable liquids a safe distance away from the cooker.
- **DO NOT** spray aerosols in the vicinity of the cooker while it is on.

Gas Connection Safety

- This cooker is a Class 2 Subclass 1 appliance.
- This appliance can be converted for use on another gas.
- Before installation, make sure that the cooker is suitable for your gas type and supply voltage. See the data badge.
- DO NOT use reconditioned or unauthorised gas controls.
- Disconnect from the electricity and gas supply before servicing.
- When servicing or replacing gas-carrying components disconnect from the gas supply before starting operation. Check the appliance is gas sound after completion.
- Make sure that the gas supply is turned on and that the cooker is wired in and switched on.
- In your own interest and that of safety, it is law that all gas appliances be installed by a qualified person(s).
- An appliance for use on LPG must not be installed in a room or internal space below ground level, e.g. in a basement.

If You Smell Gas

- **DO NOT** turn electric switches on or off
- **DO NOT** smoke
- **DO NOT** use naked flames
- Turn off the gas at the meter or cylinder
- Open doors and windows to get rid of the gas
- Keep people away from the area affected
- Call your gas supplier

Peculiar Smells

When you first use your cooker it may give off an odour. This should stop after use.

Before using for the first time, make sure that all packing materials have been removed and then, to dispel manufacturing odours, turn the ovens to 200 °C and run for at least an hour.

Before using the grill for the first time you should also turn on the grill and run for 30 minutes with the grill pan in position, pushed fully back and the grill door open.

Make sure the room is well ventilated to the outside air (see 'Ventilation' below). People with respiratory or allergy problems should vacate the area for this brief period.

Ventilation

The use of a cooking appliance results in the production of heat and moisture in the room in which it is installed. Therefore, make sure that the kitchen is well ventilated: keep natural ventilation holes open or install a powered cookerhood that vents outside. If you have several hotplates/ burners on, or use the cooker for a long time, open a window or turn on an extractor fan

Maintenance

- Only a qualified service engineer should service the appliance and only approved spare parts should be used. It is recommended that this appliance is serviced annually.
- **DO NOT** use cooking vessels on the hotplate that overlap the edges.
- Unless specified otherwise in this guide, always allow the appliance to cool and then switch it off at the mains before cleaning or carrying out any maintenance work.
- **DO NOT** use the control knobs to manoeuvre the cooker.
- **NEVER** operate the cooker with wet hands.
- **DO NOT** use a towel or other bulky cloth in place of a glove – it might catch fire if brought into contact with a hot surface.
- **DO NOT** use hotplate protectors, foil or hotplate covers of any description. These may affect the safe use of your hotplate burners and are potentially hazardous to health.
- **NEVER** heat unopened food containers. Pressure build up may make the containers burst and cause injury.
- **DO NOT** use unstable saucepans. Always make sure that you position the handles away from the edge of the hotplate.
- **NEVER** leave the hotplate unattended at high heat settings. Pans boiling over can cause smoking, and greasy spills may catch on fire. Use a deep fat thermometer whenever possible to prevent fat overheating beyond the smoking point.
- Unattended cooking on a hob with fat or oil can be dangerous and may result in fire.
- **NEVER** leave a chip pan unattended. Always heat fat slowly, and watch as it heats. Deep fry pans should be only one third full of fat.
- **NEVER** try to move a pan of hot fat, especially a deep fat fryer. Wait until the fat is cool. Filling the pan too full of fat can cause spill over when food is added. If you use a combination of oils or fats in frying, stir them together before heating, or as the fats melt.
- Foods for frying should be as dry as possible. Frost on frozen foods or moisture on fresh foods can cause hot fat to bubble up and over the sides of the pan. Carefully watch for spills or overheating of foods when frying at high or medium high temperatures.
- **DO NOT** use the top of the flue (the slot along the back of the cooker) for warming plates, dishes, drying tea towels or softening butter.
- **DO NOT** use water on grease fires and never pick up a flaming pan. Turn the controls off and then smother

a flaming pan on a surface unit by covering the pan completely with a well fitting lid or baking tray. If available, use a multi-purpose dry chemical or foam-type fire extinguisher.

- **DO NOT** modify this appliance. This appliance is not intended to be operated by means of external timer or separated remote-control system.
- If flammable materials are stored in the drawer, oven(s) or grill(s) it may explode and result in fire or property damage.

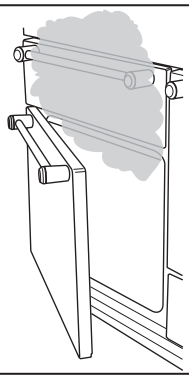

Fig. 1.1

Oven Care

- When the oven is not in use and before attempting to clean the cooker always be certain that the control knobs are in the **OFF** position.
- Use oven gloves to protect your hand from potential burns.
- Cooking high moisture content foods can create a 'steam burst' when the oven door is opened (**Fig. 1.1**). When opening the oven, stand well back and allow any steam to disperse.
- The inside door face is constructed with toughened safety glass. Take care **NOT** to scratch the surface when cleaning the glass panel.
- Accidental damage may cause the door glass panel to fracture.
- Keep oven vent ducts unobstructed.
- **DO NOT** use harsh abrasive cleaners or sharp metal scrapers to clean the oven door glass since they can scratch the surface, which may result in shattering of the glass.
- Make sure the shelves are pushed firmly to the back of the oven. **DO NOT** close the door against the oven shelves.
- **DO NOT** use aluminium foil to cover shelves, linings or the oven roof.
- When the oven is on, **DO NOT** leave the oven door open for longer than necessary, otherwise the control knobs may become very hot.
- **DO NOT** use the timed oven if the adjoining oven is already warm.
- **DO NOT** place warm food in the oven to be timed.
- **DO NOT** use a timed oven that is already warm.
- Use dry oven gloves when applicable – using damp gloves might result in steam burns when you touch a hot surface.

Grill/Glide-out Grill™ Care

- When using the grill, make sure that the grill pan is in position and pushed fully in, otherwise the control knobs may become very hot.
- **DO NOT** leave the grill on for more than a few moments without the grill pan underneath it, otherwise the knobs may become hot.
- **NEVER** close the grill door when the grill is on.
- Accessible parts may be hot when the grill is in use. Young children should be kept away.

Cooling Fan

This appliance may have a cooling fan. When the grill or oven is in operation the fan will run to cool the fascia and control knobs.

Cooker Care

As steam can condense to water droplets on the cool outer trim of the oven, it may be necessary during cooking to wipe away any moisture with a soft cloth. This will also help to prevent soiling and discolouration of the oven exterior by cooking vapours.

Cleaning

- Isolate the electricity supply before carrying out any thorough cleaning. Allow the cooker to cool.
- In the interests of hygiene and safety, the cooker should be kept clean at all times as a build up in fats and other food stuff could result in a fire.
- Clean only the parts listed in this guide.
- Clean with caution. If a wet sponge or cloth is used to wipe spills on a hot surface, be careful to avoid steam burns. Some cleaners can produce noxious fumes if applied to a hot surface.
- **NEVER** use paint solvents, washing soda, caustic cleaners, biological powders, bleach, chlorine based bleach cleaners, coarse abrasives or salt.
- **DO NOT** mix different cleaning products – they may react together with hazardous results.
- All parts of the cooker can be cleaned with hot soapy water.
- Take care that no water seeps into the appliance.
- Before you remove any of the grill parts for cleaning, make sure that they are cool or use oven gloves.
- **DO NOT** use any abrasive substances on the grill and grill parts.
- **DO NOT** put the side runners in a dishwasher.
- **DO NOT** put the burner heads in a dishwasher.
- **NEVER** use caustic or abrasive cleaners as these will damage the surface.
- **DO NOT** use steel wool, oven cleaning pads or any other materials that will scratch the surface.
- **NEVER** store flammable materials in the drawer. This includes paper, plastic and cloth items, such as cookbooks, plastic ware and towels, as well as flammable liquids.
- **DO NOT** store explosives, such as aerosol cans, on or near the appliance.
- **DO NOT** use steel wool, oven cleaning pads, or any other materials that will scratch the surface.
- **DO NOT** attempt to disassemble or clean around any burner while another burner is on, otherwise an electric shock could result.

2. Cooker Overview

Fig. 2.1

The 90 dual fuel cooker (**Fig. 2.1**) has the following features:

A. 5 hotplate burners including a wok burner

B. A control panel incorporating a timer

C. A glide-out grill

D. Main fan oven

E. Tall fan oven

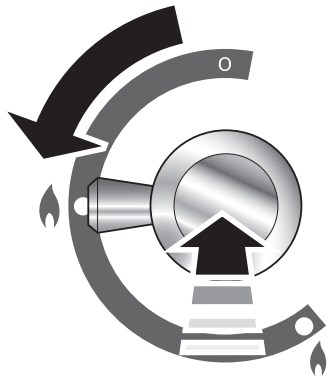

Fig. 2.2

Hotplate Burners

The drawing by each of the central knobs indicates which burner that knob controls.

Each burner has a Flame Supervision Device (FSD) that prevents the flow of gas if the flame goes out.

When the igniter button is pressed in, sparks will be made at every burner – this is normal. Do not attempt to disassemble or clean around any burner while another burner is on, otherwise an electric shock could result.

To light a burner, press the igniter button, and push in and turn the associated control knob to the high position as indicated by the large flame symbol (🔥), (**Fig. 2.2**).

The igniter should spark and light the gas. Keep holding the knob pressed in to let the gas through to the burner for about ten seconds.

Fig. 2.3

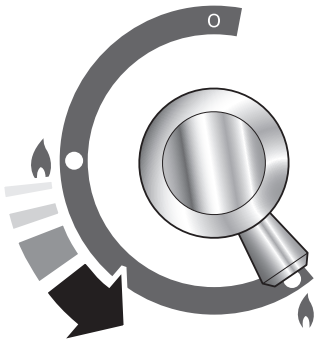

Fig. 2.4

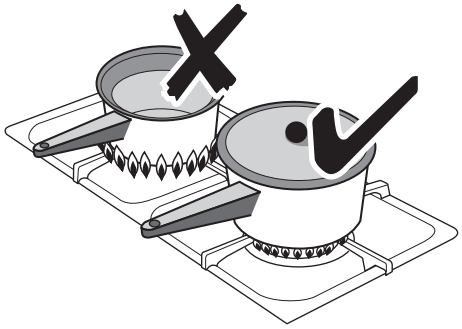

Fig. 2.5

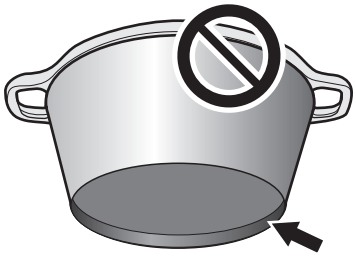

Fig. 2.6

Fig. 2.7

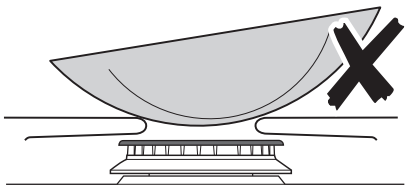

Fig. 2.8

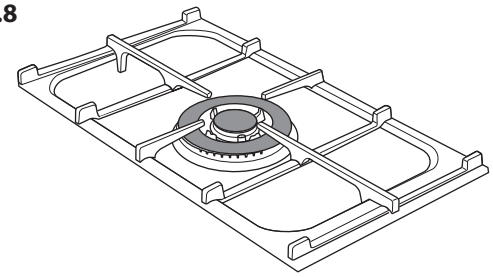

If, when you let go of the control knob, the burner goes out, then the FSD has not been bypassed. Turn the control knob to the OFF position and wait for one minute before you try again, this time making sure to hold in the control knob for slightly longer.

Adjust the flame height to suit by turning the knob counter-clockwise (**Fig. 2.3**).

If a burner flame goes out, turn off the control knob and leave it for one minute before relighting it.

Make sure that the flames are under the pans. Using a lid will help the contents boil more quickly (**Fig. 2.4**).

Large pans should be spaced well apart.

Pans and kettles with concave bases or down-turned base rims should not be used (**Fig. 2.5**).

Simmering aids, such as asbestos or mesh mats, are NOT recommended (**Fig. 2.6**). They will reduce burner performance and could damage the pan supports.

You should also avoid using unstable and misshapen pans that may tilt easily, and pans with a very small base diameter, e.g. milk pans, single egg poachers (**Fig. 2.7**).

The minimum recommended pan diameter is 120 mm. The maximum allowable pan base diameter is 260 mm.

DO NOT use cooking vessels on the hotplate that overlap the edges.

Wok Burner

The wok burner is designed to provide even heat over a large area. It is ideal for large pans and stir-frying (**Fig. 2.8**).

For heating smaller pans, the aforementioned hotplate burners may be more efficient.

You can remove the burner parts for cleaning; see 'Cleaning Your Cooker'.

You should wipe the enamel top surface of the cooker around the hotplate burners as soon as possible after spills occur. Try to wipe them off while the enamel is still warm.

Note: The use of aluminium pans may cause metallic marking of the pan supports. This does not affect the durability of the enamel and may be cleaned off with an appropriate metal cleaner.

The Wok Cradle *(optional extra)*

The wok cradle is designed to fit a 35 cm wok. If you use a different wok, make sure that it fits the cradle. Woks vary very widely in size and shape. It is important that the wok sits down on the pan support – however, if it is too small, the cradle will not support it properly (**Fig. 2.9**).

The cradle should be used on the wok burner only. When you fit the cradle make sure that it is supported properly on a pan support and the wok is sitting level in the cradle (**Fig. 2.10**).

The cradle will get very hot in use – allow plenty of time for it to cool before you pick it up.

The Griddle

The griddle fits the left-hand pan support, front to back (**Fig. 2.11**). It is designed for cooking food on directly. DO NOT use pans of any kind on it. The griddle surface is non-stick and metal cooking utensils (e.g. spatulas) will damage the surface. Use heat resistant plastic or wooden utensils.

⚠ **Do not put it crossways – it will not fit properly and will be unstable (Fig. 2.12).**

⚠ **Do not put it on any other burner – it is not designed to fit in any of the other pan supports.**

Position the griddle over the hotplate burners resting on the pan support. Check that it is securely located.

The griddle can be lightly brushed with cooking oil before use (**Fig. 2.13**). Light the hotplate burners. Adjust the flame heights to suit.

Preheat the griddle for **a maximum of 5 minutes** before adding food. Leaving it longer may cause damage. Turn the control knobs towards the low position, marked with the small flame symbol, to reduce the burner flames.

⚠ **Always leave space around the griddle for the gases to escape.**

⚠ **NEVER fit two griddles side by side (Fig. 2.14).**

After cooking, allow the griddle to cool before cleaning.

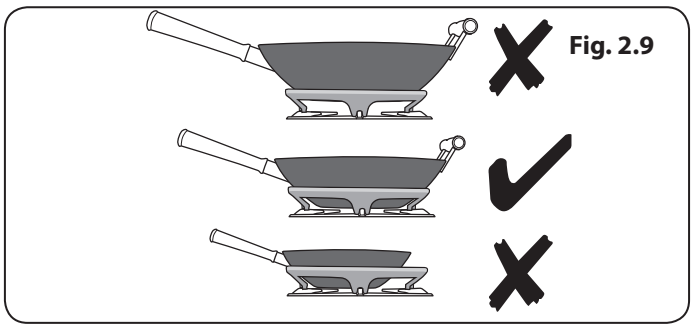

Fig. 2.9

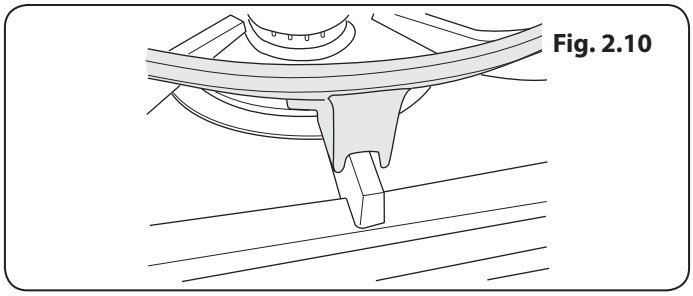

Fig. 2.10

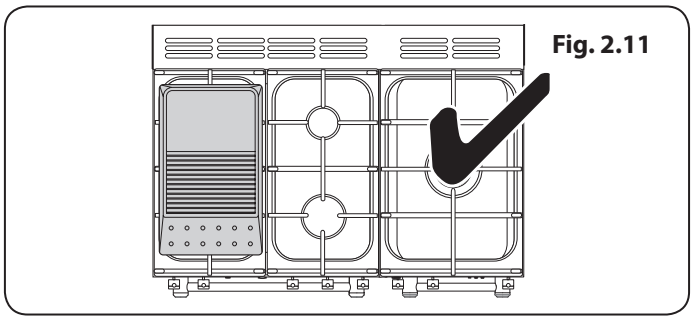

Fig. 2.11

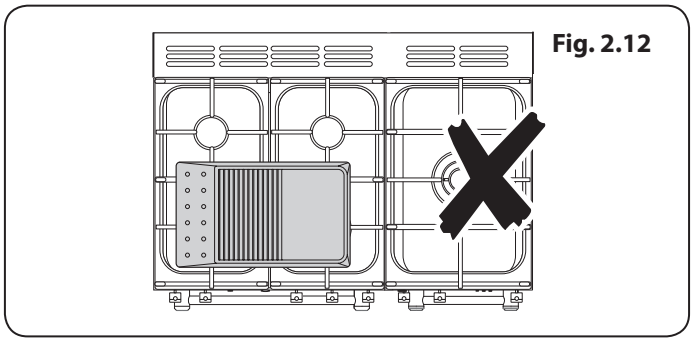

Fig. 2.12

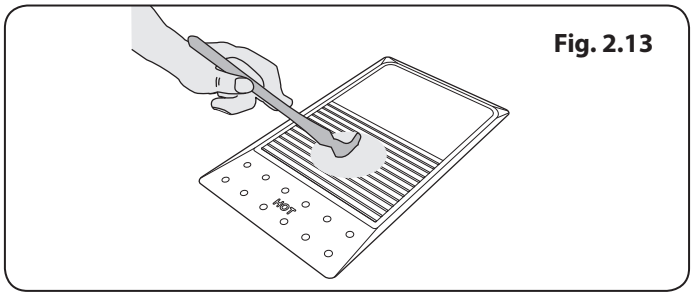

Fig. 2.13

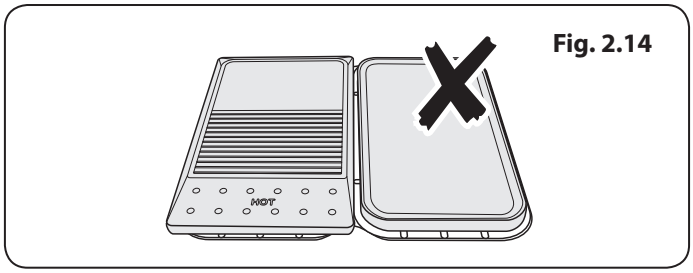

Fig. 2.14

Fig. 2.15

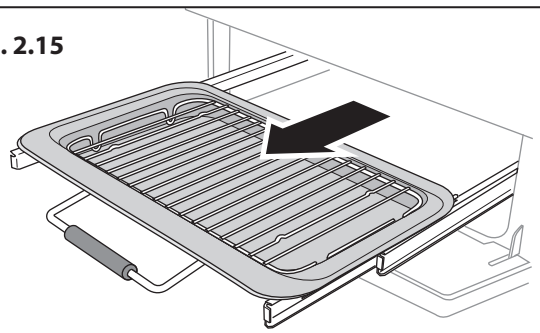

Fig. 2.16

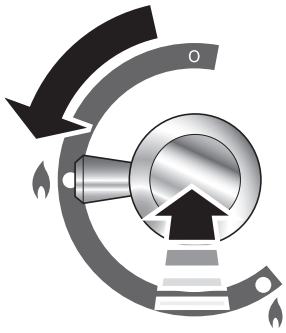

Fig. 2.17

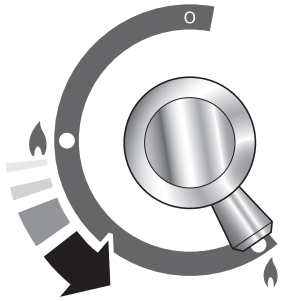

Fig. 2.18

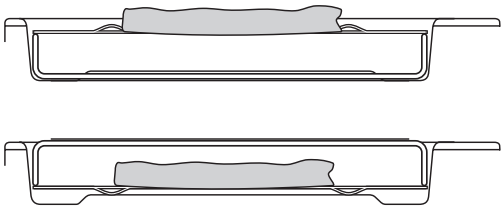

The Glide-out Grill

CAUTION: Accessible parts may be hot when the grill is in use. Young children should be kept away.

Open the door and pull the grill pan carriage forward using the handle (**Fig. 2.15**).

The burner does not glow red when in use; food cooks from the heat of the flame. The first time you light the grill there may be a little smoke given off – this is perfectly normal.

Operation

The grill has a special safety device which stops the flow of gas if the flame goes out.

To turn on the grill, press the igniter button and then press and hold the grill control knob to the large flame symbol (🔥) for about 10 seconds (**Fig. 2.16**).

If, when you release the control knob the burner goes out, then the safety device has not held in. Turn the grill control knob to '0' and wait for one minute. Repeat the operation but hold the button and control knob in for slightly longer.

The low position, marked with the small flame symbol, is beyond high, not between high and off (**Fig. 2.17**).

For best results, slide the carriage back into the grill chamber and preheat the appropriate part(s) of the grill for two minutes. The grill trivet can be removed and the food placed on it while you are waiting for the grill to preheat.

DO NOT leave the grill on for more than a few moments without the grill pan underneath it, otherwise the knobs may become hot.

Once the grill has preheated, slide the carriage out again. With the trivet back in place with the food on it, slide the carriage back into the grill chamber. Make sure that it is pushed right in.

The grill pan trivet can be turned over to give two grilling positions (**Fig. 2.18**).

Do not leave the grill on for more than a few moments, without the grill pan underneath it.

Never close the grill door when the grill is on.

The Ovens

The clock must be set to the time of day before the ovens will work. See the following section on 'The Clock' for instructions on setting the time of day.

References to 'left-hand' and 'right-hand' ovens apply as viewed from the front of the appliance.

The left-hand oven is a programmable gas oven and the right-hand oven is a tall fan oven.

Note: Please remember that all cookers vary so temperatures in your new ovens may differ to those in your previous cooker.

The Gas Oven

The gas oven uses our special 'Heatflow' system.

As the oven burner is not hidden under the oven base you will see the burner flames at the back of the oven (**Fig. 2.19**). This is perfectly normal.

The oven is protected by an electronic ignition system. The gas will ignite at full rate and then modulate down to obtain the desired temperature.

If the flames go out, the system will automatically attempt to re-ignite the gas. After three attempts it will shut off.

Dishes cooking on the central shelf will cook at the temperature indicated on the knob (**Fig. 2.20**).

Dishes placed above the central position will be cooked at approximately 10 °C higher, dishes cooked below approximately 10 °C lower (**Fig. 2.21**). You can therefore cook dishes requiring different temperatures at the same time.

'S' (Slow) Cooking (Left-hand Oven)

The 'S' setting (**Fig. 2.22**) is a very low temperature for slow cooking, overnight or while you are out or at work. The 'S' setting can also be used for keeping food warm.

You can cook on 'S' throughout, or use a 30 minute 'boost' period at gas mark 6 and then 'S' cook.

When roasting joints, poultry or pot roasting, always cook at gas mark 6 for 30 minutes at the beginning of the cooking period.

You can 'S' cook for periods of 6 to 12 hours. This technique is particularly useful if you want to cook a dish overnight or while you are out at work during the day.

⚠ **Frozen foods must be thoroughly thawed out before 'S' cooking.**

⚠ **Whole poultry should not be cooked on 'S'. Chicken casseroles are fine.**

Casseroles must be brought to boiling point on the hotplate immediately before 'S' cooking.

DO NOT stuff poultry and rolled joints before cooking. The stuffing should be cooked separately. Poultry and pork should be cooked in the top half of the oven, and other meats not lower than shelf position 4.

A roasting joint should be covered with cooking foil or with a roasting bag to reduce shrinkage and retain juices.

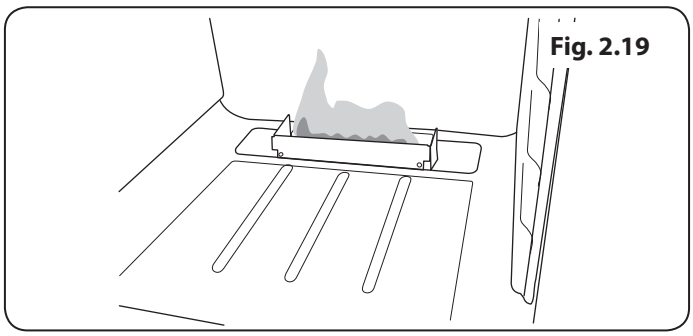

Fig. 2.19

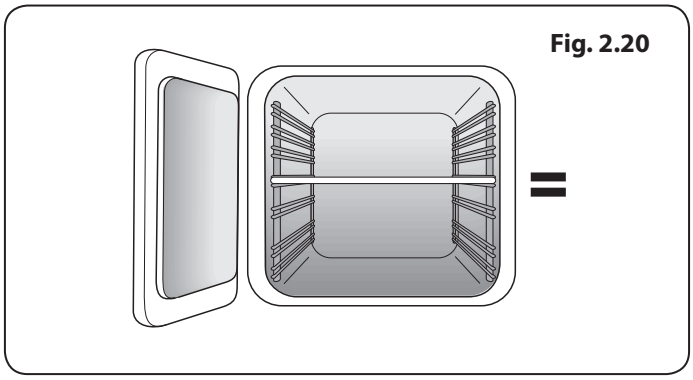

Fig. 2.20

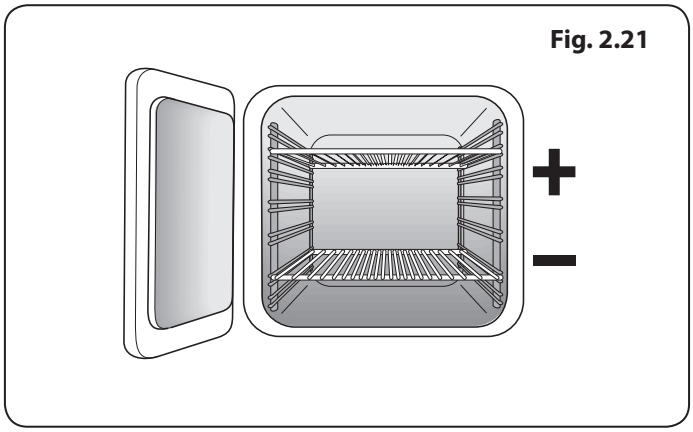

Fig. 2.21

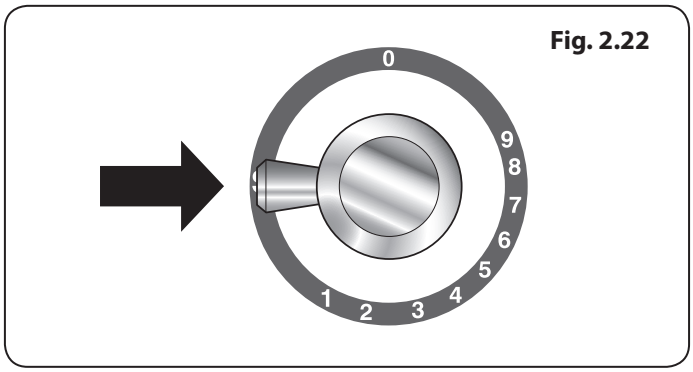

Fig. 2.22

Meat		Temperature
Beef	Rare	60 °C / 140 °F
	Medium	71 °C / 160 °F
	Well done	77 °C / 170 °F
Lamb		82° C / 180 °F
Pork	Fresh	88° C / 190 °F
	Cured	77° C / 170 °F
Poultry		90° C / 195 °F
Veal		77° C / 170 °F

Table 2.1

Fig. 2.23

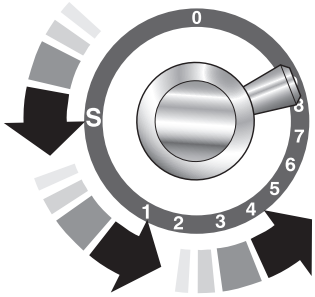

Fig. 2.24

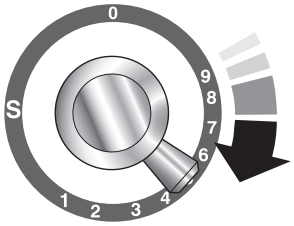

Fig. 2.25

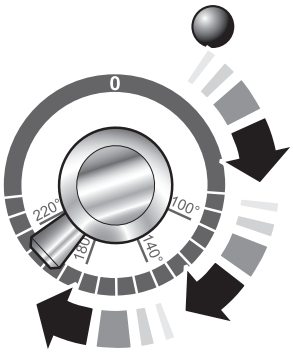

Fig. 2.26

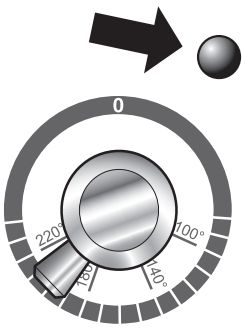

Should further browning be necessary, uncover the meat and increase the temperature to gas mark 4 for a short period.

Cut root vegetables into small pieces unless cooking whole, e.g. jacket potatoes.

Cover dishes tightly with a lid or foil to prevent evaporation and transfer of flavour.

Once the oven has been loaded and the 'S' setting is in operation resist the temptation to open the oven door. Heat will be lost and the cooking time extended.

A meat thermometer is recommended for checking that a joint or poultry is sufficiently cooked. Insert the probe through the thickest part of the meat. For the expected temperatures see **Table 2.1**.

The Fan Oven

The right-hand oven is a fan oven that circulates hot air continuously, which means faster, more even cooking.

The recommended cooking temperatures for a fan oven are generally lower than those for a non-fan oven.

Note: Please remember that all cookers vary so temperatures in your new ovens may differ to those in your previous cooker.

Operating the Ovens

Gas Oven

Push in and turn the knob controlling the oven to gas mark 9 (**Fig. 2.23**). The oven will light automatically.

Turn the oven knob to the desired gas mark (**Fig. 2.24**).

Fan Oven

Turn the oven knob to the desired temperature (**Fig. 2.25**).

The oven indicator light will glow until the oven has reached the temperature selected (**Fig. 2.26**). It will then cycle on and off during cooking.

Accessories

Oven Shelves – Left-hand (Main) Oven

The cooker is supplied with 2 flat shelves (**Fig. 2.27**).

The oven shelves can be easily removed and refitted.

Pull the shelf forward until the back of the shelf is stopped by the shelf stop bumps in the oven sides (**Fig. 2.28**).

Lift up the front of the shelf so the back of the shelf will pass under the shelf stop and then pull the shelf forward (**Fig. 2.29**).

To refit the shelf, line up the shelf with a groove in the oven side and push the shelf back until the ends hit the shelf stop. Lift up the front so the shelf ends clear the shelf stops, and then lower the front so that the shelf is level and push it fully back (**Fig. 2.30**).

Oven Shelves – Right-hand (Tall) Oven

The tall oven is supplied with four flat cooking shelves (**Fig. 2.31**), and a plate warming shelf (**Fig. 2.32**).

When using the tall oven, you can cook on all four shelves at the same time, but make sure that they are well spaced out to allow the hot air to circulate.

The Handyrack (Main Oven)

The Handyrack (**Fig. 2.33**) fits to the left-hand oven door only. Food cooking on it is easy to attend to, because it is accessible when the door is open.

The maximum weight that can be held by the Handyrack is 5.5 kg (12 lb). It should only be used with the supplied roasting tin, which is designed to fit the Handyrack. Any other vessel could be unstable.

It can be fitted at two different heights. One of the oven shelves must be removed and the other positioned to suit.

When the Handyrack is used in its highest position, other dishes can be cooked on the bottom shelf position or base of the oven.

When the Handyrack is used in its lowest position, other dishes can be cooked on the second shelf position or base of the oven.

To fit the Handyrack, locate one side of it on the door bracket (**Fig. 2.34**).

Then spring the other side out to clip it onto the other bracket (**Fig. 2.35**).

Main Oven Light

Press the button to turn the light on (**Fig. 2.36**).

If the oven light fails, turn off the power supply before changing the bulb. See the *'Troubleshooting'* section for details on how to change the bulb.

Fig. 2.27

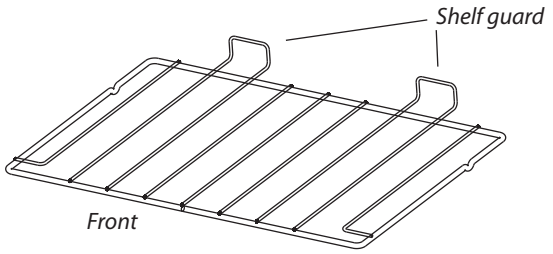

Fig. 2.28

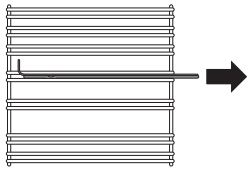

Fig. 2.29

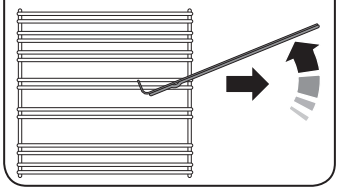

Fig. 2.30

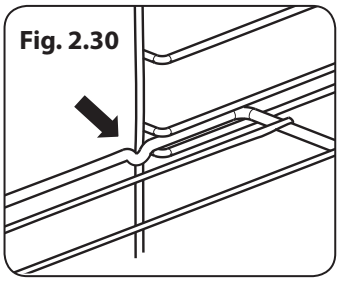

Fig. 2.31

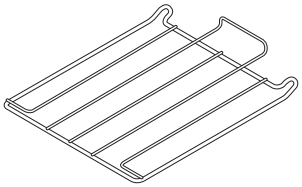

Fig. 2.32

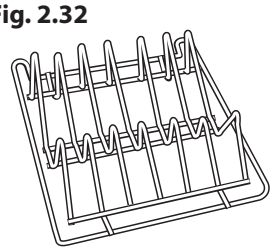

Fig. 2.33

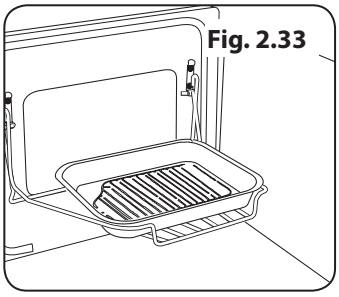

Fig. 2.34

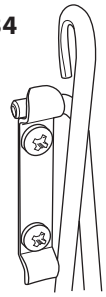

Fig. 2.35

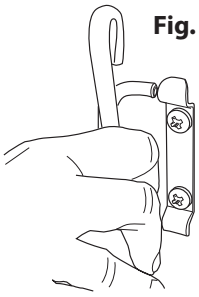

Fig. 2.36

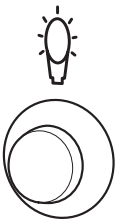

3. 3 Button clock

Fig. 3.1

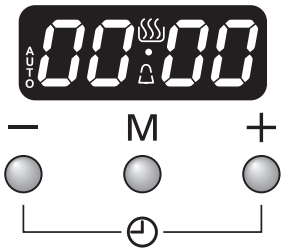

Fig. 3.2

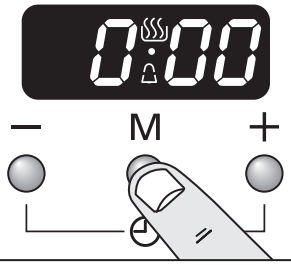

Fig. 3.3

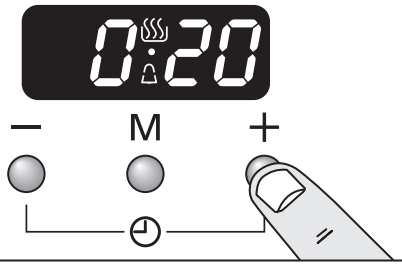

Fig. 3.4

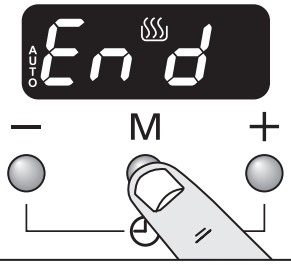

Fig. 3.5

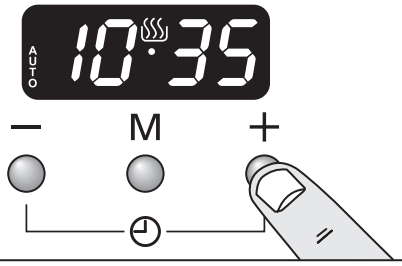

Fig. 3.6

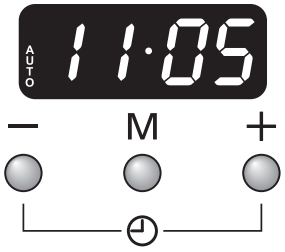

Using the clock

You can use the clock to turn the programmable oven on and off. **The clock must be set to the time of day before the oven will work**.

NOTE: When using the timer functions, first set the clock as required before setting the oven temperature.

The oven can be switched on when the cook symbol [♨] is displayed.

Setting the clock

1. The LCD clock is shown in (**Fig. 3.1**). Once the cooker is connected and switched on, the display flashes (00.00) and the time starts from (00.00).
2. To set the clock press the [+] and [-] buttons simultaneously, the point between hours and minutes will start to flash for 5 seconds. Whilst the point is flashing press either the [+] or [-] button to set the correct time.

IMPORTANT: The timed oven will not operate unless the clock has been set.

Program selection - Setting the minute minder

The minute minder [🔔] provides the ability to set a countdown from 00:01h to 23:59h, at the end of which an alarm will sound.

1. Press the mode [M] button once (**Fig. 3.2**). The bell symbol [🔔] will flash on the display. Select the desired countdown from 00:01h to 23:59h using the [+] button (**Fig. 3.3**). The countdown will automatically begin and the [🔔] symbol will show in the display.
2. Once the specified time has elapsed an alarm will sound.
3. To stop the alarm press any button.

Re-set the minute minder

To re-set the minute minder, first select the minute minder program by pressing the mode [M] button. Then press the [+] and [-] buttons simultaneously.

- The 'cook period', which is the length of time you want the oven to cook for (dur).
- The 'stop time', which is the time of day you want the oven to stop cooking (End).

To stop the programmable oven at a specific time of day

1. Press the mode [M] button 3 times, until the display flashes 'End' (**Fig. 3.4**).
2. Select the 'stop time' using the [+] or [-] buttons. The display will show the current time along with the 'AUTO' and Cooking [♨] symbols (**Fig. 3.5**).

3. When the 'stop time' is reached an alarm will sound and the oven will stop working. The word 'AUTO' will flash on the display (**Fig. 3.6**).

4. Press any button to stop the alarm and return to manual cooking. If the alarm is not stopped, it will stop automatically after 7 minutes.

To start and then stop the programmable oven

Set the programmable oven to automatically start and stop using a combination of the 'cook period' and 'stop time'.

You cannot set a start time directly – this is set automatically by a combination of the 'cook period' and 'stop time'.

1. Press the mode [M] button until the display flashes 'dur' (**Fig. 3.7**). Then set the 'cook period' using the [+] or [-] buttons.

2. Press the mode [M] button until the display flashes 'End' (**Fig. 3.8**). Then set the 'stop time' using the [+] or [-] buttons. Current time will be displayed along with the word 'AUTO' (**Fig. 3.9**).

3. Set the oven to the required cooking temperature.

4. During the 'cook period' the cook symbol [♨] is illuminated in the display.

5. When cooking is finished an alarm will sound. Press any button to stop the alarm and return to manual cooking. If the alarm is not stopped, it will stop automatically after 7 minutes.

AUTO is showing, but you want to revert to manual cooking

You can cancel any automatic settings by pressing the [+] and [-] buttons simultaneously.

Changing the frequency of the alarm

It is possible to change the alarm frequency.

1. Press the the [+] and [-] buttons simultaneously, then the mode [M] button. The display will show 'ton1,2 or 3' (**Fig. 3.10**).

2. To select the tone press the [-] button until desired tone is reached (**Fig. 3.11**).

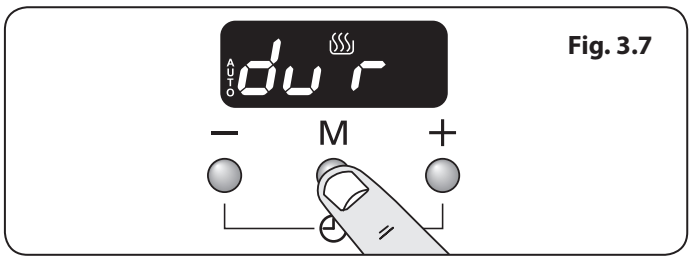

Fig. 3.7

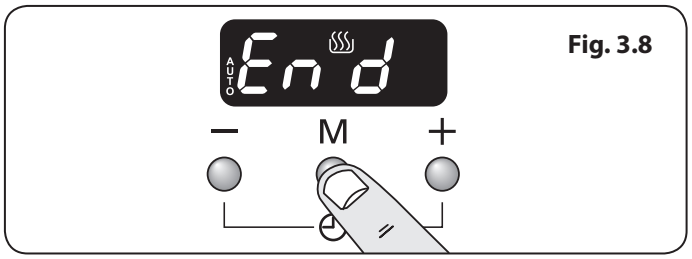

Fig. 3.8

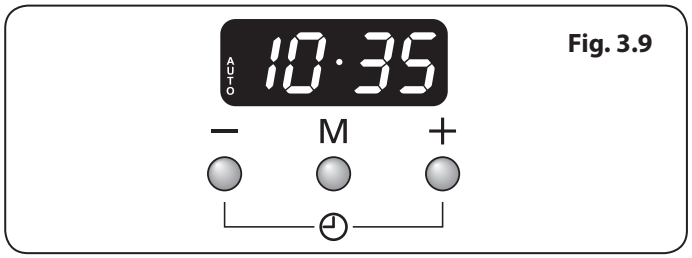

Fig. 3.9

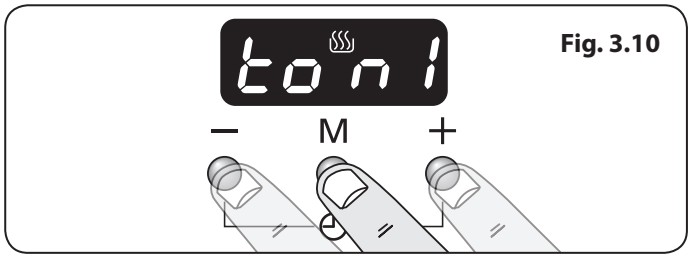

Fig. 3.10

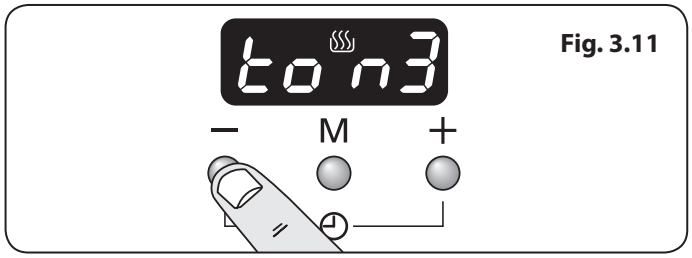

Fig. 3.11

4. Cooking tips

Tips on cooking with the timer

If you want to cook more than one dish, choose dishes that require approximately the same cooking time. However, dishes can be 'slowed down' slightly by using small containers and covering them with aluminium foil, or 'speeded up' slightly by cooking smaller quantities or placing them in larger containers.

Very perishable foods such as pork or fish should be avoided if a long delay period is planned, especially in hot weather.

⚠ **DO NOT place warm food in the oven to be timed.**

⚠ **DO NOT use a timed oven that is already warm.**

⚠ **DO NOT use the timed oven if the adjoining oven is already warm.**

Whole poultry must be thoroughly defrosted before being placed in the oven. Check that meat and poultry are fully cooked before serving.

General oven tips

The wire shelves should always be pushed firmly to the back of the oven.

Baking trays with food cooking on them should be placed level with the front edge of the oven's wire shelves. Other containers should be placed centrally. Keep all trays and containers away from the back of the oven, as overbrowning of the food may occur.

For even browning, the maximum recommended size of a baking tray are:

- depth: 340 mm (13 ⅜") by width: 340 mm (13 ⅜") in the main oven
- depth: 321 mm (12 ⅝") by width: 232 mm (9 ⅛") in the tall oven.

When the oven is on, **DO NOT** leave the door open for longer than necessary, otherwise the knobs may get very hot.

- Always leave a "finger's width" between dishes on the same shelf. This allows the heat to circulate freely around them.
- To reduce fat splashing when you add vegetables to hot fat around a roast, dry them thoroughly or brush lightly with cooking oil.
- Where dishes may boil and spill over during cooking, place them on a baking tray.
- The 'Cook & Clean' oven liners (see 'Cleaning Your Cooker') work better when fat splashes are avoided. Cover meat when cooking with foil or use a roasting bag.
- Sufficient heat rises out of the oven while cooking to warm plates in the grill compartment.
- If you want to brown the base of a pastry dish, preheat the baking tray for 15 minutes before placing the dish in the centre of the tray.

5. Cooking Table

The oven control settings and cooking times given in the table below are intended to be **used as a guide only**. Individual tastes may require the temperature to be altered to provide a preferred result.

Food is cooked at lower temperature in a fan oven than in a conventional oven. When using recipes, reduce the fan oven temperature by 10 °C and the cooking time by 5-10 minutes. The temperature in the fanned oven does not vary with height in the oven so you can use any shelf.

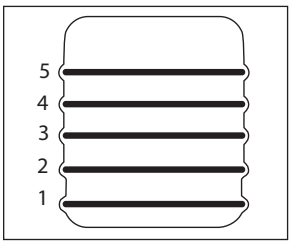

Gas oven shelf positions

Food	Gas Oven Gas Mark (Shelf Position)	Fan Oven Temperature °C	Approximate Cooking Time	
Meat				
Beef (no bone)	3 (3-4)	150	30-35 minutes per 500g +30-35 minutes.	*Thoroughly thaw frozen joints before cooking. Meat may be roasted at Mk.7 (210°C for fan oven) and the cooking time adjusted accordingly. For stuffed and rolled meats, add approximately 10 minutes per 500g, or cook at Mk.6 (190°C) for 20 minutes then Mk.3 (150°C) for the remainder.*
	6 (3-4)	190	20-25 minutes per 500g +20-25 minutes.	
Lamb	3 (3-4)	150	30-35 minutes per 500g +30-35 minutes.	
	6 (3-4)	190	25-30 minutes per 500g +25-30 minutes.	
Pork	3 (2-3)	150	35-40 minutes per 500g +35-40 minutes.	
	6 (3-4)	190	25-30 minutes per 500g +25-30 minutes.	
Poultry				
Chicken	3 (3-4)	150	20-25 minutes per 500g +20-25 minutes.	*For stuffed poultry, you could cook at Mk.6 (190°C) for 20 minutes then Mk.3 (150°C) for remainder. Do not forget to include the weight of the stuffing. For fresh or frozen prepacked poultry, follow instructions on the pack. Thoroughly thaw frozen poultry before cooking.*
	6 (3-4)	190	15-20 minutes per 500g +15-20 minutes.	
Turkey	3 (4)	150	20 minutes per 500g +20 minutes.	
	6 (4)	190	15 minutes per 500g +15 minutes.	
Duck	3 (4)	150	25-30 minutes per 500g.	
	6 (4)	190	20 minutes per 500g.	
Casserole	1-2 (3-4)	130-140	2-4 hours according to recipe.	
Yorkshire pudding	7 (4-5)	210	Large tins 30-35 minutes; individual 10-20 minutes.	
Fish				
Fillet	5 (3)	180	15-20 minutes.	
Whole	5 (3)	180	15-20 minutes per 500g.	
Steak	5 (3)	180	Steaks according to thickness.	
Cake				
Very rich fruit - Christmas, wedding, etc.	1 (2-3)	130	45-50 minutes per 500g of mixture.	*Using the gas oven: when two tier cooking leave at least one runner space between shelves. Position the baking tray with the front edge along the front of the oven shelf.*
Fruit 180 mm tin	2 (2-3)	140	2-2½ hours.	
Fruit 230 mm tin	2 (2-3)	140	Up to 3½ hours.	
Madeira 180 mm	3 (2-3)	150	80-90 minutes.	
Queen cakes	5 (2 & 4 or 3)	180	15-25 minutes.	*Up to three tiers can be cooked in a fan oven at the same time but make sure to leave at least one runner space between each shelf being cooked on.*
Scones	7 (4)	210	10-15 minutes.	
Victoria sandwich				
180 mm tin	4 (2 & 4 or 3)	170	20-30 minutes.	
210 mm tin	4 (2 & 4 or 3)	170	30-40 minutes.	
Desserts				
Shortcrust tarts	6 (2 & 4)	190	20-30 minutes on a preheated tray.	*Using the gas oven: for even browning the maximum size of baking tray recommended is 340mm x 340mm. This ensures free heat circulation. If cooking a two tier load, the trays should be interchanged approximately halfway though the cooking time.*
Fruit pies	6 (2-3)	190	35-45 minutes.	
Tartlets	6 (2-3)	190	10-20 minutes according to size.	
Puff pastry	7 (4)	220	20-40 minutes according to size.	
Meringues	'S' (2)	90	2-3 hours.	
Baked egg custard	3 (3)	150	45-60 minutes.	
Baked sponge pudding	5 (3)	180	40-45 minutes.	
Milk pudding	1-2 (2)	130-140	2 to 3 hours.	
Bread	7 (2 & 4)	210	20-30 minutes.	

6. Cleaning Your Cooker

Fig. 6.1

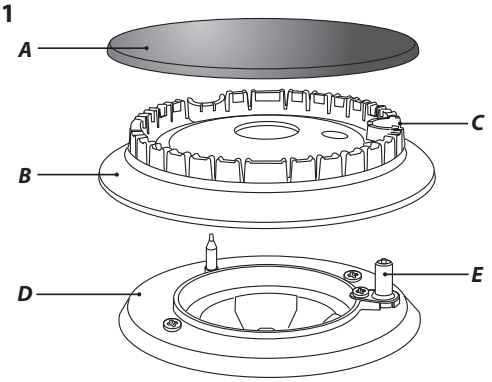

A – Cap, B – Head, C – Notch, D – Base, E – Electrode

Fig. 6.2

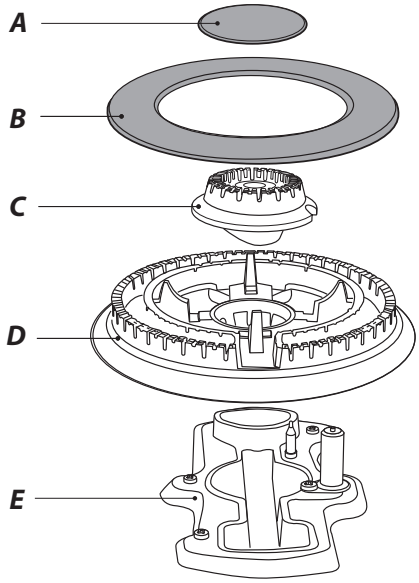

A – Inner burner cap, B – Outer burner cap, C – Inner burner head, D – Outer burner head, E – Wok burner base

Fig. 6.3

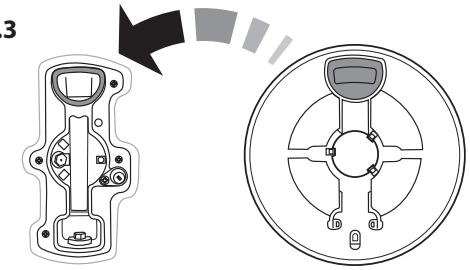

Fig. 6.4

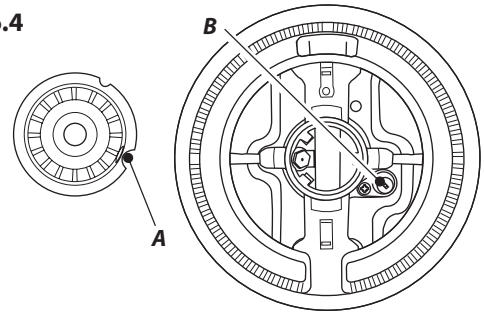

A – Electrode notch, B – Ignition electrode

Essential Information

Isolate the electricity supply before carrying out any thorough cleaning. Allow the cooker to cool.

⚠ **NEVER use paint solvents, washing soda, caustic cleaners, biological powders, bleach, chlorine based bleach cleaners, coarse abrasives or salt.**

⚠ **DO NOT mix different cleaning products – they may react together with hazardous results.**

All parts of the cooker can be cleaned with hot soapy water – **but take care that no surplus water seeps into the appliance**.

Remember to switch on the electricity supply and reset the clock before re-using the cooker.

Hotplate Burners

The burner heads and caps can be removed for cleaning.

⚠ **DO NOT put the burner heads in a dishwasher.**

Make sure they are absolutely dry before replacing them.

The Single Ring Burners

When refitting the burner head, make sure that the notch lines up with the electrode or hole in the base. Check that the burner head is level and that the cap is fitted centrally on the burner head (**Fig. 6.1**).

The Wok Burner

The wok burner can also be taken apart for cleaning.

When reassembling the wok burner (**Fig. 6.2**), turn over the large base ring and find the 'D' shaped area (**Fig. 6.3**). Turn the head until the 'D' matches the one on the burner base. Flip the burner over once again and place it on the burner base.

To fit the small inner burner, find the larger electrode notch in the burner rim. Line this up with the white ignition electrode and place the inner burner on the large base ring (**Fig. 6.4**).

Now fit the two burner caps, making sure that they are seated properly.

Check the burner ports are not blocked. If a blockage occurs, remove stubborn particles using a piece of fuse wire.

The Wok Cradle

Recommended cleaning materials are hot soapy water, a moistened soap pad, cream cleaner or a nylon scourer.

The Griddle

Always clean the griddle after use. Allow it to cool completely before removing. Immerse the griddle plate in hot soapy water. Use a soft cloth or, for stubborn stains, a nylon washing up brush.

Note: If the griddle is washed in a dishwasher then some dishwasher residue may appear on the back. This is normal and will not affect the performance of your griddle.

Glide-out Grill

Before you remove any of the grill parts for cleaning make sure that they are cool, or use oven gloves.

DO NOT use any abrasive substances.

The face of the grill burner will darken with use – this is perfectly normal. Any fat or grease will burn off. Do not try to clean it – the small holes could get blocked and affect burner performance.

The grill pan and trivet (**Fig. 6.5**) should be washed in hot soapy water, alternatively, the grill pan can be washed in a dishwasher.

After grilling meats or any foods that soil, leave to soak for a few minutes in the sink immediately after use. Stubborn particles may be removed from the trivet by using a nylon brush.

The grill pan can be easily removed for cleaning as follows; Remove the grill pan support frame by pulling the grill pan forward (**Fig. 6.5**).

Lift the grill pan clear of the support frame. The support frame is held to the side rails by two clips on each side (**Fig. 6.6**).

For each side, support the side rail with one hand and with the other hand lift the frame up and out of the side clips (**Fig. 6.7**).

For safety, push the side rails back into the grill chamber.

If you need to remove the side rails to allow cleaning of the grill chamber, you can unhook them from the grill chamber sides (**Fig. 6.8**) and wipe the sides clean with a soft cloth and mild detergent.

DO NOT put the side runners in a dishwasher.

Once you have finished, hook the side rails back onto the sides of the chamber. To refit the frame, pull the side rails forward and, for each side in turn, support the side rail and press the frame down into the side rails. Replace the grill pan. When refitting the grill pan, make sure that the wide rim is at the front (**Fig. 6.9**).

Control Panel and Doors

Avoid using any abrasive cleaners including cream cleaners. For best results, use a liquid detergent.

The same cleaner can be used on the doors or alternatively using a soft cloth wrung out in clean hot soapy water – but take care that no surplus water seeps into the appliance.

After cleaning, polish with a dry cloth.

Glass Fronted Door Panels

The oven door front panels can be taken off so that the glass panels can be cleaned. Move the cooker forward to gain access to the sides (see the 'Moving the Cooker' section under 'Installation').

Open the oven door slightly and remove the front panel fixing screws from the door sides, two each side (**Fig. 6.10**).

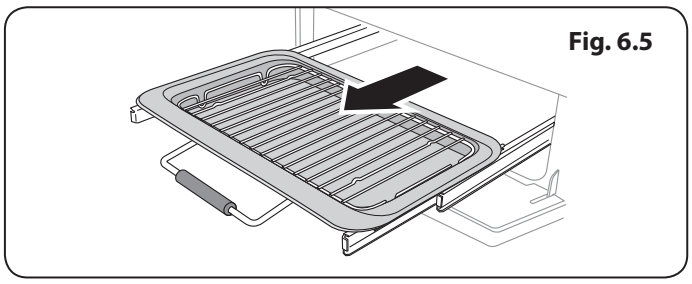
Fig. 6.5

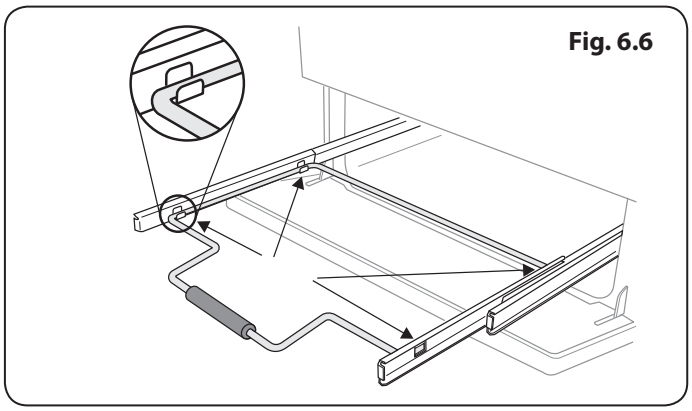
Fig. 6.6

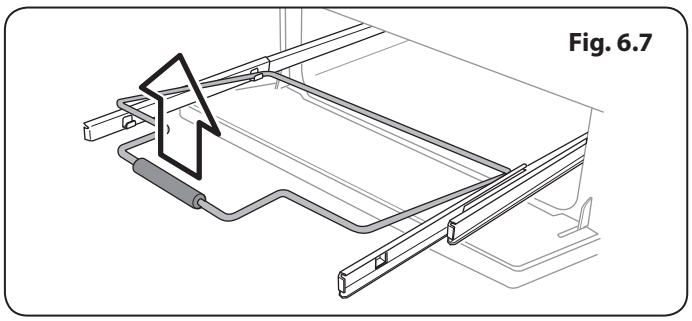
Fig. 6.7

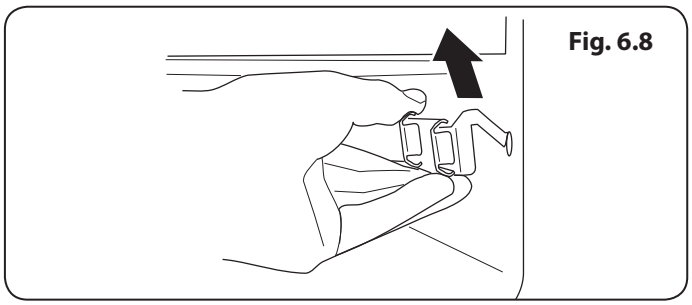
Fig. 6.8

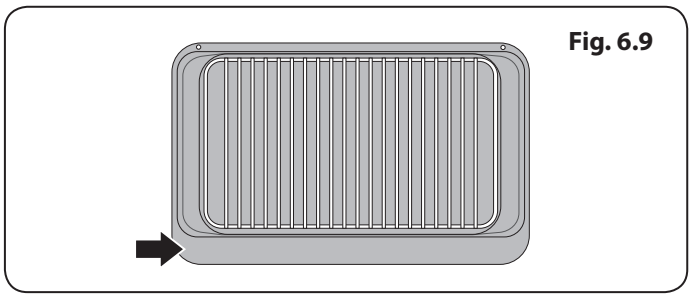
Fig. 6.9

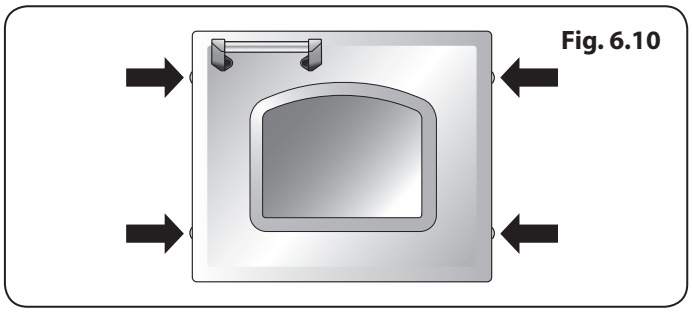
Fig. 6.10

Fig. 6.11

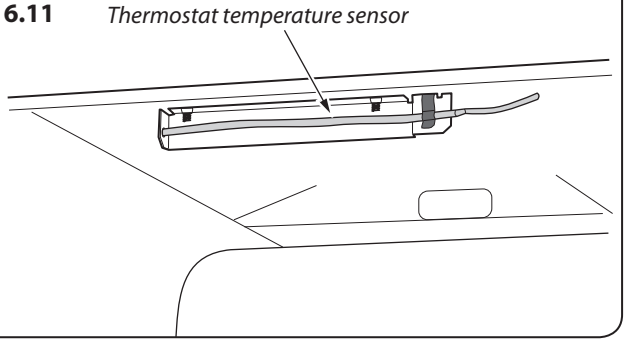

Fig. 6.12

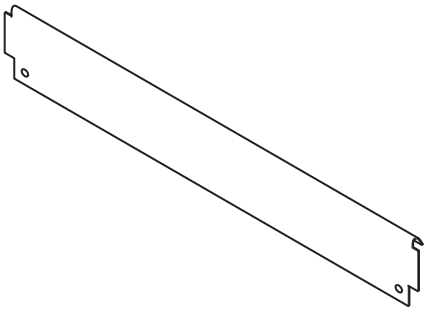

Fig. 6.13

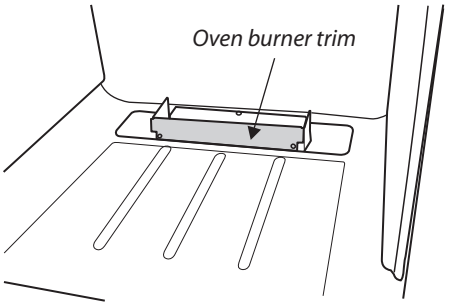

Fig. 6.14

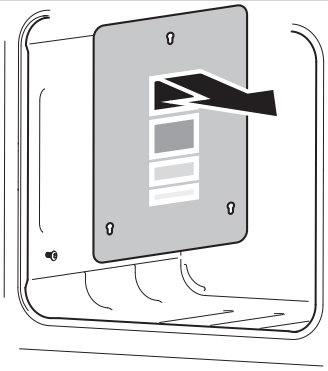

Fig. 6.15

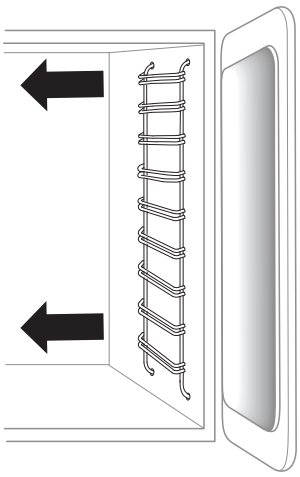

Carefully lift off the outer door panel. The inside face of the glass panels can now be cleaned – take care not to disturb or wet the door insulation.

Note: If the door is triple glazed then the inner two panels are fixed together and should not be separated. After cleaning, carefully refit the outer door panel and replace the side fixing screws.

DO NOT use harsh abrasive cleaners or sharp metal scrapers to clean the oven door glass since they can scratch the surface, which may result in shattering of the glass.

Ovens

Cleaning is easier if carried out while the oven is still warm. Before cleaning, cover the burner to prevent the burner holes becoming blocked.

The inside of the oven and inner door panel can be cleaned using an approved cleaner (**Table 6.1**).

Take care not to disturb the oven thermostat temperature sensor at the top of the oven opening (**Fig. 6.11**).

The enamelled oven burner trim (**Fig. 6.12**) can be removed for cleaning.

The oven burner trim hooks onto the front of the oven burner bracket. When refitting make sure that the trim is in the middle of the front of the oven burner bracket (**Fig. 6.13**).

'Cook & Clean' Panels

The ovens have panels which have been coated with a special enamel that partly cleans itself. This does not stop all marks on the lining, but helps to reduce the amount of manual cleaning needed.

The 'Cook & Clean' panels work better above 200 °C. If you do most of your cooking below this temperature, occasionally remove the panels and wipe with a lint free cloth and hot soapy water. The panels should then be dried and replaced and the oven heated at 200 °C for about one hour. This will make sure that the 'Cook & Clean' panels are working effectively.

Do not use steel wool, oven cleaning pads, or any other materials that will scratch the surface.

Removing the Panels to Clean the Enamel Interior

Some of the lining panels can be removed for cleaning.

If you wish to clean the enamel interior of the oven, you will need to remove the shelves before removing the 'Cook & Clean' panels . You do not have to remove the support brackets to remove the panels. Lift each panel upward and slide forward off the support brackets (**Fig. 6.14**).

Once the panels have been removed, the oven enamel interior can be cleaned.

Refit in the reverse order.

The Tall Oven

To clean the oven sides, slide out the shelves, unhook the supports from the oven sides and lift out (**Fig. 6.15**).

Cleaning Table

Cleaners listed (**Table 6.1**) are available from supermarkets or electrical retailers as stated.

For enamelled surfaces use a cleaner that is approved for use on vitreous enamel.

Regular cleaning is recommended. For easier cleaning, wipe up any spillages immediately.

Hotplate		
Part	**Finish**	**Recommended Cleaning Method**
Hob top (including burner heads and caps)	Enamel, stainless steel, aluminium	Hot soapy water, soft cloth. Any stubborn stains remove gently with a nylon scourer.
Griddle plate (some models only)	Non-stick surface	Allow to cool. Wash in hot soapy water. Do not use abrasive cleaners/ scourers. Dishwasher.
Warming zone (some models only)	Toughened glass	Hot soapy water, cream cleaner/scourer if necessary.
Outside of Cooker		
Part	**Finish**	**Recommended Cleaning Method**
Door, door surround and storage drawer exterior	Enamel or paint	Hot soapy water, soft cloth. Any stubborn stains, remove gently with a liquid detergent.
	Stainless steel	E-cloth (electrical retailers) or microfibre all-purpose cloth (supermarket).
Sides and plinth	Painted surface	Hot soapy water, soft cloth.
Splashback/rear grille	Enamel or stainless steel	Hot soapy water, soft cloth. Cream cleaner, with care, if necessary.
Control panel	Paint, enamel or stainless steel	Warm soapy water. Do not use abrasive cleaners on lettering.
Control knobs/handles & trims	Plastic/chrome, copper or lacquered brass	Warm soapy water, soft cloth.
	Brass	Brass polish.
Oven door glass/glass lid	Toughened glass	Hot soapy water, cream cleaner/scourer if necessary.
Oven and Grill		
Part	**Finish**	**Recommended Cleaning Method**
Sides, floor & roof of oven NOT 'COOK & CLEAN' OVEN PANELS (see below)	Enamel	Any proprietary oven cleaner that is suitable for enamel. CAUTION: CORROSIVE/CAUSTIC OVEN CLEANERS: FOLLOW MANUFACTURER'S INSTRUCTIONS. Do not allow contact with the oven elements.
'Cook & Clean' oven panels (some models only)	Special enamel that partly cleans itself	This surface cleans itself at 200 °C and above, or the panels can be removed and washed with hot soapy water and a nylon brush.
Oven shelves, Handyrack, grill trivet, Handygrill rack (some models only)	Chrome	An oven interior cleaner that is suitable for chrome. Soap filled pad. Dishwasher.
Grill pan/meat tin (some models only)	Enamel	Hot soapy water. Soap filled pad. Dishwasher.

Table 6.1

7. Troubleshooting

Hotplate/Cooktop ignition or hotplate burners faulty

Is the power on? Is the clock illuminated?

If not, there maybe something wrong with the power supply.

Are the sparker (ignition electrode) or burner slots blocked by debris?

Are the burner trim and caps correctly located? See the section on 'Cleaning'.

Hotplate/Cooktop burners will not light

Make sure that the burner parts have been replaced correctly after wiping or removing for cleaning.

Check that there is not a problem with your gas supply. You can do this by making sure that other gas appliances you may have are working.

Do the burners spark when you push the button?

If not, verify that the power is on by checking that the clock is illuminated.

Steam is coming from the oven

When cooking foods with high water content (e.g. oven fries) there may be some steam visible at the rear grille.

Take care when opening the oven door, as there may be a momentary puff of steam when the oven door is opened. Stand well back and allow any steam to disperse.

What cleaning materials are recommended for the cooker?

See the 'Cleaning' section for recommended cleaning materials.

Never use caustic or abrasive cleaners as these will damage the surface.

An oven fan is noisy

The note of the oven fan may change as the oven heats up – this is perfectly normal.

If there is an installation problem and I don't get my original installer to come back to fix it who pays?

You do. Service organizations will charge for their call outs if they are correcting work carried out by your original installer. It is in your interest to track down your original installer.

Power failure

In the event of a failure in the electrical supply, remember to reset the clock to make sure that the timed oven continues to operate.

Food is cooking too slowly, too quickly, or burning

Cooking times may differ from your previous oven.

Check that you are using the recommended temperatures and shelf positions – see the oven cooking guide. The oven control settings and cooking times are intended to be used only as a guide.

Individual tastes may require the temperature to be altered either way, to get the results you want.

The oven is not cooking evenly

DO NOT use a baking tray with dimensions larger than those specified in the section on 'General Oven Tips'.

If you are cooking a large item, be prepared to turn it round during cooking.

If two shelves are used, check that space has been left for the heat to circulate. When a baking tray is put into the oven, make sure that it is placed centrally on the shelf.

Check that the door seal is not damaged and that the door catch is adjusted so that the door is held firmly against the seal.

A dish of water when placed on the shelf should be the same depth all over. (For example, if it is deeper at the back, then the back of the cooker should be raised up or the front lowered.) If the cooker is not level, arrange for your supplier to level it for you.

Oven not coming on

Is the power on? Is the clock illuminated? If not, there may be something wrong with the power supply.

Is the cooker supply on at the isolator switch?

Has the time of day been set?

The timed oven is not coming on when automatic cooking

Has the oven knob been left in the OFF position by mistake?

Oven temperature getting hotter as the cooker gets older

If turning the temperature down using the oven control knob has not worked, or has only worked for a short time, then you may need a new thermostat. This should be fitted by a qualified service person.

Oven light is not working

The bulb has probably burnt out. You can buy a replacement bulb (which is not covered under the warranty) from a good electrical shop. Ask for a 15W – 230V lamp, FOR OVENS. It must be a special bulb, heat resistant to 300°C (**Fig. 7.1**).

Turn off the power at the circuit breaker.

Before removing the existing bulb, turn off the power supply and make sure that the oven is cool. Open the oven door and remove the oven shelves.

Unscrew the bulb cover by turning counter-clockwise. It may be very stiff (**Fig. 7.2**).

Taking care to protect your fingers with a glove in case the bulb should shatter, unscrew the old bulb.

Screw in the new bulb; screw back the bulb cover. Turn on the circuit breaker and check that the bulb now lights.

The left-hand oven door is misaligned

The bottom hinge of the left-hand oven door can be adjusted to alter its angle **(Fig. 7.3)**.

Loosen the bottom hinge fixing screws and use the notch and a flat bladed screwdriver to move the position of the hinge to set the hinge position **(Fig. 7.4)**.

Retighten the hinge screws.

NOTE: The tall oven door cannot be adjusted

The fascia gets hot when I use the oven or grill

The cooker is cooled by a fan. If the fascia becomes excessively hot when the cooker is in use then the cooling fan may have failed. Should this occur please contact your installer, a qualified repair engineer or Customer Service to arrange for its repair.

The knobs get hot when I use the oven or the grill. Can I avoid this?

Yes, this is caused by heat rising from the oven or the grill, and heating them up. **DO NOT** leave the oven door open.

Make sure that the grill pan is pushed right back to the 'back stop' when grilling.

Always grill with the grill compartment door open.

Fig. 7.1

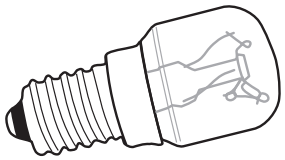

Fig. 7.2

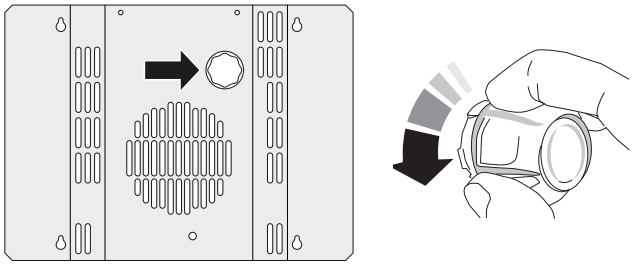

Fig. 7.3

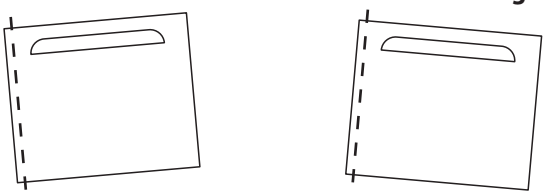

Effect of hinge adjustment – exaggerated for clarity

Fig. 7.4

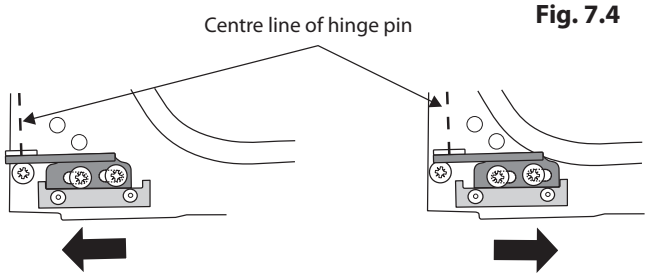

Oven door omitted for clarity

8. Installation

Service and Spares

Firstly, please complete the appliance details below and keep them safe for future reference – this information will enable us to accurately identify the particular appliance and help us to help you. Filling this in now will save time and inconvenience if you later have a problem with the appliance. It may also be of benefit to keep your purchase receipt with this leaflet. You may be required to produce the receipt to validate a warranty field visit.

Distributor's Name and Address	Andi-Co Australia Pty Ltd. 1 Stamford Road, Oakleigh, VIC 3166 Customer Care Tel: 1300 650 020 Email: service@andico.com.au
Name of Appliance	
Appliance Serial Number*	
Fuel Type	Gas
Date of Purchase	
Installer's Name, Address and Telephone No.	
Date of Installation	

* This information is on the appliance data badge.

If You Have a Problem

In the unlikely event that you have a problem with your appliance, please refer to rest of this booklet, especially the problem solving section, first to check that you are using the appliance correctly.

If you are still having difficulty, contact Customer Care on 1300 650 020 or email service@andico.com.au.

Please Note

For warranty information and how to request a remedy, please refer to the warranty document provided with the appliance or contact Customer Care.

Out of Warranty

We recommend that our appliances are serviced regularly throughout their life to maintain the best performance and efficiency. The frequency of service will depend on usage – for normal usage once a year should suffice.

Service work should only be carried out by a suitably Authorised Person.

Spare Parts

To maintain optimum and safe performance, we recommend that only genuine spare parts are used. Do not use re-conditioned or unauthorised controls. Contact Spare Parts on (03) 9569 7744 or email spares@andico.com.au.

Safety Requirements and Regulations

Please read the Before you start... chapter, before you begin any installation and maintenance work on this appliance.

You must be aware of the following safety requirements & regulations.

Before installation, make sure that the local distribution conditions (nature of the gas and gas pressure) and the adjustment of the appliance are compatible.

The appliance must be installed in accordance with the regulations in force and only in a well ventilated space.

Read the instructions before installing or using this appliance.

The regulations and standards are as follows:

- AS/NZS 5601 – 'Gas Installations'
- AS/NZS 3000 - 'Wiring Rules'

In your own interest and that of safety, it is law that all gas appliances be installed by competent persons.

Failure to install the appliance correctly could invalidate any warranty or liability claims and lead to prosecution.

The appliance must be installed in accordance with all local gas fitting regulations, municipal building codes, electrical wiring regulations and any other relevant statutory regulations.

WARNING!
Where this appliance is installed in marine craft, in caravans or in mobile homes it shall NOT be used as a space heater.

Provision of Ventilation

This appliance is not connected to a combustion products evacuation device. Particular attention shall be given to the relevant requirements regarding ventilation in accordance with AS/NZS 5601.

The room containing the cooker should have adequate air supply.

Install the appliance in a location to allow the complete combustion of gas, proper flueing and to maintain ambient temperature of the immediate surroundings at safe limits, under normal condition.

Location of Cooker

The cooker may be installed in a kitchen/kitchen diner but NOT in a room containing a bath or shower.

Note: An appliance for use on Propane must not be installed in a room or internal space below ground level, e.g. in a basement.

Conversion

This appliance is supplied set for use on Natural gas. A conversion kit for Propane gas is included with the appliance. See the instructions that are supplied with the conversion kit.

After converting the appliance, please attach the Gas Conversion sticker over the appropriate area of the data badge - this will identify the gas type for which the appliance is now set.

INSTALLATION

Check the appliance is electrically safe and gas sound when you have finished.

You will need the following equipment to complete the cooker installation satisfactorily:

- Flexible gas hose.
- Gas pressure tester/manometer.
- Multimeter: For electrical checks.

You will also need the following tools:

1. Electric drill
2. Masonry drill bit (only required if fitting the cooker on a stone or concrete floor)
3. Wall plugs (only required if fitting the cooker on a stone or concrete floor)
4. Steel tape measure
5. Cross head screwdriver
6. Flat head screwdriver
7. 4 mm & 3 mm Allen keys
8. Spirit level
9. Pencil
10. Adjustable spanner
11. 13 mm spanner or socket wrench
12. Screws for fitting the restraining chain and bracket

Checking the Parts:

3 pan supports	Plinth
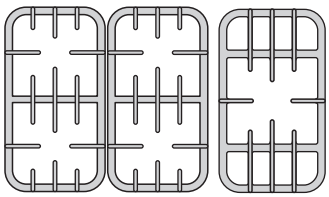	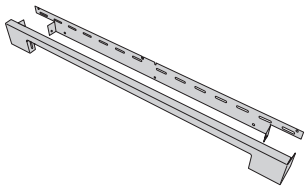
Griddle plate	Grill pan & trivet
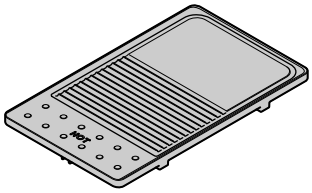	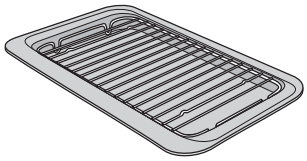
Flat shelves	Roasting tin
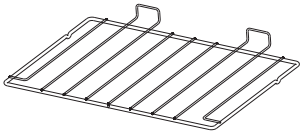	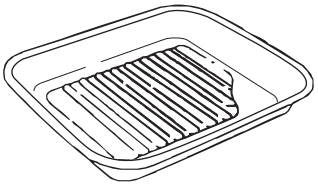
Handyrack	Tall oven shelves & shelf supports
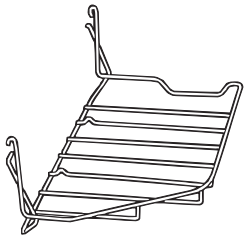	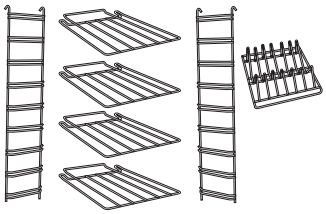
Splashback	Restraining chain & hook
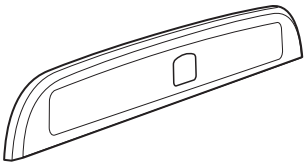	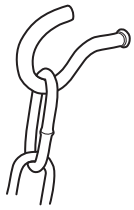
Stability bracket	Stability location bracket
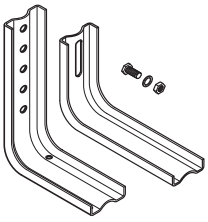	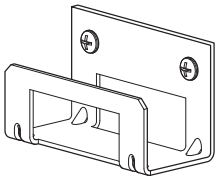

Positioning the Cooker

The diagram (**Fig. 8.1**) shows the minimum recommended distance from the cooker to nearby surfaces as given in AS/NZS 5601.

Where the appliance is installed next to cabinetry, the cabinet material must be capable of withstanding 70°C. If this appliance is installed near vinyl wrapped surfaces, use an installation kit available from the vinyl-wrap supplier. Falcon cannot accept any responsibility for damage caused due to installation into cabinets with low temperature tolerances.

* Any splashback must be fitted in accordance with the manufacturers instructions. Allowance should be made for the additional height of the flue trim, which is fitted to the cooker hob.

1. Overhead – Measurement A

The minimum height of any surface above the cooker is 650 mm above the hotplate.

Cookerhoods and exhaust fans shall be installed in accordance with the manufacturer's instructions. However, in no case shall the clearance between the highest part of the hob of the cooking appliance and a cookerhood be less than 650 mm or, for an overhead exhaust fan, 750 mm.

2. Side Clearances – Measurements B & C

Where **B**, measured from the periphery of the nearest burner to any vertical combustible surface, or vertical combustible surface covered with toughened glass or sheet metal, is less than 200 mm, the surface shall be protected to make sure that the combustible surface does not exceed 65 °C above ambient*. Even with the surface protected, the dimension B should not be less than 135 mm above hotplate level.

**The fixing of 5mm thick ceramic tiles to the surface, or attaching fire resistant material to the surface and covering with sheet metal with a minimum thickness of 0.4 mm to a height C of not less than 150 mm above the hotplate, should satisfy this requirement.*

3. 3. Side Clearances – Measurement D & E

Where **D**, the distance from the periphery of the nearest burner to a horizontal combustible surface is less than 200 mm, then **E** shall be 10 mm or more, or the horizontal surface shall be above the trivet.

A clearance of 130 mm is required if the cooker is near a corner of the kitchen, to allow the oven doors to open (**Fig. 8.2**). The actual opening of the doors is slightly less, but this allows for some protection of your hand as you open the door.

DO NOT place the cooker on a base

For safety reasons, curtains must not be fitted immediately behind the cooker.

We recommend a gap of 910 mm between units to allow for moving the cooker. Do not box the cooker in it must still be possible to move the cooker in and out for cleaning and servicing.

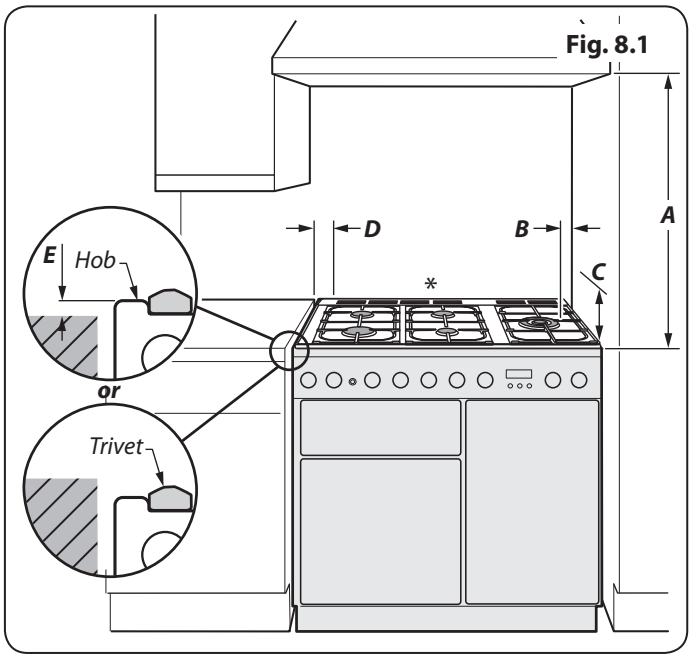

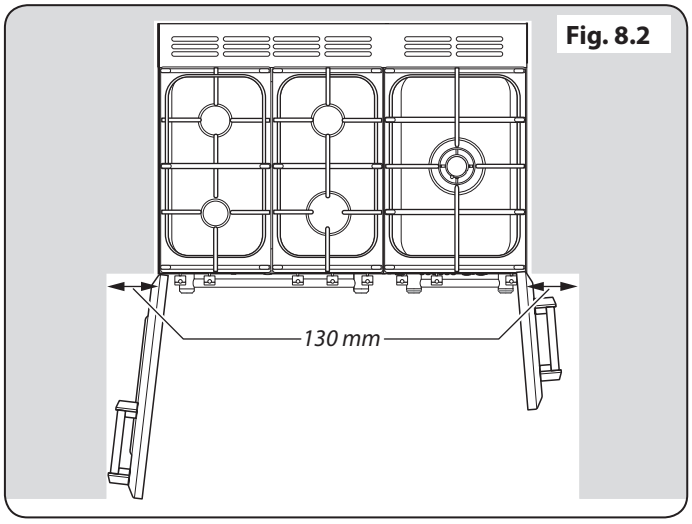

Fig. 8.3

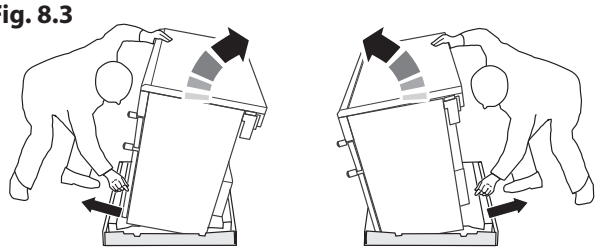

Fig. 8.4

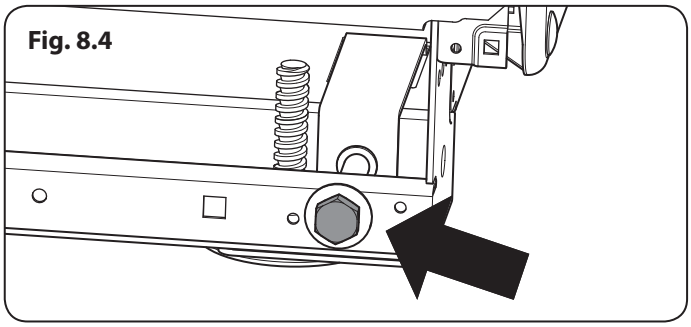

Fig. 8.5

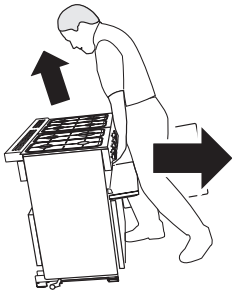

Moving the Cooker

⚠ **On no account try and move the cooker while it is plugged into the electricity supply.**

⚠ **The cooker is very heavy, so take great care.**

We recommend that two people manoeuvre the cooker. Make sure that the floor covering is firmly fixed, or removed, to prevent it being disturbed when moving the cooker around.

To help you, there are two levelling rollers at the back, and two screw-down levelling feet at the front.

Remove the polystyrene base pack. From the front, tilt the cooker backwards and remove the front half of the polystyrene base (**Fig. 8.3**).

Repeat from the back and remove the rear half of the polystyrene base.

Lowering the Two Rear Rollers

To adjust the height of the rear of the cooker, first fit a 13 mm spanner or socket wrench onto the hexagonal adjusting nut (**Fig. 8.4**). Rotate the nut – clockwise to raise – counter-clockwise to lower.

Make 10 complete (360°) turns clockwise.

Make sure you lower **BOTH REAR ROLLERS**.

Completing the Move

Unfold the rear edge of the cardboard base tray. Open the grill door and right-hand oven door so that you can get a good grip on the bottom of the fascia panel as you move the oven (**Fig. 8.5**).

Carefully push the cooker backwards off the base tray. Remove the base tray.

Position the cooker close to its final position, leaving just enough space to get behind it.

⚠ **Do not use the door handles or control knobs to manoeuvre the cooker.**

Fitting the Stability Bracket and Chain

A stability bracket and chain MUST be fitted when the cooker is connected to a flexible gas supply.

Unless properly installed, the cooker could be tipped by leaning on the door. Injury might result from spilled hot liquids or from the cooker itself.

IMPORTANT: The cooker must be set to the correct height and levelled before the stability bracket is installed.

Levelling

You are recommended to use a spirit level on a shelf in one of the ovens to check for level.

Place the cooker in its intended position taking care not to twist it within the gap between the kitchen units as damage may occur to the cooker or the units.

The front feet and rear rollers can be adjusted to level the cooker. To adjust the height of the rear of the cooker use a 13 mm spanner or socket wrench to turn the adjusting nuts at the front bottom corners of the cooker.

To set the front, turn the feet bases to raise or lower.

Fitting the Stability Bracket

When fitting the stability bracket; first attach the bracket location device to the rear of the cooker (**Fig. 8.6**). Then adjust the bracket to engage through the slot of the device (**Fig. 8.7** and **Fig. 8.8**).

Fitting the Restraining Chain

The restraining chain MUST be fitted.

The length of chain between the appliance and the wall fixing should prevent strain on the gas and electricity connections, but still allow access to unhook the chain when the cooker is pull forward.

Measure the length of chain required. Use the clamp supplied to clamp onto the gas pipe (**Fig. 8.9**). Fix the supplied hook securely to the wall.

Repositioning Following Connection

If you need to move the cooker once it has been connected then you need to unplug it and, having gripped under the fascia panel and lifted the front of the cooker slightly **(Fig. 8.5)**, you need to check behind the cooker to make sure that the gas hose is not caught.

As you progress, make sure that both the electricity cable and gas hose always have sufficient slack to allow the cooker to move.

With a stability chain fitted, release it as you ease the cooker out. Do not forget to refit it when you replace the cooker.

When you replace the cooker, again check behind to make sure that the electricity cable and gas hose are not caught or trapped.

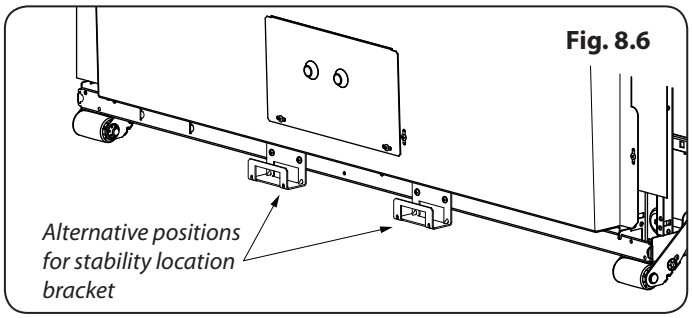

Fig. 8.6

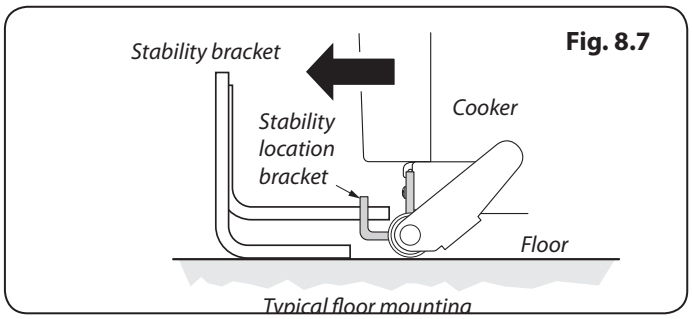

Fig. 8.7

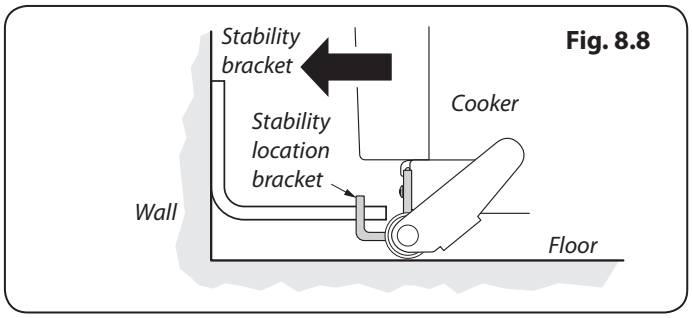

Fig. 8.8

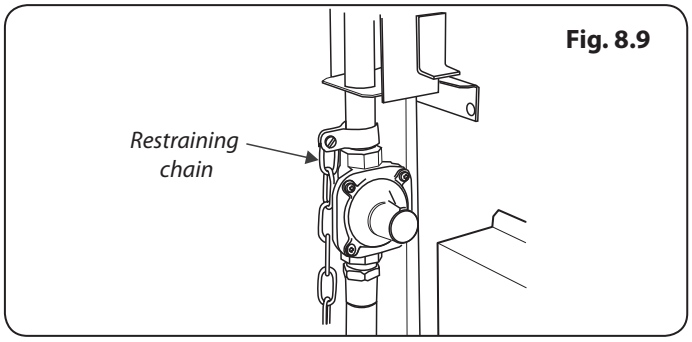

Fig. 8.9

Fig. 8.10

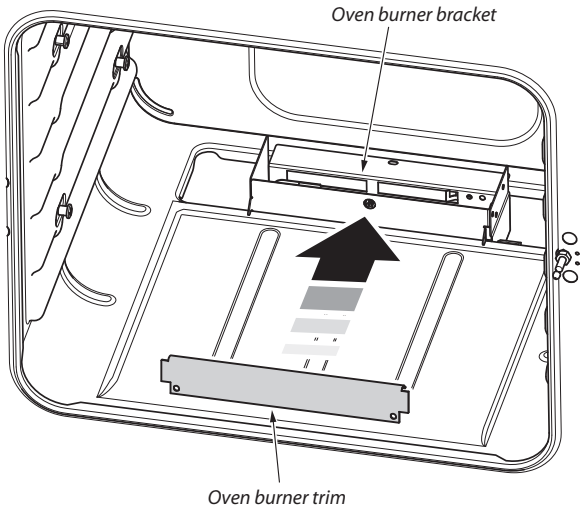

Fig. 8.11

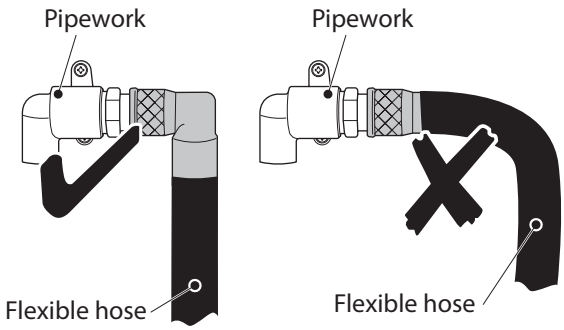

Fig. 8.12

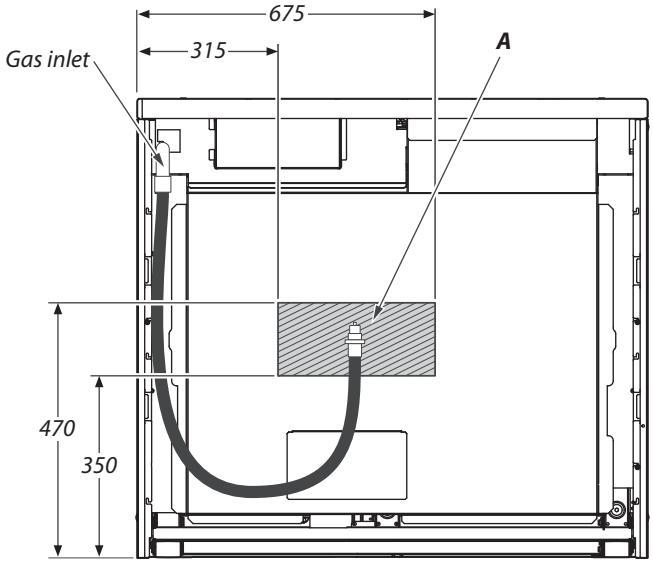

All dimensions in millimetres

Fitting the Oven Burner Trim

The oven burner has an enamel burner trim. To fit the trim, simply hook it over the front of the oven burner bracket (**Fig. 8.10**). Make sure that the burner trim is central to the oven burner bracket.

Gas Connection

Must be in accordance with the relevant standards.

The gas supply needs to terminate with a down-facing (**Fig. 8.11**) threaded fitting ½" connection. The inlet connector is located just below the hotplate level at the rear of the cooker.

Because the height of the cooker can be adjusted and each connection is different it is difficult to give precise dimensions. Ideally, the house supply connection should be in the shaded area (**Fig. 8.12**).

Means of isolation must be provided at the supply point by either an approved quick-connect device or a Type 1 manual shut-off valve.

The hose should be fitted so that both inlet and outlet connections are vertical so that the hose hangs downwards in a 'U' shape (**Fig. 8.12**).

A flexible connection is supplied with the cooker. If it is necessary to use another hose it must be to AS 1869 Class B and be suitable for your gas type.

If in doubt contact your supplier. Screw connect the threaded end of the hose into the gas inlet.

After completing the gas connection, check the cooker is gas sound with a pressure test. When checking for gas leakes do not use washing up liquid – this can corrode. Use a product specifically manufactured for leak detection.

Natural Gas

The gas pressure regulator is present to give a nominal pressure of 1 kPa on Natural gas. Connect to the Rp ½ inlet on the underside of the pressure regulator.

Propane

This cooker is supplied ready for use on natural gas. A conversion kit for Propane as is supplied with the cooker – see the 'Conversion to Propane Gas' section.

Pressure Testing

The pressure test point is accessible on the inlet pipe at the rear. Remove the test nipple screw and fit a pressure gauge to the test point. Turn on and light two of the hotplate burners.

For Natural Gas cookers the pressure should be between 0.95kPa and 1.0kPa.

For Propane X cookers the pressure should be 2.54 kPa.

Electrical Connection

WARNING: THIS COOKER MUST BE EARTHED.

This appliance must be installed by a qualified electrician to comply with with current AS/NZS 3000 Wiring Rules and regulations in force.

All external wiring must comply with the local regulations for the Electrical Equipment of Buildings. Connection to the electrical supply can be made with either a plug and socket or be permanently wired via a double-pole switch, having a contact separation of at least 3 mm in all poles.

Current Operated Earth Leakage Breakers

The combined use of your cooker and other domestic appliances may cause nuisance tripping, so we recommend that the cooker is protected on an individual RCD (Residual Current Device) or RCBO (Residual Current Breaker with Overload).

If in doubt, please consult a suitably qualified electrician.

The appliance is supplied with a 250 V high temperature PVC (85 °C) 3-core cable, 0.75 mm^2, 2 m long. If a replacement cable is fitted it must be to this specification. The cooker is supplied with a moulded plug fitted. Should the plug (where supplied) not fit the socket in your home, it should be removed and replaced with a suitable plug.

Note: If a moulded plug is fitted which is not suitable, it must be cut off and disposed of properly. To avoid the risk of electrocution, the moulded plug must not be left where children might find it and plug it into a supply socket. It must not be used for any other appliance.

Any new plug fitted **MUST** have insulated terminals.

The wires should be connected into the terminals of your plug as follows:

- **Earth**: To the terminal marked E, or coloured GREEN or GREEN/YELLOW.
- **Neutral**: To the terminal marked N, or coloured BLACK or BLUE.
- **Active**: To the terminal marked A, or coloured RED or BROWN.

When wiring the plug make sure that all strands of wire are retained in each terminal.

The flexible mains lead, plug and socket must not be directly exposed to flue products or be in contact with hot surfaces. The lead must not be trapped or pulled taut when the appliance is pushed into position.

An isolation switch shall be provided and mounted near the cooker, in a readily accessible position, in compliance with AS/NZS 3000 and/or AS/NZS 5601 as applicable for the appliance configuration.

Plug in the appliance. Turn on the electricity supply.

If there is an electrical fault carry out the following checks:

Earth Continuity Check

The cooker must be disconnected from the power supply.

Using an multimeter or ohmmeter to check the resistance, test the leads from any of the cooker's earth points (e.g. inside electric box cover) – to the earth pin on the cooker's plug – resistance should be less than 1 Ω. If it is not, check all the earth wires for continuity.

Check that all contacts are clean and tight. Recheck. If the resistance is still greater than 1 Ω there may be a problem, so consult a qualified electrical engineer.

Polarity Check

The cooker must be connected to the power supply. Your meter should be set on 300 V ac scale.

Test at the cooker terminal block:

1. Test leads from A to N. The meter should read about 240 V ac.
2. Test leads from A to E. The meter should read about 240 V ac.
3. Test leads from N to E. The meter should read about 0-15 V ac.

If the readings are different from these values there is an electrical fault. Rectify any fault and repeat the test. If necessary repeat the test at the supply system socket/spur – if the fault also occurs at this stage then there is a house system fault that requires attention by the Electrical Authority.

The customer should be warned **NOT** to use the appliance until this examination has been carried out.

Fig. 8.13

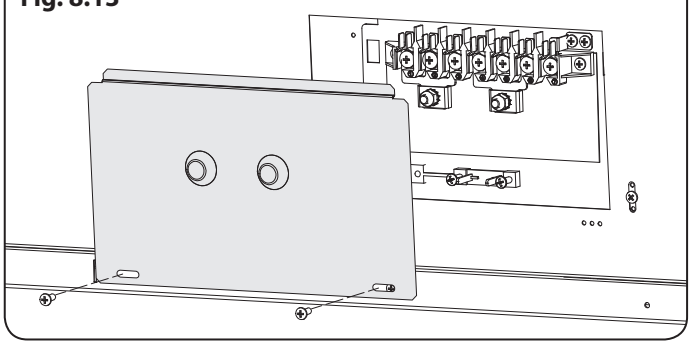

Fig. 8.14

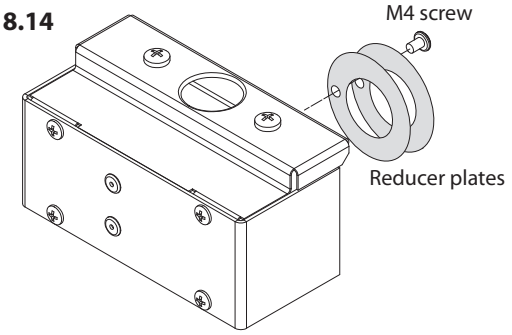

Fig. 8.15

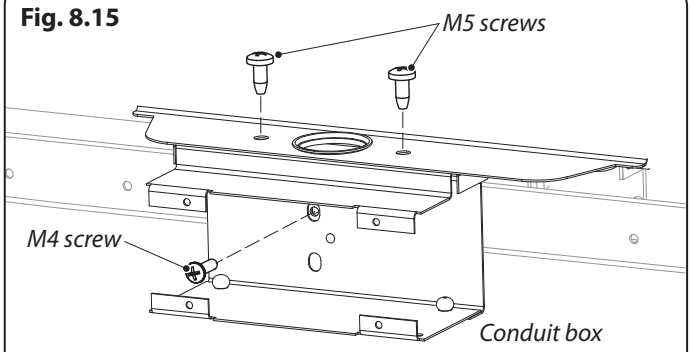

Fig. 8.16

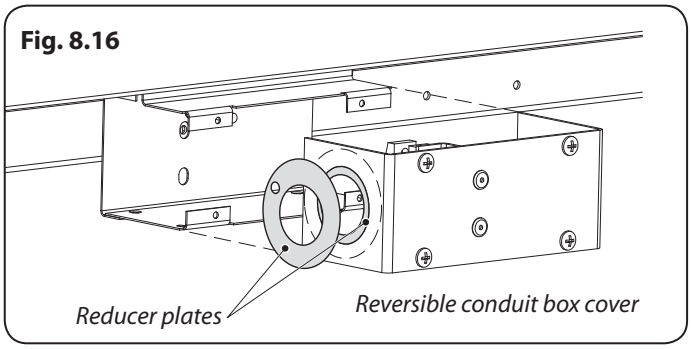

Fig. 8.17

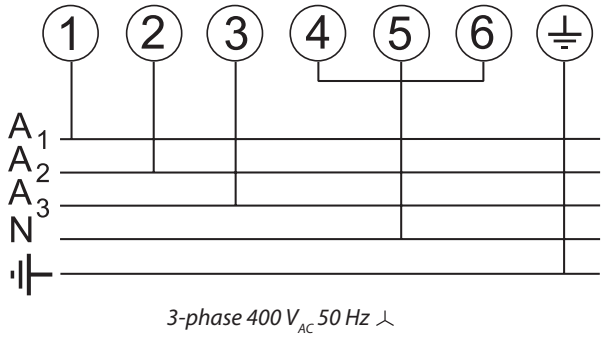

Fixed Wiring

⚠ **Disconnect from the mains supply.**

For connection to fixed wiring, i.e. flexible conduit, Remove the electrical terminal cover on the back panel (**Fig. 8.13**).

Remove the M4 screw securing the reducer plates to the conduit box (**Fig. 8.14**). Fit the conduit box to the cooker using the two M5 screw fittings located at the top of the box and the M4 screw (**Fig. 8.15**).

The conduit box cover is reversible. Fit the reducer plates, if required (**Fig. 8.16**). Feed the cable through the conduit box and secure in place with the cable clamp.

Connect the mains cable to the correct terminals for your electrical supply type (**Fig. 8.17**). Check that the links are correctly fitted and that the terminal screws are tight.

Fit the cover to the conduit box.

Final Checks

Note: The clock must be set before the ovens will work. See 'The Clock' section for instructions on setting the time of day.

Hotplate Check

Check each burner in turn. There is a Flame Supervision Device (FSD) that stops the flow of gas to the burner if the flame goes out. For each burner, turn the control knob to the solid flame symbol. Press in the control knob. This lets gas through to the burner. Keep holding the knob pressed in and press the igniter button or light with a match. Keep holding the control knob pressed in for about 10 seconds.

If, when you let go of the control knob the burner goes out, the safety device has not held in. Wait one minute then try again this time holding the control pressed in for slightly longer.

Grill Check

Turn on the grill control and check that the grill heats up.

Oven Check

Set the clock as described earlier in the instructions, and then turn on the ovens. Check that the ovens start to heat up.

Note: The oven light bulb is not included in the guarantee.

Turn off the ovens.

Final Fitting

Fitting the Handles and Handrail

Remove the 4 mm Allen screws from the doors (**Fig. 8.18**). Fit the door handles and secure using the 4 mm screws.

⚠ **The handles should be above the fixings.**

Remove the 4 mm Allen screws from the top corners of the fascia (**Fig. 8.19**). Fit the handrail in position and secure using the 4 mm screws.

Fitting the Plinth

Fit the inner plinth to the bottom front of the cooker using the 4 screws provided (**Fig. 8.20**).

Fit the outer plinth (2 screws, 1 each end) to the inner plinth (**Fig. 8.21**). Adjust the height of the outer plinth by sliding it up or down via the slotted hole.

Fitting the Splashback

Position the splashback on the rear of the hotplate and secure with the screws supplied.

Customer Care

Installer: Please complete your details in this guide, inform the user how to operate the cooker and hand over the instructions.

Thank you.

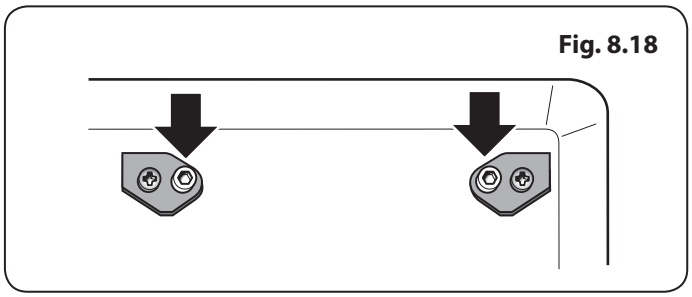
Fig. 8.18

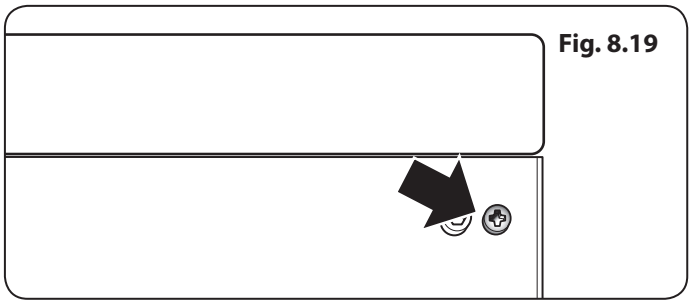
Fig. 8.19

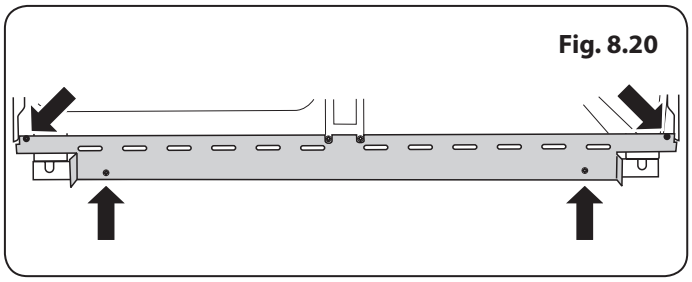
Fig. 8.20

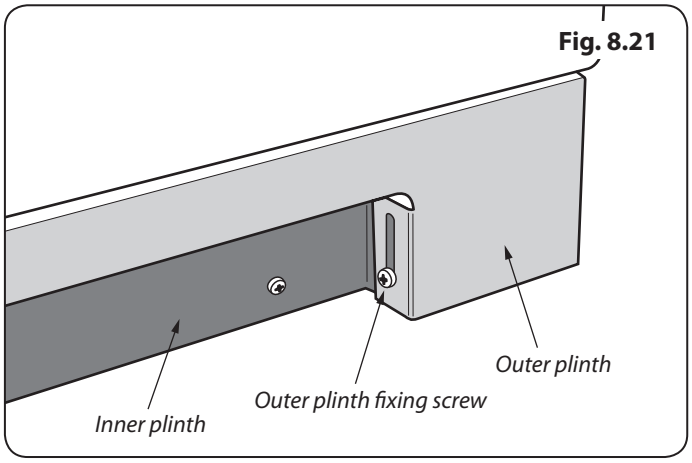

Fig. 8.21

WARNING – SERVICING TO BE CARRIED OUT ONLY BY AN AUTHORISED PERSON
Disconnect from electricity and gas before servicing. Check appliance is safe when you have finished.

9. Conversion to LP Gas

Fig. 9.1

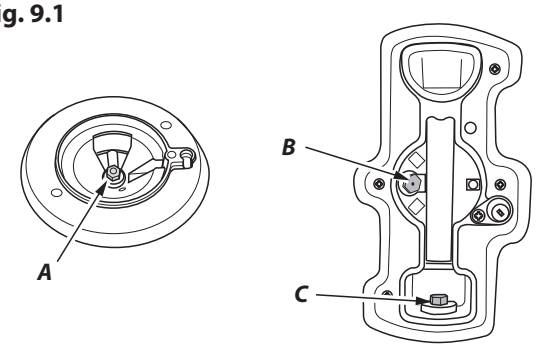

A – Jet, B – Internal injector, C – External injector

Fig. 9.2

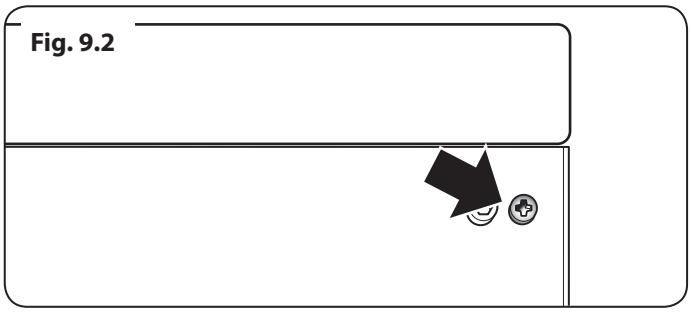

Fig. 9.3

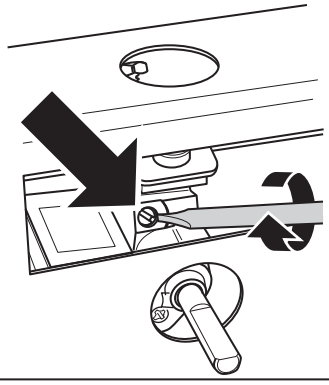

Conversion from Natural Gas (1.0 kPa) to LPG X Propane (2.54 kPa)

A suitably competent person must perform the conversion. After conversion the installation must comply with the relevant regulations and also the local electricity supply company requirements. Read the instructions before converting this appliance.

Failure to convert the appliance correctly could invalidate any warranty or liability claims and lead to prosecution.

When servicing or replacing gas-carrying components disconnect from the gas supply before starting operation. Check the appliance is gas sound after completion.

DO NOT use reconditioned or unauthorised gas controls.

Disconnect from the electricity and gas supply before conversion.

Before electrical reconnection, check that the appliance is electrically safe.

Hotplate

Injectors

Remove the burner caps and heads. Remove the old jets (**Fig. 9.1**). Fit the new jets (see the 'Technical Data' section at the back of this book for the correct jets). Reassemble in reverse order.

Control Panel Removal

Classic – Removing the Control Panel

Remove the handrail. Now remove the 2 cross-headed screws hidden behind the handrail end brackets (**Fig. 9.2**).

Pull off all the control knobs and remove the fixing screws underneath the control panel.

Lift the control panel and pull forwards, taking care not to damage or strain the wiring.

Bypass Screw Adjustment

Turn the bypass screw on each control clockwise to the stop (**Fig. 9.3**). Refit the control panel.

WARNING – SERVICING TO BE CARRIED OUT ONLY BY AN AUTHORISED PERSON
Disconnect from electricity and gas before servicing. Check appliance is safe when you have finished.

Grill

Injector

Lift up the spring retaining the grill holder and slide the jet holder out of the burner venturi (**Fig. 9.4**). Remove the grill jet from the adaptor and fit a new jet; see the 'Technical Data' for the correct jets. Refit the jet holder back into the burner venturi.

Grill Bypass Screw Adjustment

Turn the bypass screw on each control clockwise to the stop. Refit the control panel.

Ovens

Oven Burner Injector

Remove the oven furniture. Remove the securing screw at the right-hand end of the burner assembly (**Fig. 9.5**). The burner is held in place by dimples in the mounting bracket. Slide the burner to the left and lift up, taking care not to disturb the ignition electrode or the flame supervision device electrode positions.

Remove the oven jet from the adaptor and fit the new jet; see the 'Technical Data' for the correct jets.

Reassemble in the reverse order.

Oven Thermostat Bypass

Remove the thermostat bypass screw and fit the new one in each oven; see the 'Technical Data' for the correct screws.

Reassemble the cooker.

Set the Governor

Unscrew the governor's brass top. In the base of the brass top is a plastic snap-in converter device (**Fig. 9.6**). To convert the governor, snap the device out of the top and refit it the other way round. The snap-in converter device is marked to show the gas for which it is set (**Fig. 9.7**).

Make sure the device is secure in the top cap and refit the cap to the governor.

Pressure Testing

The pressure test point is accessible on the inlet pipe at the rear. Remove the test nipple screw and fit a pressure gauge to the test point. Turn on and light two of the hotplate burners.

For Propane X cookers the pressure should be 2.54 kPa.

⚠ **Check the appliance is gas sound.**

⚠ **Check operation of all the burners.**

Affix Label

Stick the appropriate gas label over the natural gas part of the appliance data label.

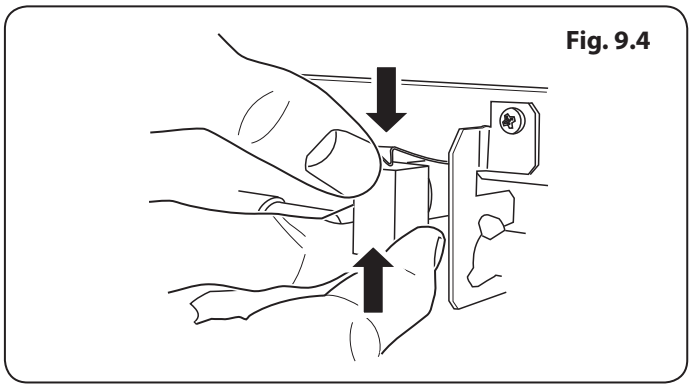

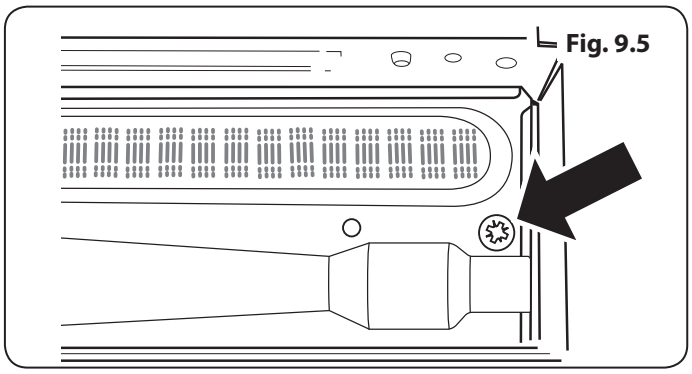

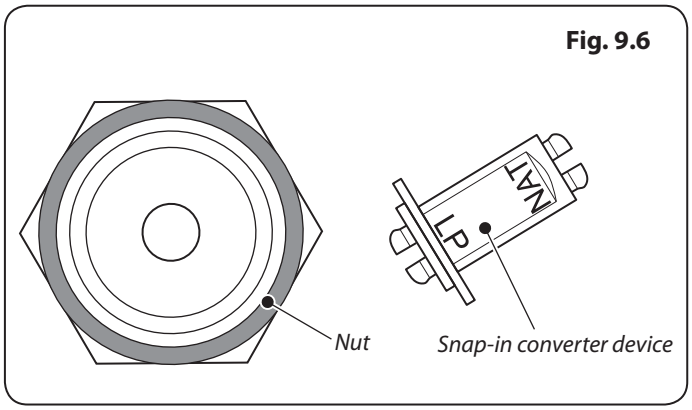

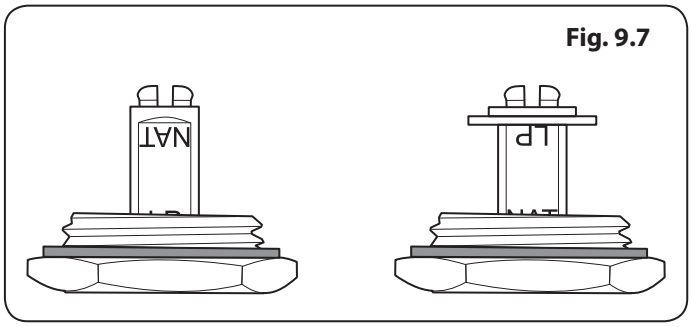

WARNING – SERVICING TO BE CARRIED OUT ONLY BY AN AUTHORISED PERSON
Disconnect from electricity before servicing. Check appliance is safe when you have finished.

10. Servicing

Fig. 10.1

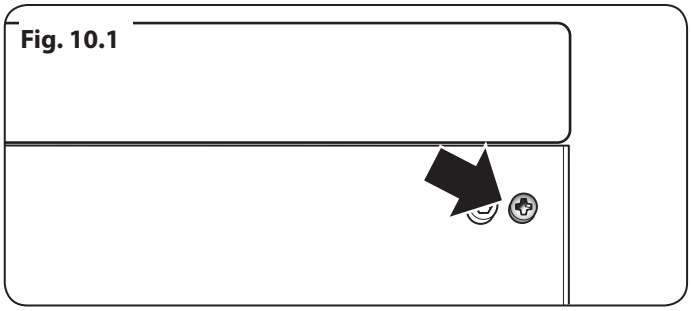

Fig. 10.2

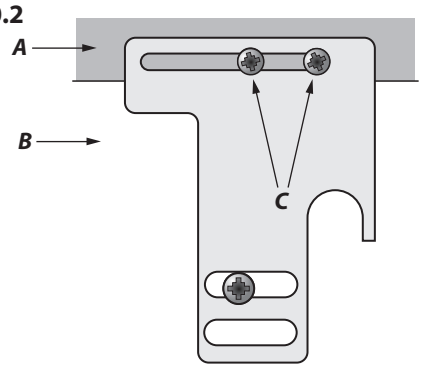

A – Flue grill, B – Cooker backsheet, C – Earthing/fixing screws

Fig. 10.3

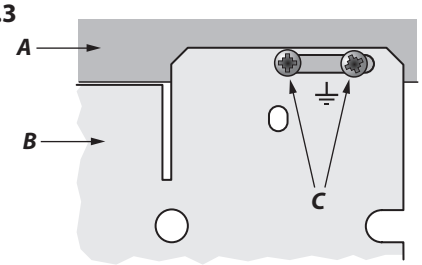

A – Flue grill, B – Cooker backsheet, C – Earthing/fixing screws

BEFORE SERVICING ANY GAS CARRYING COMPONENTS TURN OFF THE GAS SUPPLY

Check the appliance is gas sound after completion of service. When checking for gas leaks DO NOT use washing up liquid – this can corrode. Use a product specifically manufactured for leak detection.

DO NOT use reconditioned or unauthorised gas controls.

Disconnect from the electricity supply before servicing, particularly before removing any of the following: control panel, side panels, hotplate tray or any electrical components or covers.

Before electrical reconnection, check that the appliance is electrically safe.

Panels

1.1 To Remove the Control Panel

DISCONNECT FROM THE ELECTRICITY SUPPLY.

Classic – Removing the Control Panel

Remove the handrail. Now remove the 2 cross-headed screws hidden behind the handrail end brackets **(Fig. 10.1)**.

Pull off all the control knobs and remove the fixing screws underneath the control panel.

Lift the control panel and pull forwards, taking care not to damage or strain the wiring.

Toledo – Removing the Control Panel

Pull off all the control knobs and remove the fixing screws underneath the control panel.

Slide the control panel to the right and then pull forwards, taking care not to damage or strain the wiring.

1.2 To Remove the Side Panels

DISCONNECT FROM THE ELECTRICITY SUPPLY.

Remove the control panel (see 1). Pull the cooker forward. Remove the 4 retaining screws for each panel (1 at the front base, 1 on the top and 2 at the rear).

Reassemble in the reverse order.

Hotplate

2.1 To Remove the Hotplate

Pull the cooker forward to gain access to the rear.

Left-hand tray

From the rear remove the screws securing the flue grill to the hotplate tray. Remove pan supports, burner heads and caps. Remove the 4 screws and washers holding the hotplate tray to the frame. Raise the front of the hotplate then withdraw.

Right-hand tray

From the rear remove the screws securing the flue grill to the hotplate tray. If the left-hand hotplate has not been removed, slacken the screws holding the left-hand tray. Remove the pan support, burner head, caps and trim rings. Remove the screws holding the wok burner to the hotplate. Remove the 2 screws and washers holding the right-hand tray to the frame.

Press the wok burner down slightly and, taking care not to damage the wok burner electrode, slide the tray about 30 mm to right to clear the locating brackets on the right-hand side and withdraw the hotplate.

Reassemble in reverse order. When replacing the right-hand hotplate take care not to damage the ignition electrode of the wok burner.

It is important that the rear fixing screws are refitted as they from part of the cooker earthing.

On some models there is a separate plate **(Fig. 10.2)**. On others it is a tag on the cooker backsheet **(Fig. 10.3)**.

It is important that the tag is on the outside and that both fixing screws are fitted.

Check for correct burner operation.

2.2 To Replace the Hotplate Control Taps

DISCONNECT FROM THE ELECTRICITY SUPPLY.

⚠ **BEFORE SERVICING ANY GAS CARRYING COMPONENTS, TURN OFF THE GAS SUPPLY.**

Remove the control panel and hotplate (see 1.1 & 2.1). Unplug the FSD lead from the rear of the tap. Undo the compression fitting at the rear of the tap and remove the fixings that secure the tap to the gas rail. Disconnect the ignition switch wiring.

Remove the tap. Remove and discard the gasket seal. Fit the new gasket seal to the replacement tap. Reassemble in reverse order. Check that the appliance is gas sound. Verify the hotplate ignition.

2.3 To Change a Hotplate Burner Injector

Remove the burner cap and head. Remove the old injector.

Fit the new injector. Reassemble in the reverse order. Check the appliance is gas sound.

2.4 To Replace a Hotplate Burner Electrode

DISCONNECT FROM THE ELECTRICITY SUPPLY.

Lift off pan supports and remove the burner cap. Remove the screw holding the electrode. Pull the electrode vertically up sufficiently to grip the lead between thumb and forefinger.

Pull off the electrode, but keep hold of the lead. Fit the new electrode to the lead. Fix the electrode in the burner with screw. Replace the burner cap.

Check the burner ignition. Replace the pan supports.

2.5 To Replace a Hotplate Burner

DISCONNECT FROM THE ELECTRICITY SUPPLY.

Remove the hotplate tray (see 2.1). The burners (except the right-hand wok burner) are mounted on support struts. For these burners, disconnect the burner feed pipes at the burner. Remove the screws at the front and rear holding the support struts. Lift the strut and burners clear. The burners are fixed to the support struts with 2 screws. Remove the appropriate burner and fit the new one.

Reassemble in reverse order. Check that the burner operation is satisfactory.

Right-hand Wok Burner

Disconnect the burner feed pipes at the burner.

Fit the new one and reassemble in reverse order. Check that the burner operation is satisfactory.

2.6 To Change a Hotplate Burner Thermocouple

DISCONNECT FROM THE ELECTRICITY SUPPLY.

Remove the control panel and hotplate (see 1.1 & 2.1).

Unplug the FSD lead from the rear of the tap.

The thermocouple sits in a hole that has a slot at one side. Ensure that the thermocouple is cool. Turn the thermocouple so that the earth lead (no sleeve) is in line with the slot. Lift the thermocouple clear of the hole.

Reassemble in reverse order.

Controls

3.1. To Replace the Ignition or Light Switch

DISCONNECT FROM THE ELECTRICITY SUPPLY.

Remove the control panel (see 1.1).

Note: The old switch may be destroyed during removal. Remove the old switch from its bezel by gripping the switch body behind the control panel and twisting sharply. Remove the switch bezel by folding back the locking wings and pushing forward.

To fit the new bezel to the control panel: first line up the raised key on its body with the cut-out in the control panel and push it in from the front.

Assemble the new switch to the bezel by lining up the key sections and pushing home. Fit the new button by pushing in from the front.

Replace the control panel in the reverse order and test for correct operation.

3.2 To Replace the Clock

DISCONNECT FROM THE ELECTRICITY SUPPLY.

Remove the control panel (see 1.1). Pull off the timer control buttons.

Undo the timer fixing screws and remove the timer/mounting bracket assembly from the control panel.

Remove the timer from its mounting bracket by depressing the plastic lugs on the timer case, and at the same time pulling the unit forward.

Reassemble in the reverse order. When replacing the leads, refer to the wiring diagram. Check the operation of the timer.

3.3 To Change the Ignition Generator

DISCONNECT FROM THE ELECTRICITY SUPPLY.

Pull the cooker forwards to gain access to the cover box at the rear of the cooker. Remove the screws securing the cover and lift clear. Noting the position of the leads, pull off all the leads to the generator. Slacken the 2 screws holding generator to cooker and remove the generator.

Fit the new generator to the cooker and replace the leads. Refer to the wiring diagram and reassemble in the reverse order. Check the ignition performance.

WARNING – SERVICING TO BE CARRIED OUT ONLY BY AN AUTHORISED PERSON
Disconnect from electricity before servicing. Check appliance is safe when you have finished.

Grill

BEFORE SERVICING ANY GAS CARRYING COMPONENTS, TURN OFF THE GAS SUPPLY.

4.1 To Change the Grill Control Tap

Disconnect from the electricity supply.

Remove the control panel (see 1.1). Lift up the right-hand hotplate tray front (see 2.1). Undo the gas connection to rear of valve and remove the screw(s) securing tap to gas rail. Remove old tap, discard the old gasket/seal. Fit the new gasket/seal to the new tap.

Reassemble in the reverse order. Check the tap is adjusted for the correct gas. Check the appliance is gas sound.

4.2 To Change the Grill Injector

Disconnect from the electricity supply.

Remove the control panel (see 1.1).

Lift up the spring clip retaining the grill injector holder and slide the injector holder out of the burner venturi **(Fig. 10.5)**. Remove the grill jet from adaptor and fit a new jet (see the ratings table for correct jet). Put the injector holder back in the burner venturi.

4.3 To Change the Grill Burner

Disconnect from the electricity supply.

Remove the grill injector (see 4.2).

Remove the 2 screws holding the front shield and remove the shield. Turn the grill venturi clockwise to clear the front cross-member, lift up and remove
(Fig. 10.4).

For models with ignition disconnect the electrode lead and remove the screw holding the plate around the grill electrode. Support the grill burner from below and remove the 2 screws (under the foil wrap) securing grill burner to the top of grill chamber. Remove the grill burner.

Reassemble in reverse order taking care not to damage the grill electrode (where fitted).

4.4 To Change the Grill Electrode

Disconnect from the electricity supply.

Remove the grill burner (see 4.3). Withdraw the electrode and pull off the electrode lead. Fit the lead to the new electrode.

Reassemble in reverse order and check ignition is satisfactory.

Fig. 10.4

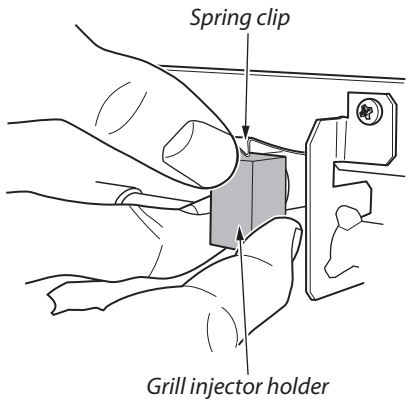

Fig. 10.5

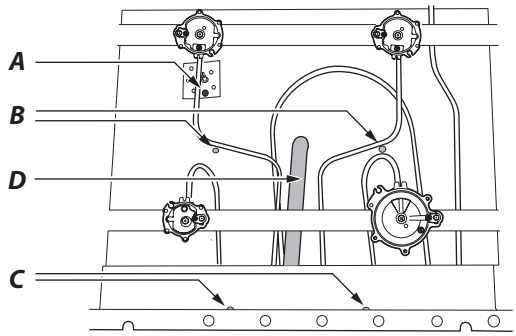

A – Grill electrode plate fixing screw, B – Position of grill burner fixing screws, C – Front shield fixing screws, D – grill venturi

WARNING – SERVICING TO BE CARRIED OUT ONLY BY AN AUTHORISED PERSON
Disconnect from electricity before servicing. Check appliance is safe when you have finished.

Fig. 10.6

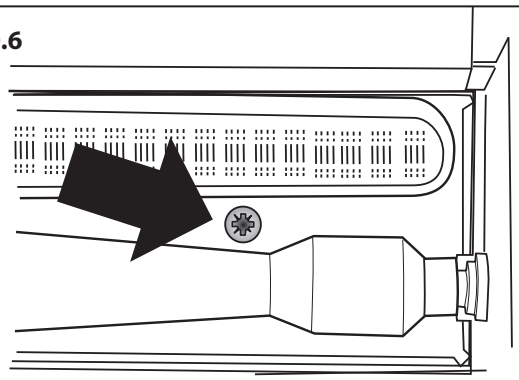

Fig. 10.7

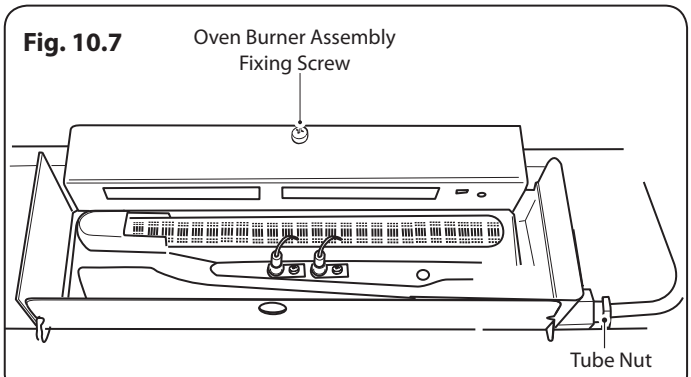

Fig. 10.8

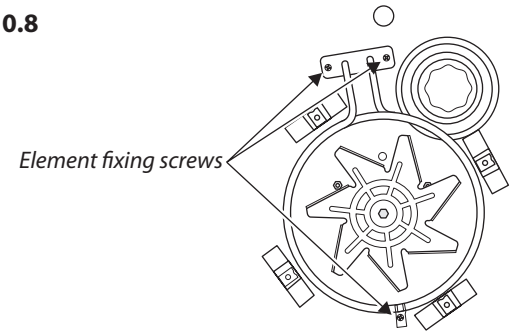

Ovens

5.1 To Remove the Tall Oven Inner Back

Open the tall oven door and remove the 2 screws and washers securing the inner back to the back of the oven. Carefully lift away the inner back.

Reassemble in reverse order.

Check the door for correct operation.

5.2 To Remove an Oven Thermostat

Disconnect from the electricity supply.

Remove the right-hand hotplate tray (see 2.1); for the left-hand oven remove the left-hand side panel (see 1.2). Open the appropriate oven door.

Main Oven

Unclip the thermostat phial from the clips at the front of the oven roof. Disconnect tubing nut at rear of thermostat and remove the screw(s) securing the thermostat to the gas rail. Remove thermostat and gasket/seal. When fitting replacement thermostat use the new gasket/seal supplied.

Make sure that the capillary is clipped to the bracket at the front of the oven roof.

Reassemble in the reverse order. Check the appliance is gas sound. Check the operation of the thermostat.

Tall Oven

Remove the tall oven inner back (see 5.1). Unclip the thermostat phial from the clips in the oven back.

Feed the thermostat capillary out of the oven. Disconnect the wiring from the thermostat. Remove the 2 screws holding the thermostat to the mounting panel. Fit the new thermostat and reassemble in the reverse order. Make sure the phial is clipped at the oven back with the phial centrally positioned between the clips.

Reassemble in reverse order. Check appliance is electrically and gas sound. Check operation of thermostat.

5.3 To Remove the Main Oven Burner

Open the oven door and remove the oven shelves. Remove the securing screw at the right-hand end **(Fig. 10.6)**. The burner is held in place by dimples in the mounting bracket. Slide the burner to the left and lift up, taking care not to disturb or damage the 2 electrodes.

Reassemble in reverse order. Check the 2 electrodes have not been disturbed.

5.4 To Change the Main Oven Burner Assembly

Open the oven door. Disconnect the tube nut and tubing. Remove the screw holding the oven burner assembly and withdraw complete assembly **(Fig. 10.7)**. Remove the oven burner.

Fit the oven burner to new assembly. Replace the complete assembly in the oven. Reconnect the tube and secure with the tube nut.

Check the appliance is gas sound. Check the flame safeguard device operation

WARNING – SERVICING TO BE CARRIED OUT ONLY BY AN AUTHORISED PERSON
Disconnect from electricity before servicing. Check appliance is safe when you have finished.

5.5 To Change the Main Oven Burner Injector

Remove the main oven burner (see 5.3). The injector is now accessible. Remove the old jet and fit the new one.

Reassemble in the reverse order. Check that the flame safeguard device probe has not been disturbed.

5.6 To Change the Oven Programming Flame Safeguard Unit

DISCONNECT FROM THE ELECTRICITY SUPPLY.

Pull the cooker forwards to gain access to the cover box at the rear of the cooker. See *'Moving Your Cooker'* in the Installation section.

Remove the screws securing the cover and lift clear. Noting their positions, pull off all the leads to the PFS control unit. Slacken the 3 screws holding the control unit to the cooker and remove.

Fit the new PFS unit to the cooker and replace the leads. Refer to the wiring diagram and reassemble in the reverse order. Check the performance.

5.7 To Change the Main Oven Solenoid

DISCONNECT FROM THE ELECTRICITY SUPPLY.

Move the cooker forward to gain access to the rear. See *'Moving Your Cooker'* in the installation section.

Remove the screws securing the cover and lift clear. Disconnect the solenoid leads and remove the earth lead from the earth screw. Unclip the wires from the cable ties.

Disconnect the pipe tube nuts to the solenoid unit. Unscrew the locking nut from the end connector and the remove solenoid unit. Fit the new unit to mounting bracket and fix in place with locking nut. Refit the tube nut connections.

Replace the leads (refer to the wiring diagram). Replace the wires in cable ties. Check the appliance is gas sound. Refit the cover box. Check for the correct operation of the solenoids.

5.8 To Change the Main Oven Electrode

DISCONNECT FROM THE ELECTRICITY SUPPLY.

Remove the main oven burner (see 5.3). Remove the screw and nut securing the electrode to the burner. Pull the lead from back of electrode and fit to the new electrode. Fit the new electrode to the burner.

Reassemble in the reverse order. Check the ignition.

5.9 To Change the Tall Oven Fan

DISCONNECT FROM ELECTRICITY SUPPLY.

Pull the cooker forward to gain access to the rear. Remove the screws securing the electric cover to the back sheet and remove the cover.

Disconnect the 3 teminals connected to the fan, noting their positions. Remove the tall oven inner back (see 5.1).

Hold the fan blade and remove the centre nut (left-hand thread) brass washers (2 off), fan blade and circlip. Unscrew the fan retaining nuts and washers (3 off each) and lift the fan away from the rear of the cooker. Fit the new fan and reassemble in reverse order.

Check the operation of the oven.

5.10 To Remove the Tall Oven Element

DISCONNECT FROM ELECTRICITY SUPPLY.

Remove the tall oven inner back (see 5.1).

Remove 2 screws from the top of the element and 1 from the bottom of the element inside the oven **(Fig. 10.8)**. Carefully lift the element out, disconnect the terminals connected to the element (noting their positions).

If it is not possible to disconnect the leads in this way, pull cooker forward to gain access to the rear, remove screws securing the electric cover to the back sheet and remove cover and disconnect the terminals from the rear.

Fit new element, and reassemble in reverse order. Check operation of oven.

Fig. 10.9

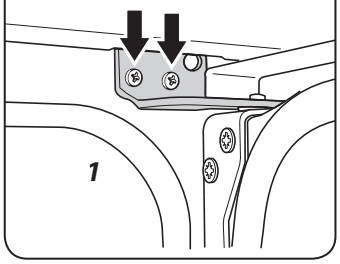

Fig. 10.10

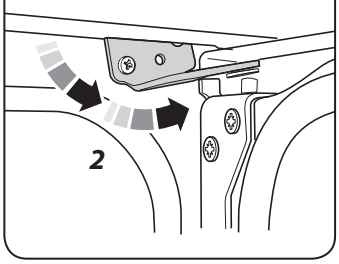

Fig. 10.11

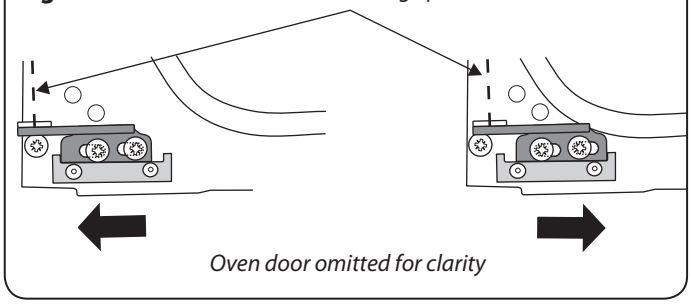

Fig. 10.12

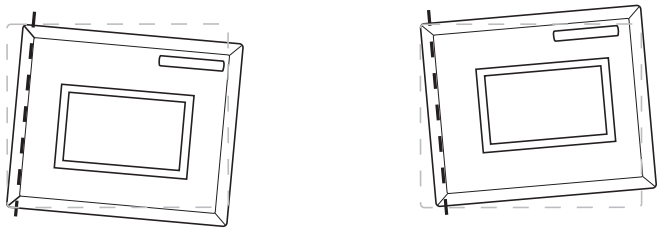

Effect of hinge adjustment – exagerrated for clarity

Fig. 10.13

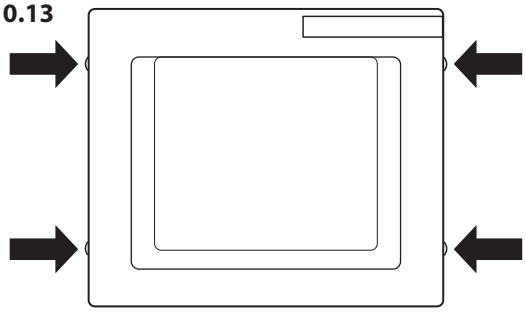

Fig. 10.14

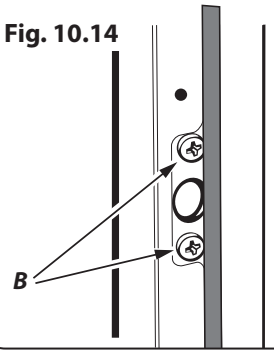

Fig. 10.15

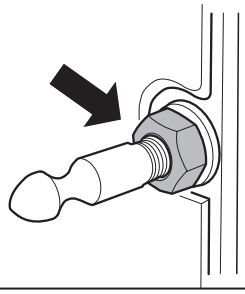

Doors

6.1 To Remove the Grill Door

Remove the left-hand side panel (see 1.2). Remove the plinth (4 screws) and the central vertical cover (5 screws). Remove the 2 countersunk screws (1 each side) securing the grill hinge arms to the front of the grill chamber.

Note: The arms are spring tensioned. Carefully remove the grill door. Retain the gaskets.

Reassemble in the reverse order, making sure that the gasket is fitted between the hinge arm and the front of the grill chamber.

6.2 To Replace the Main Oven Door

Open the oven door. Support the door and loosen the 2 screws securing the upper hinge and gasket to the cooker front **(Fig. 10.9)**.

The door is heavy, so take care.

Support the door and remove the screw nearest the hinge pin **(Fig. 10.10)**. Swing the hinge up and away from the door hinge pin. Lift the door away from the lower hinge and remove.

Reassemble in reverse order.

6.3 To Adjust the Main Oven Door Angle

The bottom hinge of the main oven door can be adjusted to alter the angle of the door **(Fig. 10.11)**. Loosen the bottom hinge fixing screws and use the notch and a flat bladed screwdriver to move the position of the hinge to set the hinge position
(Fig. 10.12).

Retighten the hinge screws.

6.4 To Replace the Main Oven Door Outer Panel

Move the cooker forwards to gain access to the sides.

Open the main oven door slightly and remove the 4 front panel fixing screws from the door sides (2 each side), **(Fig. 10.13)**. Carefully lift off the outer door panel.

Remove the door handle from the panel by unscrewing the 2 retaining nuts.

Fit the door handle to the new panel.

Fit the panel to the door. Reassemble in reverse order.

6.5 To Change the Main Oven Door Latch

Remove the main oven door outer panel (see 6.4). Remove screws 'B', which hold the latch assembly to the inner door panel **(Fig. 10.14)**. Fit the new catch and reassemble in reverse order. Check the door operation.

6.6 To Adjust the Main Oven Door Catch Keep

Open the main oven door, slacken off the locknut at the base of the keep, and screw in or out as required until the required fit is obtained. Retighten the locking nut
(Fig. 10.15).

6.7 To Remove the Tall Oven Door

Open the tall oven door. Supporting the door, remove the 2 screws securing the upper hinge and packing to the cooker front. Remove the door from the lower hinge by lifting slightly and moving outwards.

Reassemble in reverse order.

6.8 To Replace the Tall Oven Door Outer Panel

Remove the tall oven door (see 6.7). Lay the door face down on a suitable surface and remove the 2 screws from bottom edge of door and the 2 screws from the inside face of the door.

Remove the outer door panel. Remove the door handle by unscrewing the 2 screws.

Remove the 2 cross-headed screws holding the door handle fixing bracket to the door panel. Fit the door handle bracket and the door handle to the new panel.

Fit the panel to the door and reassemble in reverse order.

6.9 To Replace the Tall Oven Door Magnetic Latch

Remove the control panel (see 1.1). Remove the plinth (3 screws) and the central vertical cover (5 screws). Lever the retaining clip off the magnet unit.

Fit the new unit and retaining clip, and reassemble in reverse order. Check the door operation.

6.10 To Change an Oven Door Seal

Open the oven door. The seal is held in place by small hooks on the rear face. At the corner, pull the seal diagonally away from the door centre until that hook is released **(Fig. 10.16)**. Proceed to the next hook and release it in a similar way, and so on. Use force if the hooks are stiff, as the old seal will be discarded.

When fitting the new seal, position the seal join at the bottom. Hook the new seal in one of the corner holes of the door, and proceed round the door, snapping in each hook in turn.

6.11 Oven Door Glass

The glass on the oven doors is not replaceable.

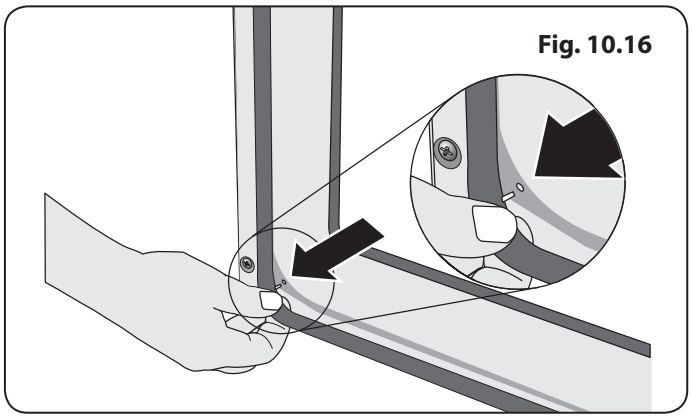

Fig. 10.16

11. Circuit Diagram

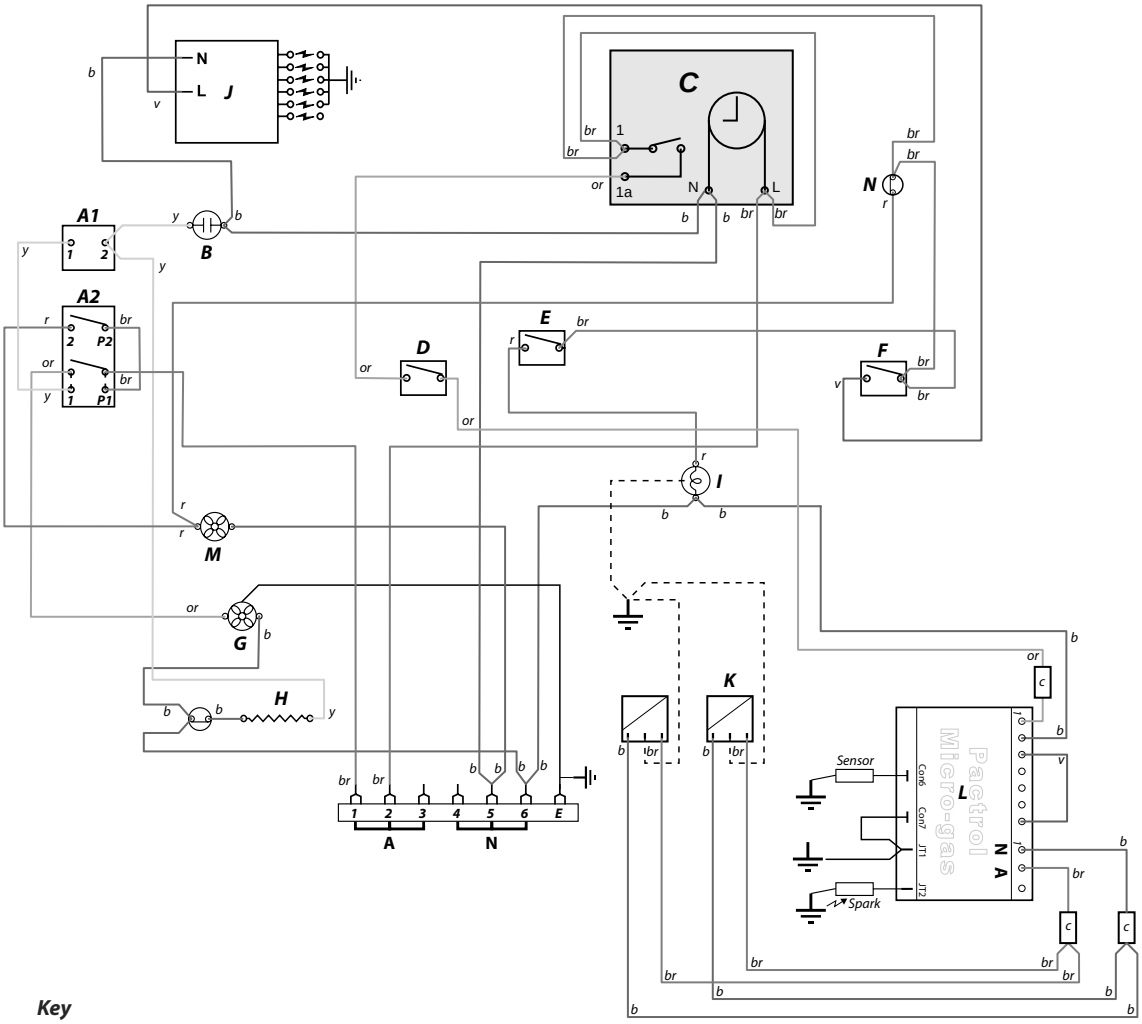

Key

Key

The connections shown in the circuit diagram are for single-phase. The ratings are for 230 V 50 Hz.

Code	Description
A1	Right-hand oven thermostat
A2	Right-hand oven control switch
B	Right-hand oven neon
C	Clock
D	Left-hand oven thermostat
E	Oven light switch
F	Ignition switch
G	Right-hand oven fan
H	Right-hand oven element
I	Oven light bulb
J	Spark generator
K	Solenoid assembly
L	Flame safeguard unit
M	Cooling fan
N	Thermal switch

Code	Colour
b	Blue
br	Brown
bk	Black
or	Orange
r	Red
v	Violet
w	White
y	Yellow
g/y	Green/yellow
gr	Grey

12. Technical Data

This cooker is designed for use on Natural Gas, although a conversion for LP (LPG X Propane (2.54 kPa)) gas is packed with the cooker.

INSTALLER: Please leave these instructions with the user.

DATA BADGE LOCATION: Cooker back, serial number repeater badge below oven door opening.

COUNTRY OF DESTINATION: Australia.

Connections

Gas (Rp ½ at rear right-hand side)		**Electric**
Natural gas	1 kPa	230 V 50 Hz
Propane	2.75 kPa	

See the appliance badge for test pressures.

Dimensions

Overall height	minimum 905 mm	maximum 930 mm
Overall width	900 mm	
Overall depth	608 mm excluding handles; 670 mm including handles	
Minimum space above the hotplate	650 mm	

Refer to 'Positioning the Cooker'.

Ratings

Hotplate	**Bypass Screw**	**Natural Gas 1.0 kPa**		**LP Gas 2.54 kPa**	
			Injector		**Injector**
Wok burner	55*	15.2 MJh-1	internal 88	15.0 MJh-1	internal 57
			external 168		external 98
Large burner	41*	12.3 MJh-1	165	12.0 MJh-1	89
Medium burners	33*	6.2 MJh-1	115	6.2 MJh-1	67
Small burner	25*	3.7 MJh-1	92	3.3 MJh-1	45
Grill	77*	10 MJh-1	280	10 MJh-1	100

* The valve is fitted with an adjustable bypass screw. The cooker is supplied with the bypass screw set for Natural gas. For LPG conversion the bypass screw must be screwed all the way down.

	Bypass Screw		**Natural Gas 1.0 kPa**		**LP Gas 2.54 kPa**	
	Natural Gas 1.0 kPa	LP Gas 2.54 kPa		Injector		Injector
Ovens	70	79	9.5 MJh-1	150	9.5 MJh-1	88

Maximum total electrical load at 230 V (approximate total including oven lights, oven fan, etc.): 2.6 kW.

Clarence Street, Royal Leamington Spa,
Warwickshire, CV31 2AD, England.
Tel: +44 (0) 800 804 6261 | +44 (0) 370 789 5107
E-mail: consumers@falconappliances.co.uk