Thank you for your purchase!

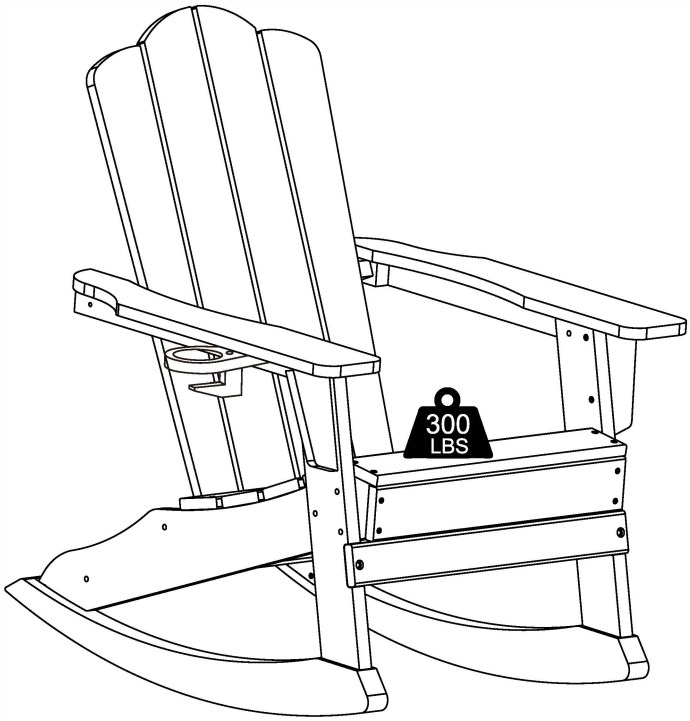

Indoor/Outdoor Poly Resin
Adirondack Rocking Chair
With Cup Holder

ASSEMBLY INSTRUCTIONS

Before You Begin:
Please identify all component parts and hardware pieces required before you begin. Carefully remove all of the components from the packaging and set aside for assembly. Assemble on a soft surface to prevent scratching during assembly.

Caution:
Tighten all components securely before use. Failure to do so may result in personal injury. DO NOT use any sharp objects to open plastic wrapped components as damage to product or components may result.

Warning:

CHOKING HAZARD - Small Parts. Adult Assembly Required.

DO NOT ALLOW CHILDREN TO CLIMB ON FURNITURE

Serious or fatal injuries can occur from furniture tipping over. You must install Tipping Restraint Hardware (where included) to help prevent the unit from tipping and causing accidental injury, instability, death or damage. The tipping restraint is intended only as a safety measure, it is not a substitute for proper adult supervision.

To help prevent furniture from tipping over it must be permanently attached to the wall. Anti-Tip Safety Wall Straps suitable for the unit weight and wall materials (if not included) should be purchased and installed.

Customer Service Email: CustomerExperience@belnick.com | Phone: 866-552-2810

Congratulations!

You just purchased a piece of happiness. At Belnick, we believe you can transform your spaces into the most inspired places with furnishings that are the perfect combination of form, function and style. As original innovators of online furniture retail, we offer the best selection of popular, contemporary styles at cool, comfortable prices. And, with decades of proven shipping and packaging expertise, our Extended Quality Checklist ensures a rewarding, hassle-free experience time and time again. It's just what you need to bring your vision to life.

Thank you & Enjoy!!

your friends at Belnick

LIKE IT!

Share it on social & Tell a friend! #Spaces2Places

LOVE IT!

Write an online product review where purchased

NOT SURE?

Let us help! Contact our customer support.

Have a question, concern or simply need a hand? Your satisfaction is our top priority. Contact us at 866-552-2810 or customerexperience@belnick.com. We're here to help!

Browse Our Branded Collections

There's something for everyone inside our family of brands.

FLASH FURNITURE®

MASADA RUGS

MERRICK | LANE

Emma+Oliver

TAYLOR + LOGAN

BlackArc®

Visit www.belnick.com/brands or scan this code to go even faster!

BELNICK

ONE VISION. ENDLESS POSSIBILITIES.

We pride ourselves on providing an excellent customer experience starting right here with your package and instructions. Everything you need should be right where you need it, so you can get to enjoying your new item ASAP. But despite our best efforts, sometimes "slips happen." If you need any support, from replacement parts to recommendations, please reach out to our wonderful customer support team at 866-552-2810 or customerexperience@belnick.com. We're here to help!

EVERY BELNICK PRODUCT

Quality & Durability Tested

Packaged with Care

Shipped from our U.S. Facility

Designed for Easy Assembly

Ethically Sourced

Please visit https://www.belnick.com/warranty for complete warranty information.

Read this manual before using this product. Failure to follow the instructions and safety precautions in this manual can result in serious injury or death. Keep this manual in a safe location for future reference.

A	Back	1pc	1	Hex Bolt M6x30mm	3pcs
B	Seat	1pc	2	Hex Bolt M6x40mm	4pcs
C	Right Front Leg	1pc	3	Hex Bolt M6x60mm	8pcs
D	Left Front Leg	1pc	4	Hex Bolt M6x70mm	2pcs
E	Right Arm	1pc	5	Hex Bolt M6.3x80mm	4pcs
F	Left Arm	1pc	6	Bolt M4.2x35mm	4pcs
G	Front Support Pole	1pc	7	Nut	8pcs
H	Left Runner	1pc	8	Allen Wrench 5#	1pc
I	Right Runner	1pc	9	Wrench	1pc
J	Back Support Pole	1pc	10	Phillips Screwdriver	1pc
K	Cup Holder	1pc			

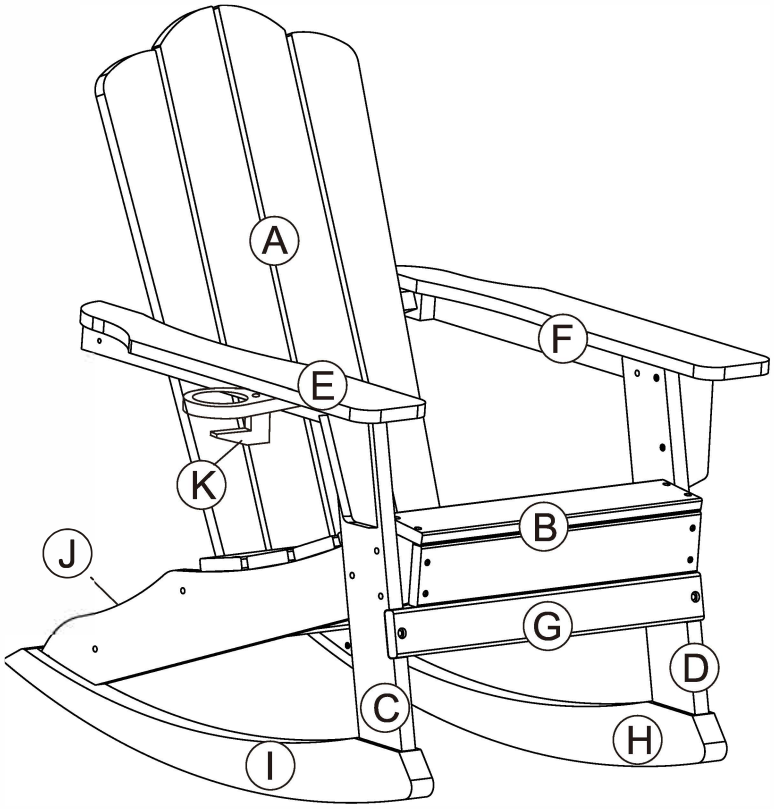

STEP:1

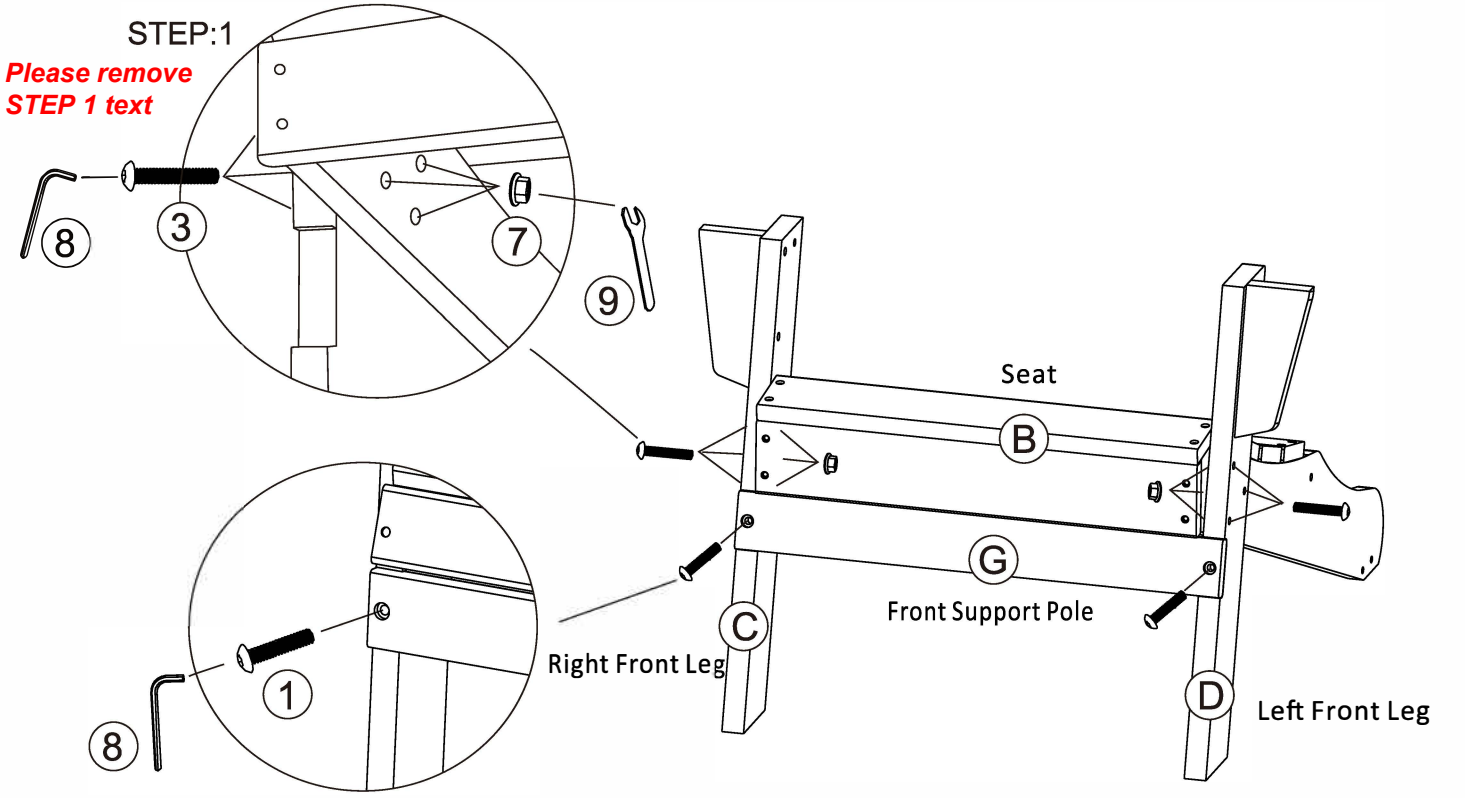
STEP:1
Please remove
STEP 1 text
8
3
7
9
Seat
B
G
Front Support Pole
C
Right Front Leg
D
Left Front Leg
1
8

STEP:2

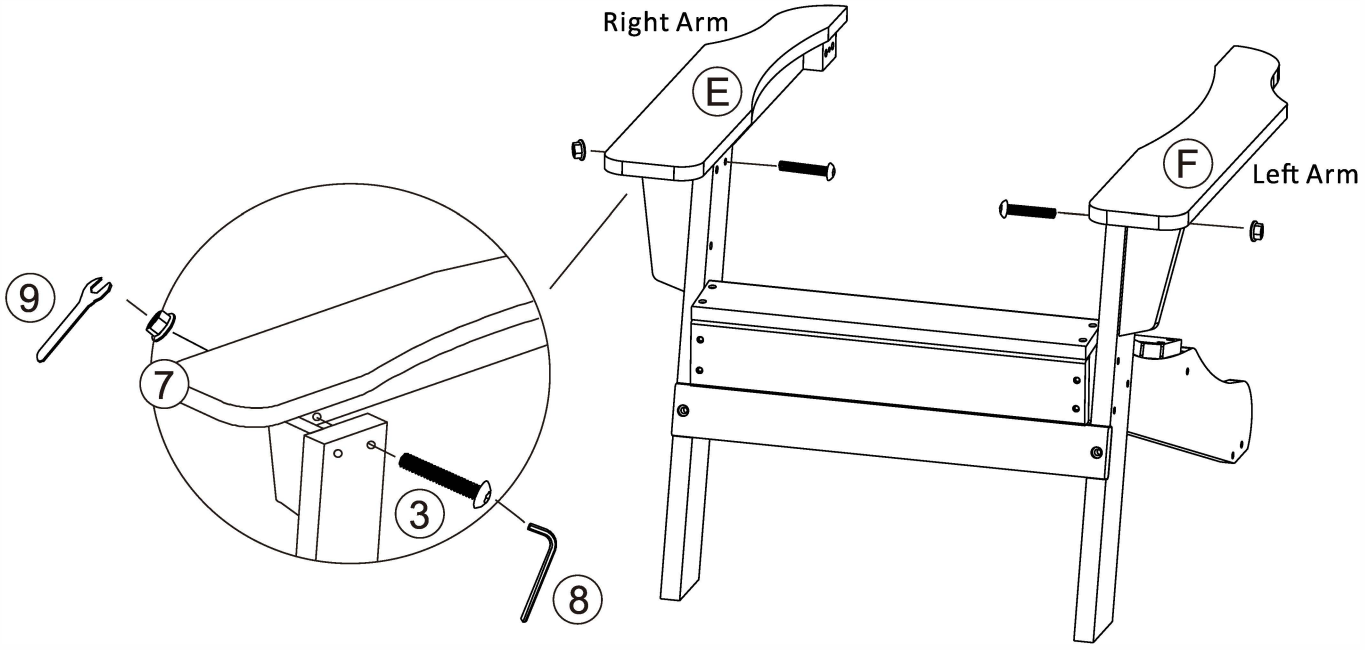
Right Arm
E
F
Left Arm
9
7
3
8

STEP:3

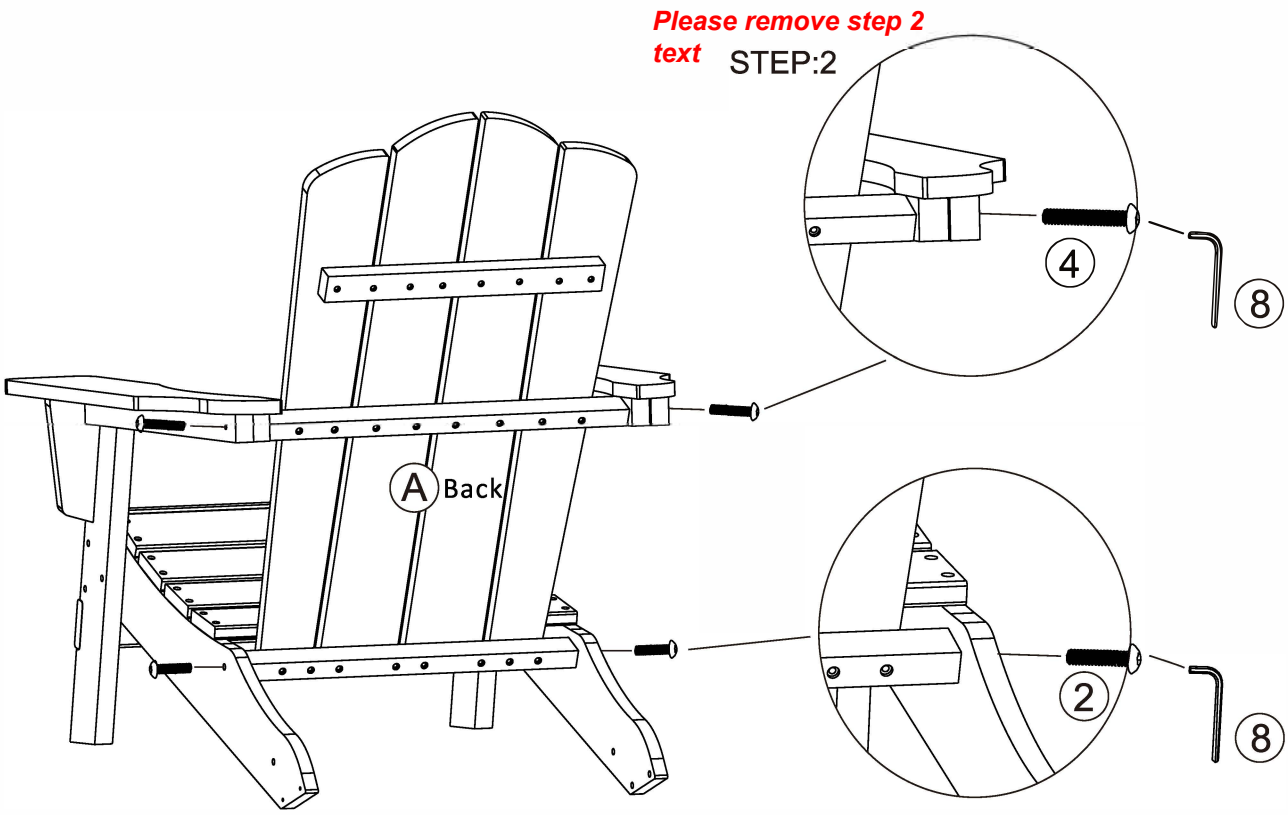

STEP:4

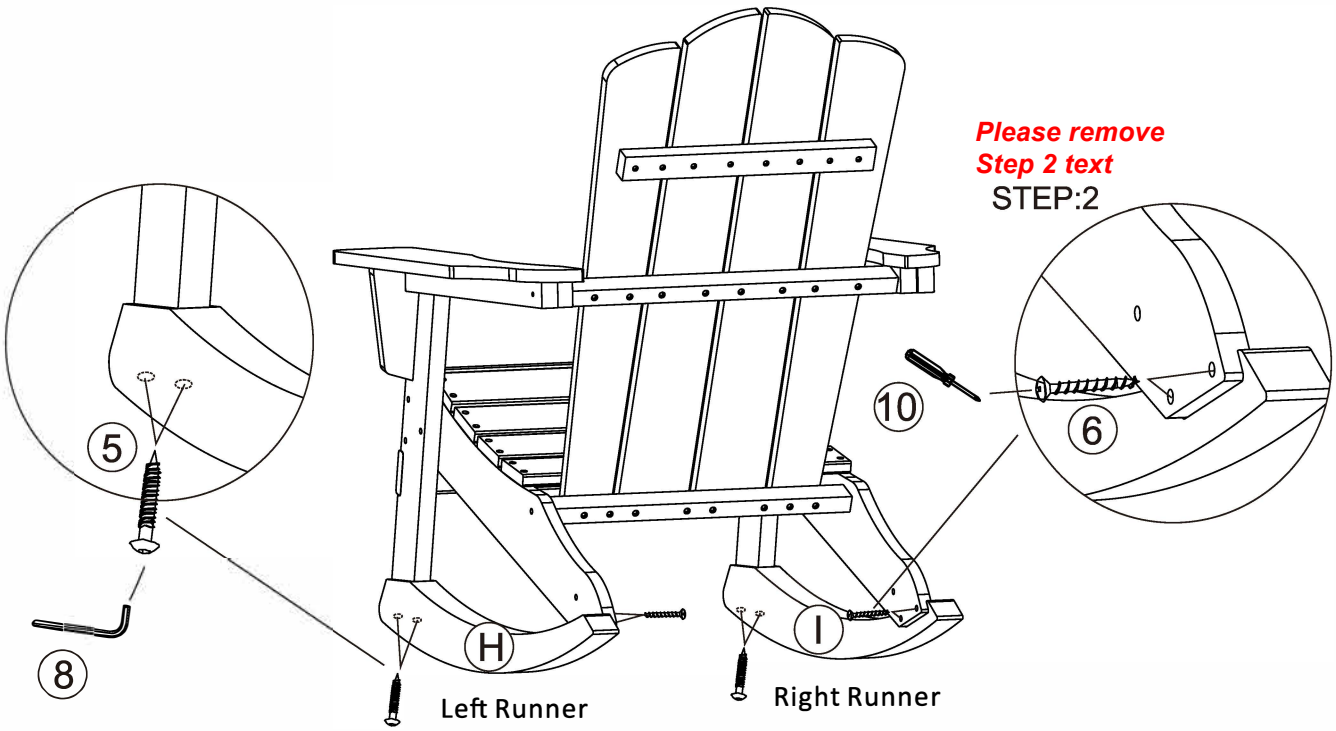

 Please remove page number

STEP:5

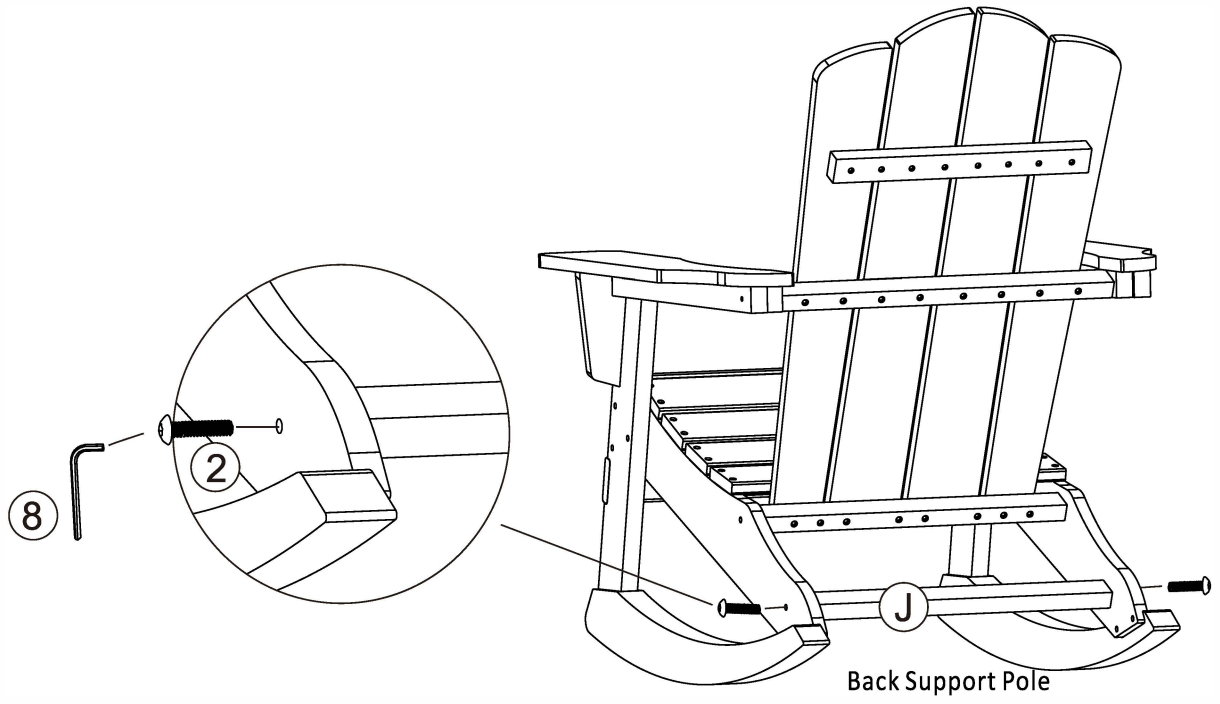

STEP:6

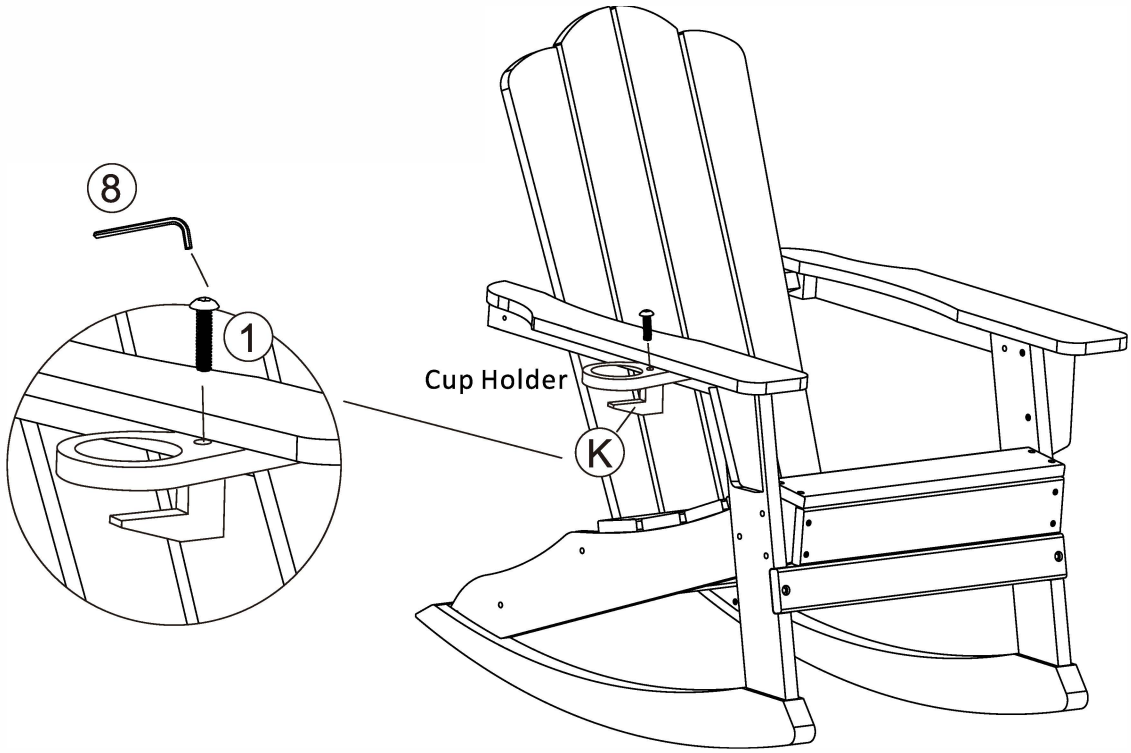

Quality and Safety Guidelines:

- Please follow the static and dynamic weight capacity limits provided on this item. If you are unsure of the weight capacities for this product, email us at customerexperience@belnick.com or call 866-552-2810.

- Please use this item on a stable, level surface only. All chair legs should contact the flooring surface when in use.

- To prevent pinching or crushing injuries, ensure that the area beneath the curved rockers is clear before the chair is set into motion.

- This chair is intended for gentle rocking motions, do not use excessive force during backward or forward movement to prevent accidental tipping.

- For maintenance instructions and replacement parts, please email us at customerexperience@belnick.com or call 866-552-2810.

- This item is intended for sitting only, do not climb or stand on this item.

- For product longevity, product safety and product integrity, protect from extended periods of wet weather and store indoors in a dry location. For additional storage instructions, please email us at customerexperience@belnick.com or call 866-552-2810.

- Please visit www.Belnick.com for our product warranty details or email us at customerexperience@belnick.com or call 866-552-2810.