P-Trap Installation:

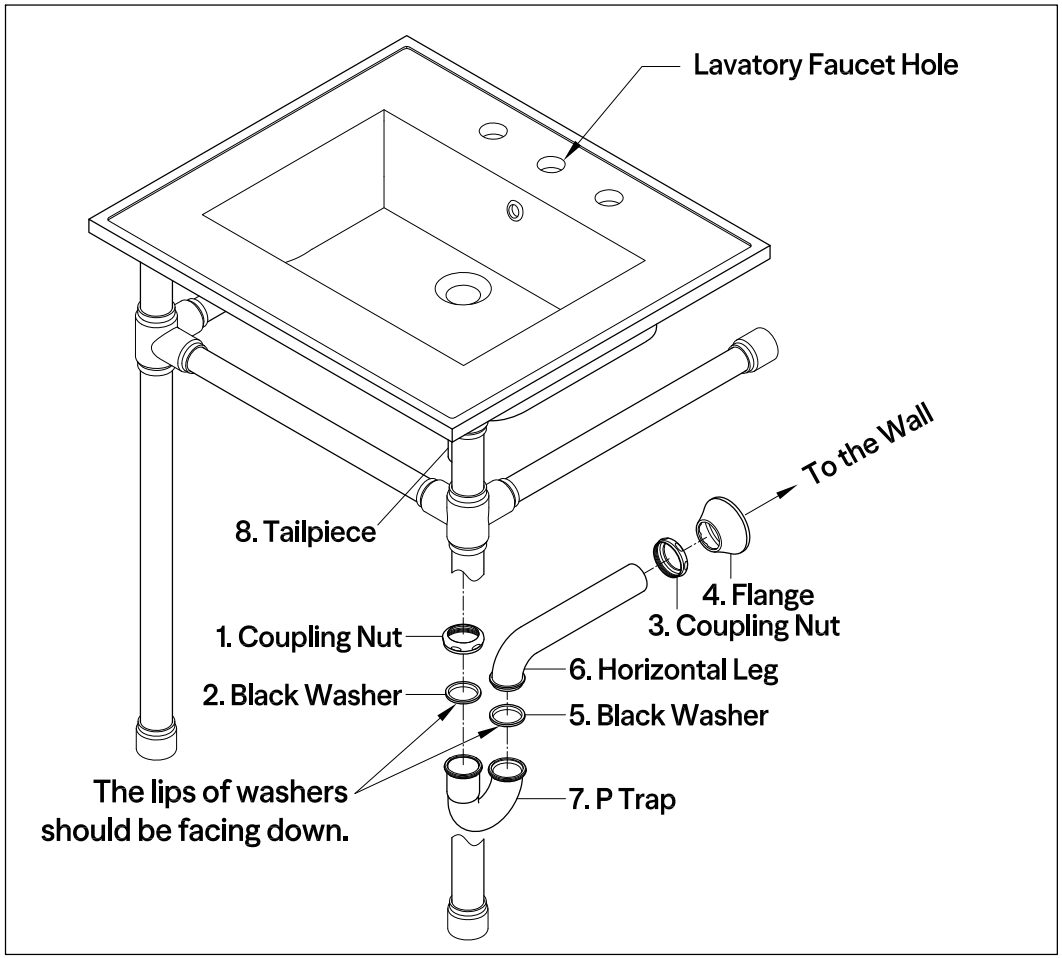

1. Insert horizontal leg (6) into wall drain stub-out.
2. Remove coupling nut (1) and black washer (2) from the P-trap (7) .
3. Insert coupling nut (1) and black washer (2) onto the tailpiece (8), make sure the lip of washer is facing down.
4. Attach P-trap to the tailpiece (8). Slowly and carefully move the black washer (2) down to touch the inlet of P-trap (7) by hand. Then tighten up the coupling nut (1).
5. Align P-trap (7) with horizontal leg (6) and tailpiece (8), at this point it may be necessary to cut part of tailpiece (8) or part of horizontal leg (6) to obtain proper alignment.
6. Check if all components are properly tightened.
7. Run water. If leaks appears and tightening doesn't correct it, loosen coupling nuts (1) or (3), check black washers (2) and (5) are properly installed. Retighten coupling nuts (1) or (3).

KINGSTON

FAUCETURE

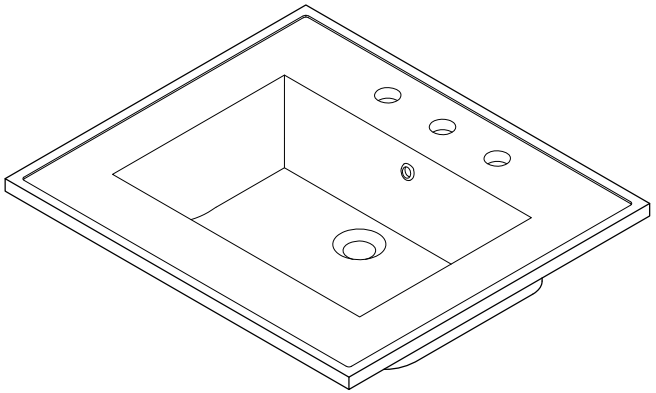

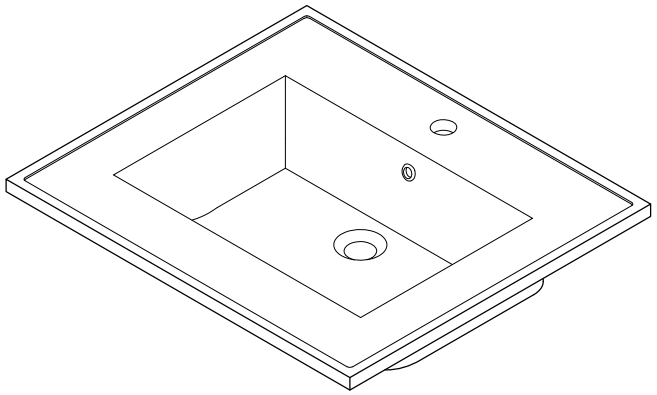

⚠CAUTION

Failure to follow all installation directions may cause product to detach from the wall and cause serious injury

NOTICE

Failure to follow all directions may cause leaks which may result in water damage

www.kingstonbrass.com

TOLL-FREE CUSTOMER SERVICE: 1-877-2-KBRASS
TECHNICAL SUPPORT E-mail: service@kingstonbrass.com
12775 Reservoir Street, Chino, CA 91710



KINGSTON

FAUCETURE

Console Sink Legs
Installation Instructions

Before Installation :

1. Before beginning the installation of your console pedestal basin, it is important to identify the type of wall where the pedestal will be installed and prepare the installation location accordingly.
2. Install an anchoring brace in the wall prior to installing the drywall, this can be a 2" x 6" piece of wood that will fit between the two studs, then install drywall and finish as usual. Due to the excessive weight of this pedestal it should not be mounted on drywall unless it is properly secured to the anchoring brace.
3. For safety concern, make sure your sink has proper wall mounting parts or brackets to fix the sink on wall.
4. For maximum weight capacity, we recommend that you can use our bracket # VSPLBRKT as shown in the last page.

Installation Step :

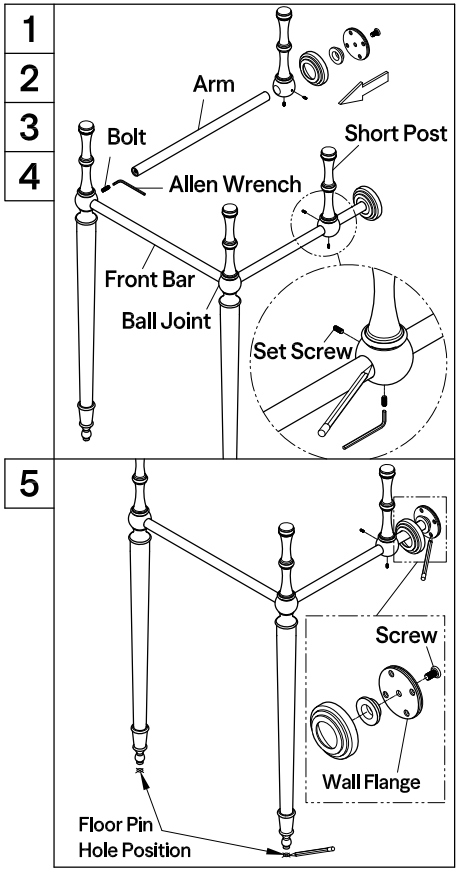

1. Join the two vertical leg supports by inserting the front bar and securing the front bar by tightening the bolts with Allen wrench, then assemble the left and right arms onto the vertical leg supports with the bolts, make sure the two arms go inside to the ball joints completely.
2. Insert the two short post into the arms, properly adjust its position as required for your basin then mark its position with a pencil.
3. Secure the wall flanges onto the two arms as shown on drawings.
4. Place the leg support assembly at the location where the console basin will be installed. Adjust to make sure the vertical legs and short posts are plumb and horizontal arms are level.
5. Install the wall flange parts with the socket head screws as shown on drawing.
   Use pencil to mark the locations of drill holes for wall support flanges and floor pins.

Tools Required

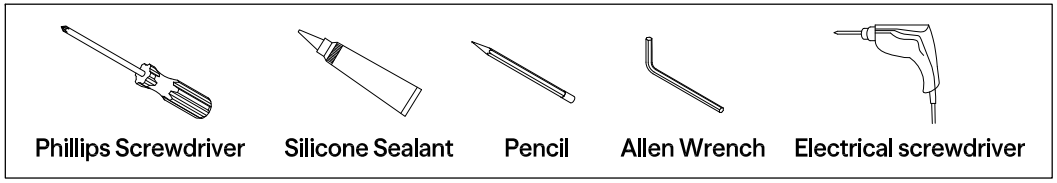

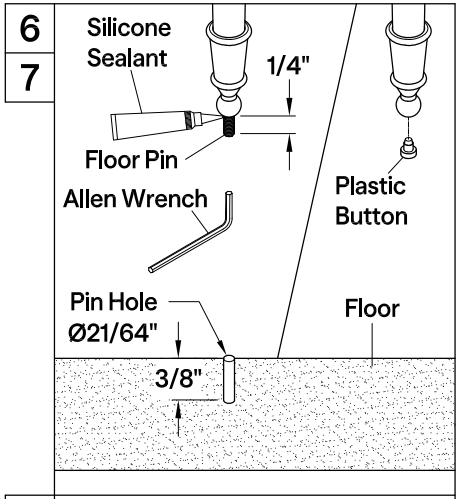

6. Remove the leg support assembly and drill the holes on floor to fit the floor pins.
   As an option, if you don't want to install the floor pins just insert the plastic buttons under the legs. Then the pin hole drilling is not needed.
7. Apply silicone sealant on one threaded end of the floor pin, secure it into the bottom of vertical legs with an Allen wrench. Make sure the floor pin protrude 1/4" from the bottom surface.

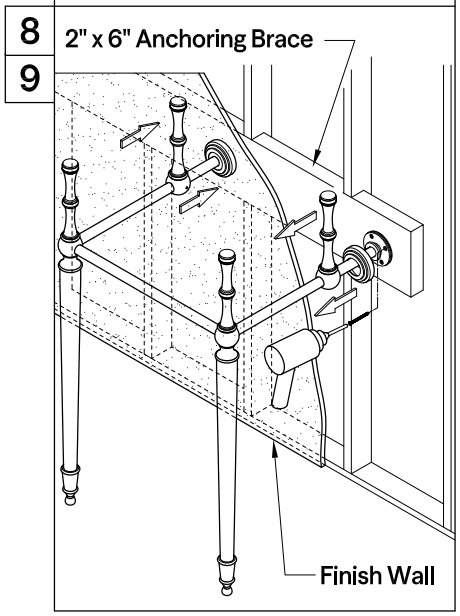

8. Move and adjust the position of the leg support assembly, so the two floor pins can completely go into the drilled holes on the floor. Loosen set screws on the short posts, then move the short posts and flange covers forward. Secure the leg support assembly to the wall by tightening all the wood screws on the wall flanges of the arms.
9. Move back the short posts and the flange covers to its original position, then adjust to be plumb and tighten up the set screws.

©2025 LVC Kingston LLC. All Rights Reserved.
2025-05-D

KINGSTON

FAUCETURE

Vanity Tops and Console Sink
Installation Instructions

Before Installation :

1. Prior the installation, unpack your new Kingston Brass product and inspect it keep the product in its original package until you are ready to install it.
2. Shut the water supply off when replacing an existing fixture. Preparation of the floors and walls, including all additional wall supports, maybe required.
3. Observe all local plumbing and building codes.
4. Do not install this fixture alone.
5. Make sure to select appropriate drain as some of Kingston Brass vessel sinks do not include overflow hole.

For Countertop Installation :

1

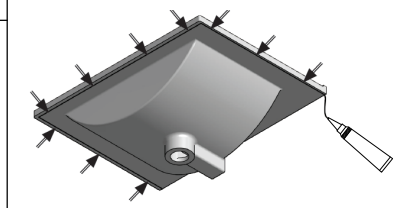

2
3
4
5

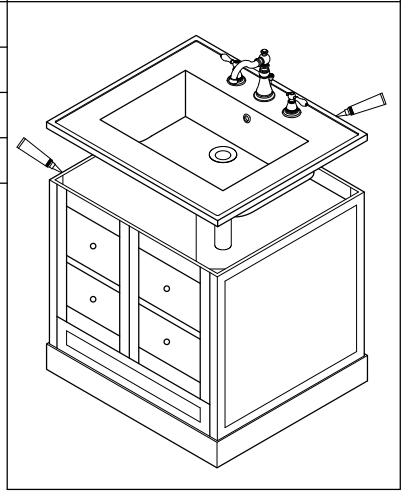

1. Before installing the basin, create a drip edge on its bottom side, apply a thin strip of silicone sealant as close as possible to the wash basin edge so that water flowing over the wash basin won't leak into the cabinet.
2. Place wash basin on cabinet and make sure its front is parallel with the front of the cabinet.
3. Install faucet and drain on the basin and place a layer of silicon sealant to the top edge of the cabinet vanity then Center the basin over the vanity. Press the basin evenly into the caulk.
4. Connect the water supply lines and install the drain (refer to P-Trap installation)
5. Clean excess silicone around the perimeter of the sink.

Tools Required

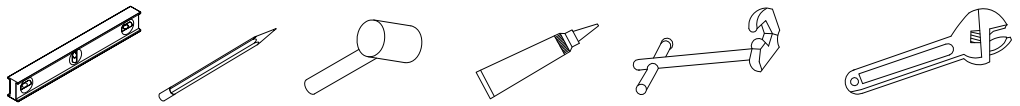

Lever | Pencil | Hammer | Silicone Sealer | Basin Wrench | Adjustable Wrench

For basin pedestal Installation:

1
2

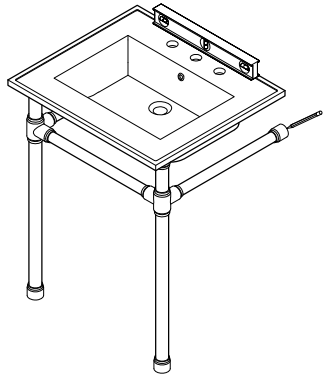

1. With the help of a second person gently place basin on top of pedestal and level.
2. Mark the location of the mounting bracket holes, also mark the location of the pedestal.

3
4

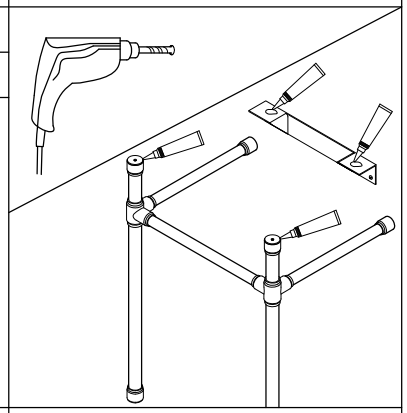

3. Remove basin and pedestal, drill holes for anchors at the marked locations and secure the pedestal and the bracket onto the wall.
4. Apply silicon sealant on the tops of the vertical legs and the top surface of bracket.

5
6

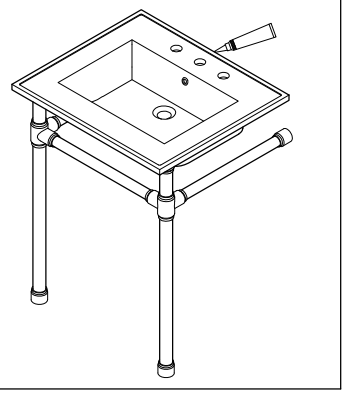

5. Gently place the basin on top of the pedestal and apply a bead of silicon sealant on the top edges of the basin.
6. Install faucet and drain on basin as per faucet manufacturer's instructions.

©2025 LVC Kingston LLC. All Rights Reserved.
2025-05-D